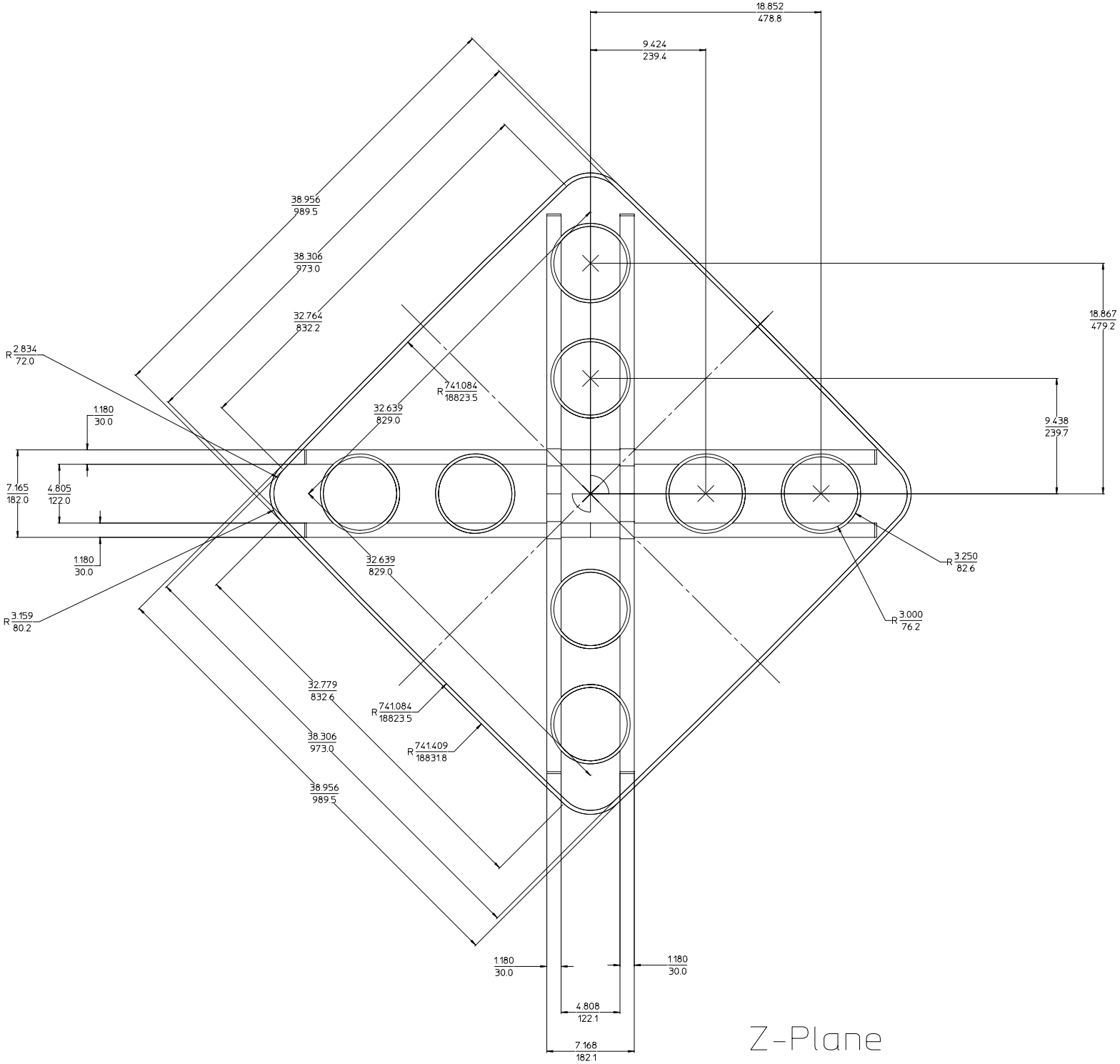
18.852
478.8
9.424
239.4
38.956
989.5
38.306
973.0
32.764
832.2
R 2.834
72.0
1.180
30.0
7.165
182.0
4.805
122.0
1.180
30.0
R 3.159
80.2
32.639
829.0
R 741.084
18823.5
32.639
829.0
18.867
479.2
9.438
239.7
R 3.250
82.6
R 3.000
76.2
32.779
832.6
R 741.084
18823.5
38.306
973.0
R 741.409
18831.8
38.956
989.5
1.180
30.0
1.180
30.0
4.808
122.1
7.168
182.1

Z-Plane