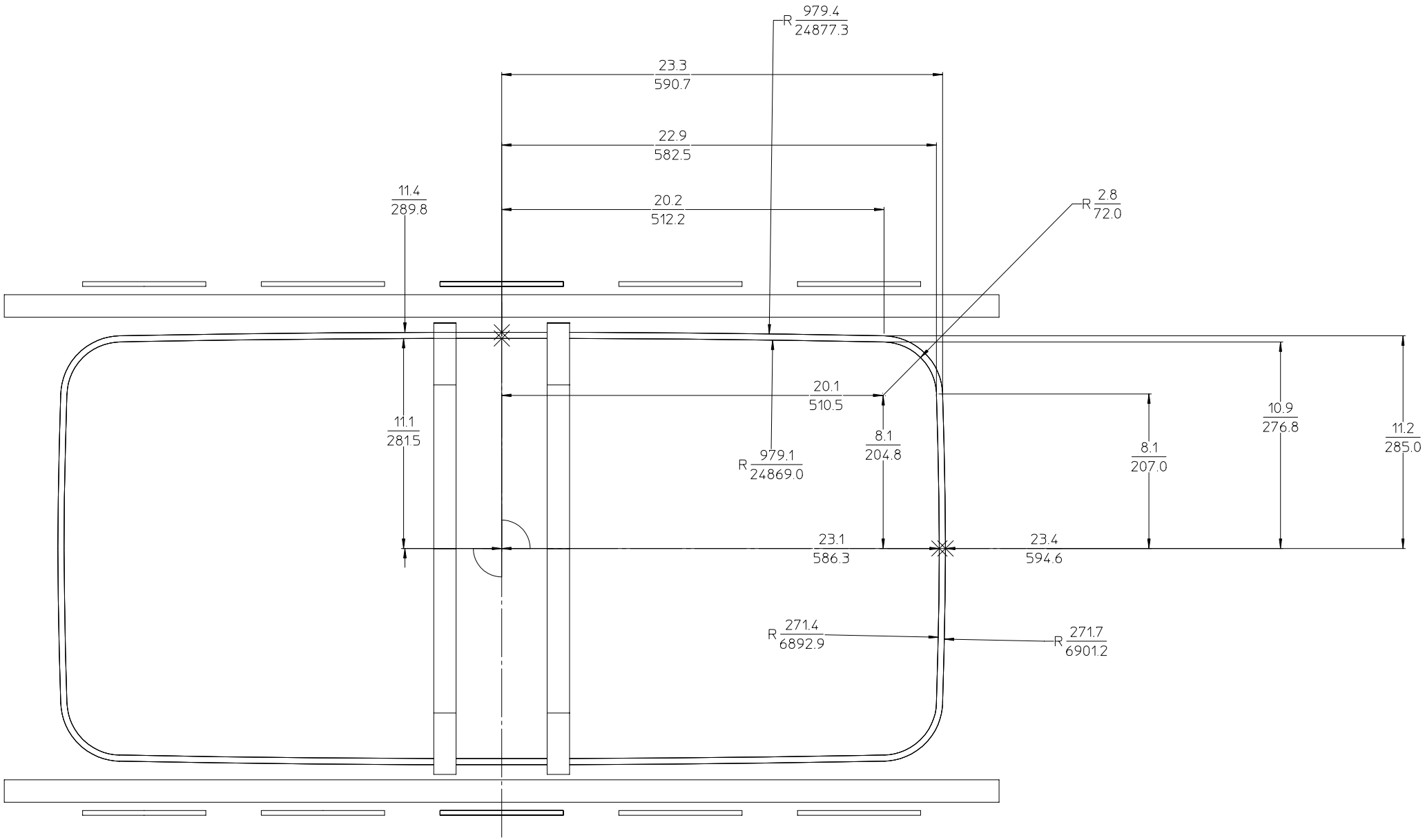
R 979.4 / 24877.3
23.3 / 590.7
22.9 / 582.5
11.4 / 289.8
20.2 / 512.2
R 2.8 / 72.0
20.1 / 510.5
11.1 / 281.5
8.1 / 204.8
R 979.1 / 24869.0
8.1 / 207.0
10.9 / 276.8
11.2 / 285.0
23.1 / 586.3
23.4 / 594.6
R 271.4 / 6892.9
R 271.7 / 6901.2

X-Plane