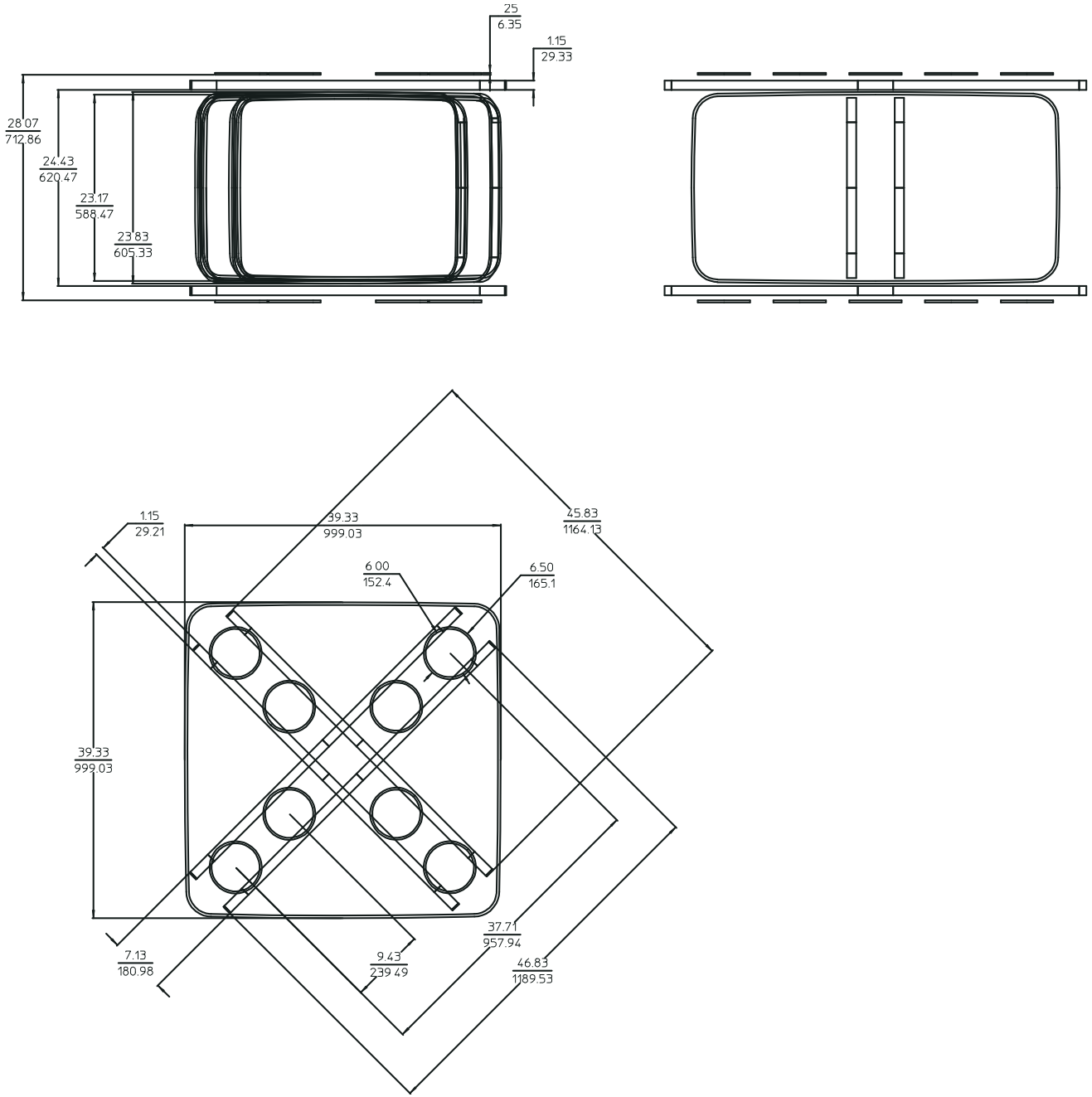
25
6.35
1.15
29.33
28.07
712.86
24.43
620.47
23.17
588.47
23.83
605.33
1.15
29.21
39.33
999.03
45.83
1164.13
6.00
152.4
6.50
165.1
39.33
999.03
37.71
957.94
7.13
180.98
9.43
239.49
46.83
1189.53