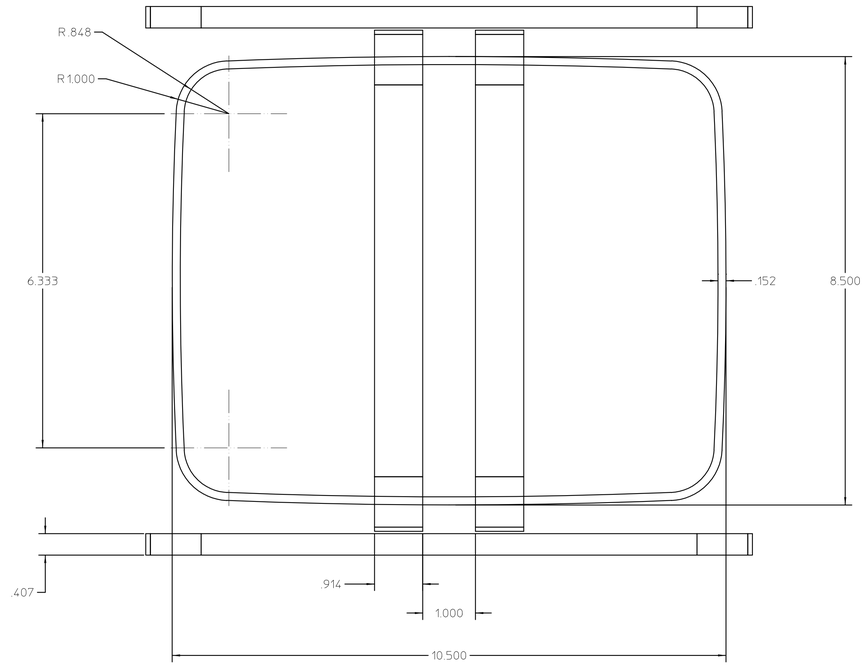

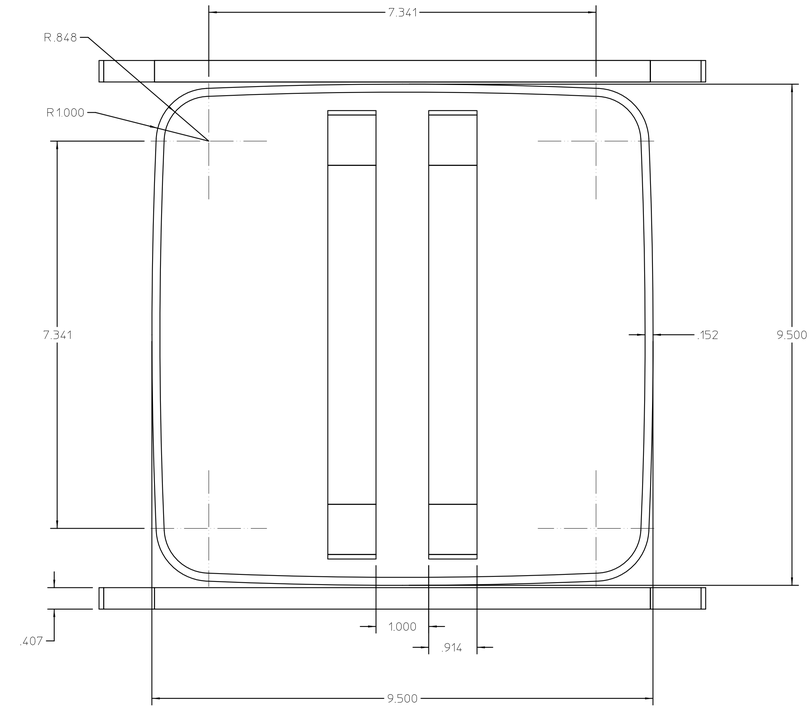

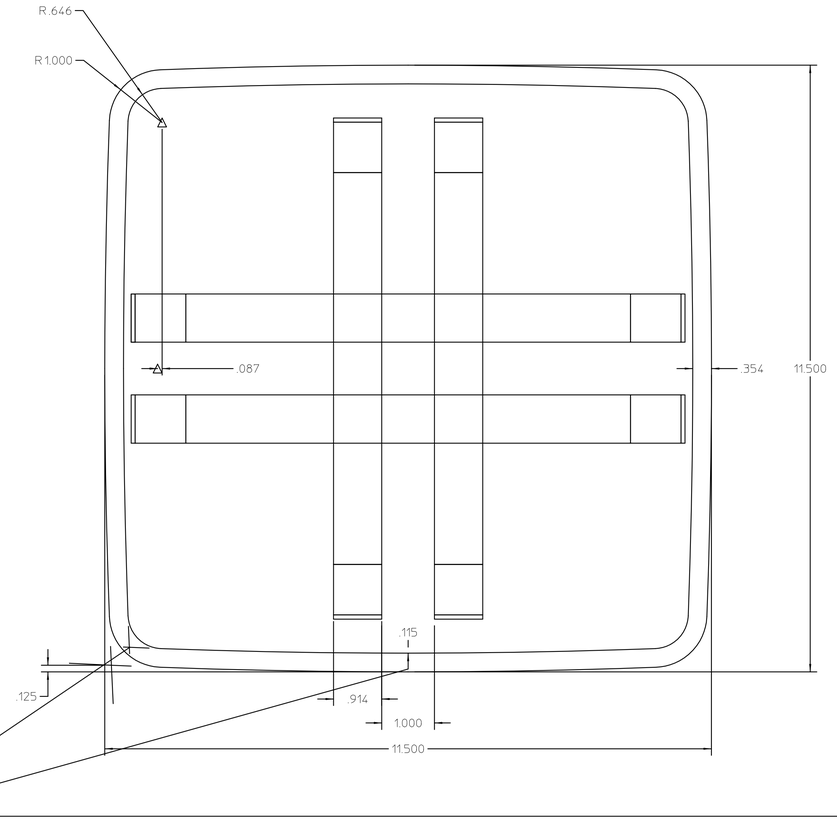

Tx-Set-Layout