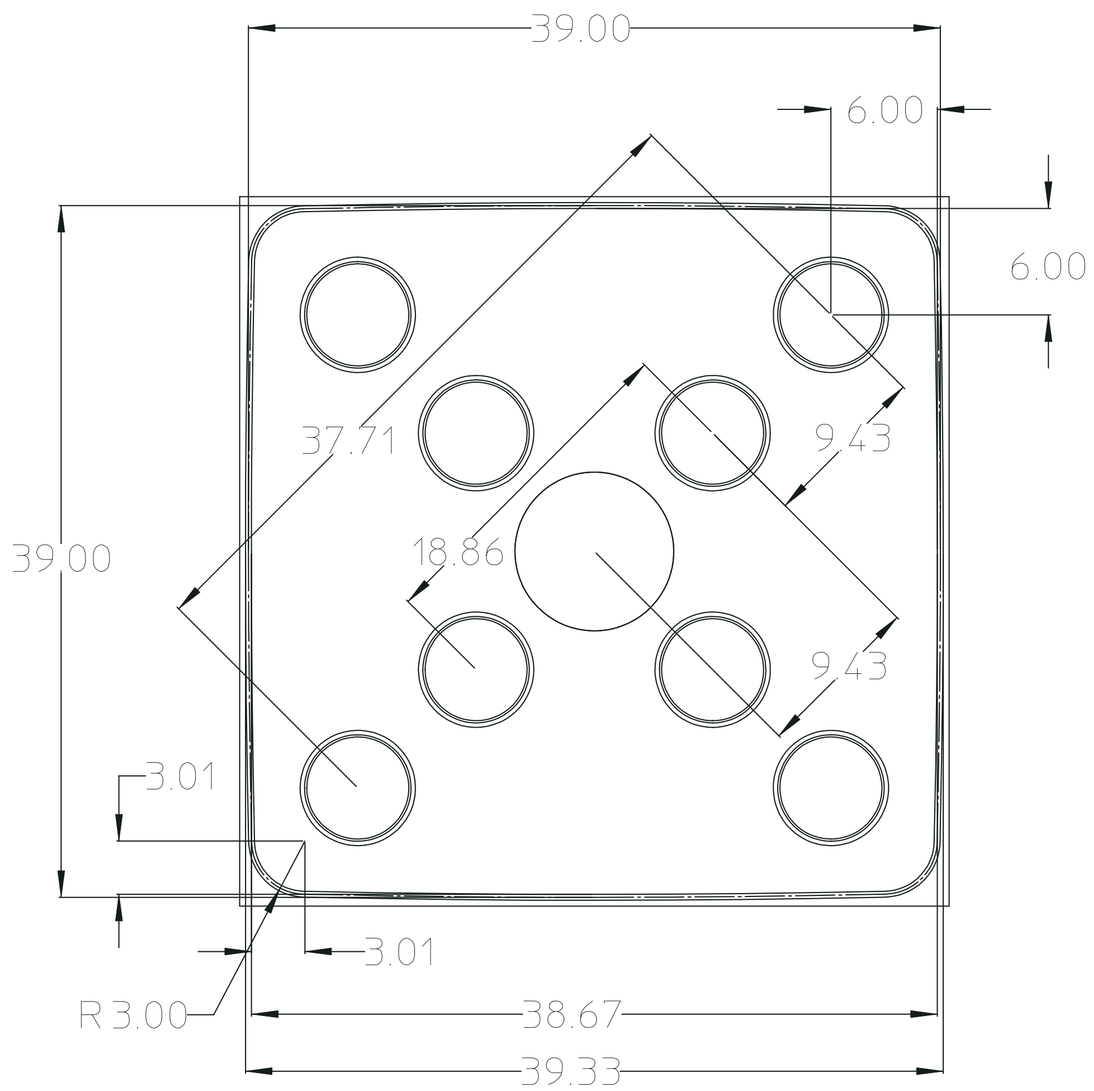

Rxs
Tx-Coil
Rx-Coil-Tall
Rx-Coil-Wide
Panel

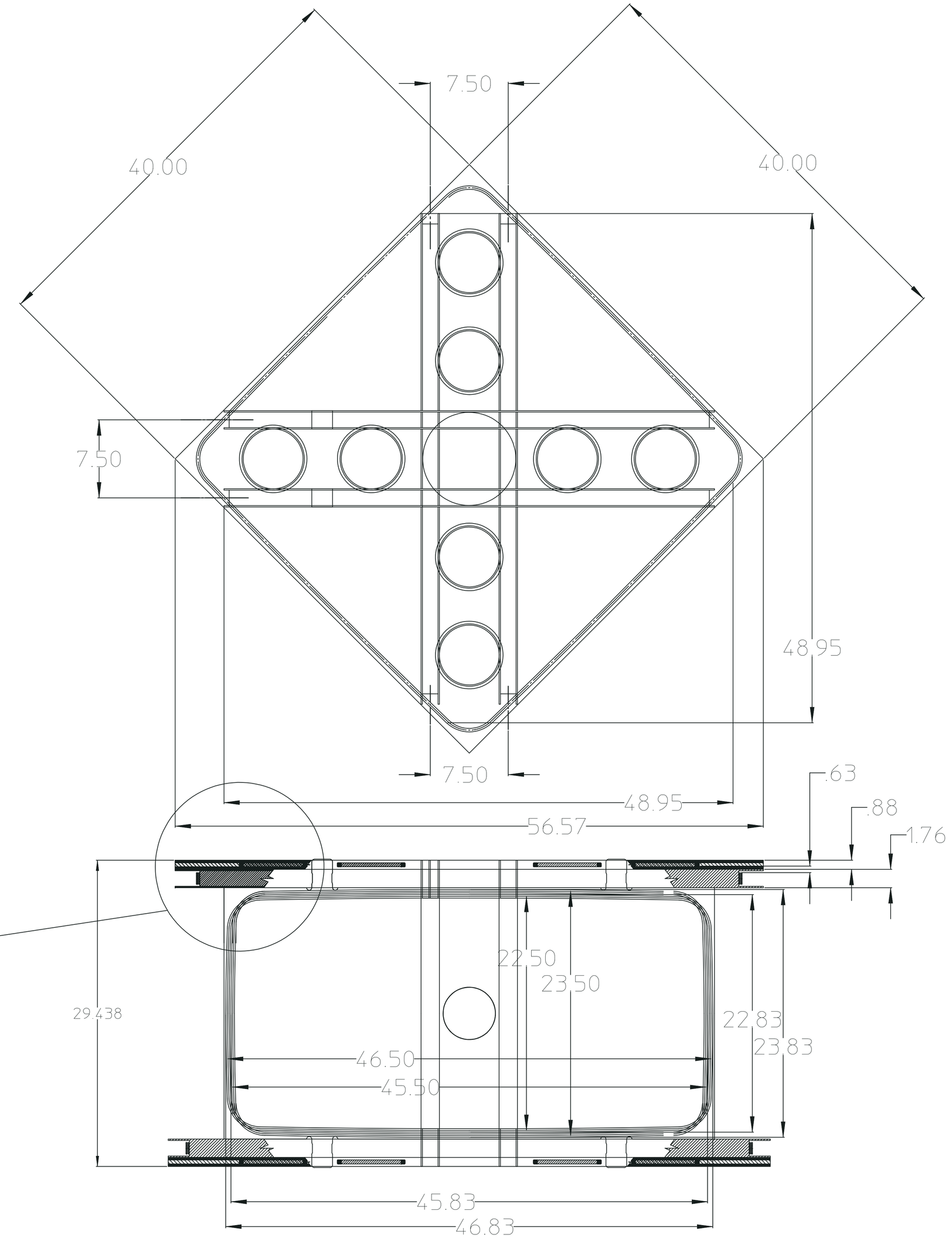

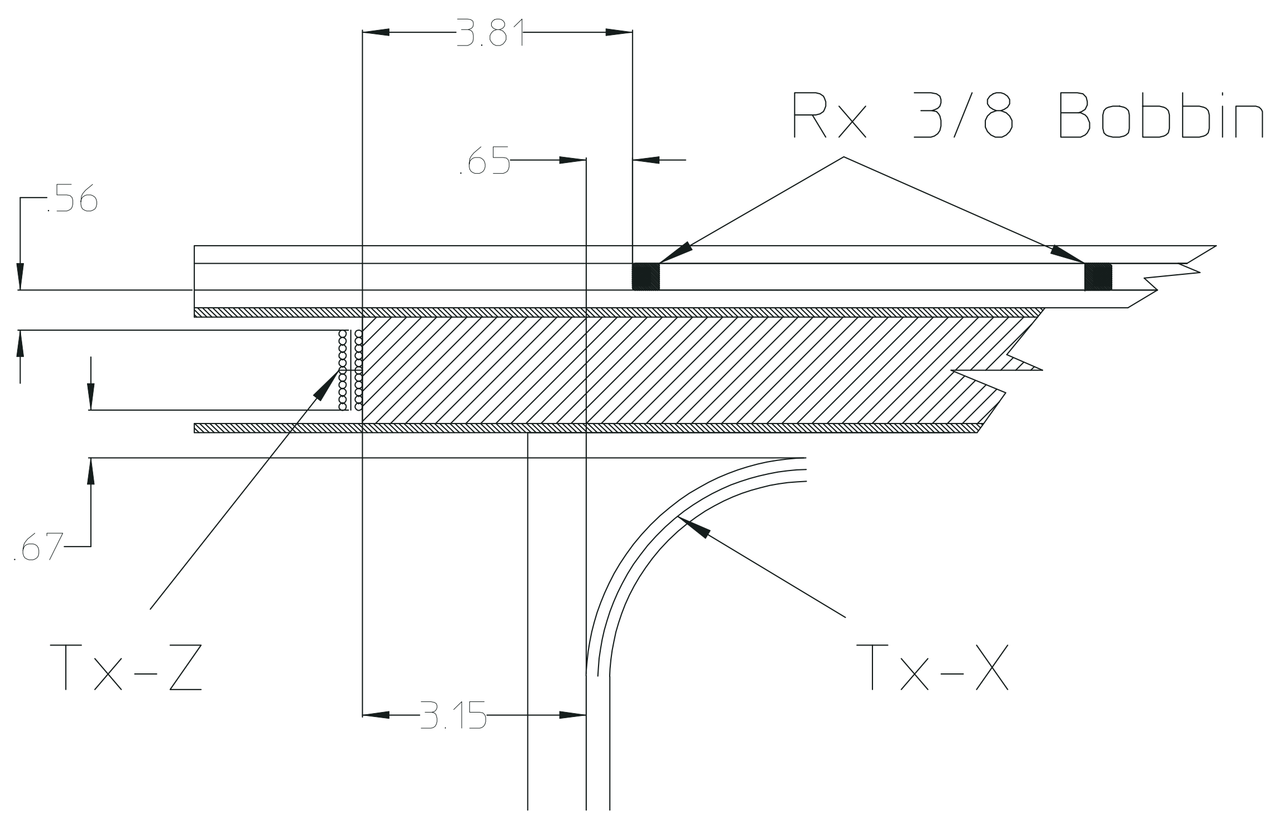

CoilSet_46-5x23-5-B.mi
Seperate Rx Layer, 7.5" Tx-X+Y Pair spacing