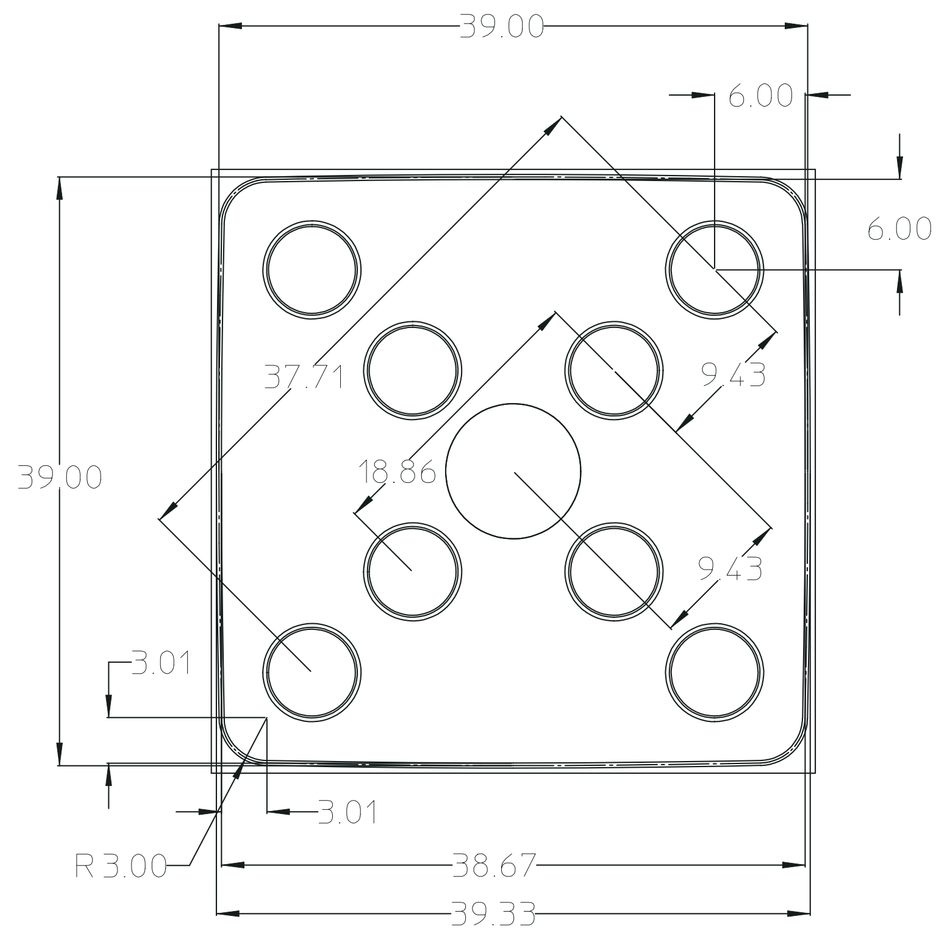

Rxs
Tx-Coil
Rx-Coil-Tall
Rx-Coil-Wide
Panel

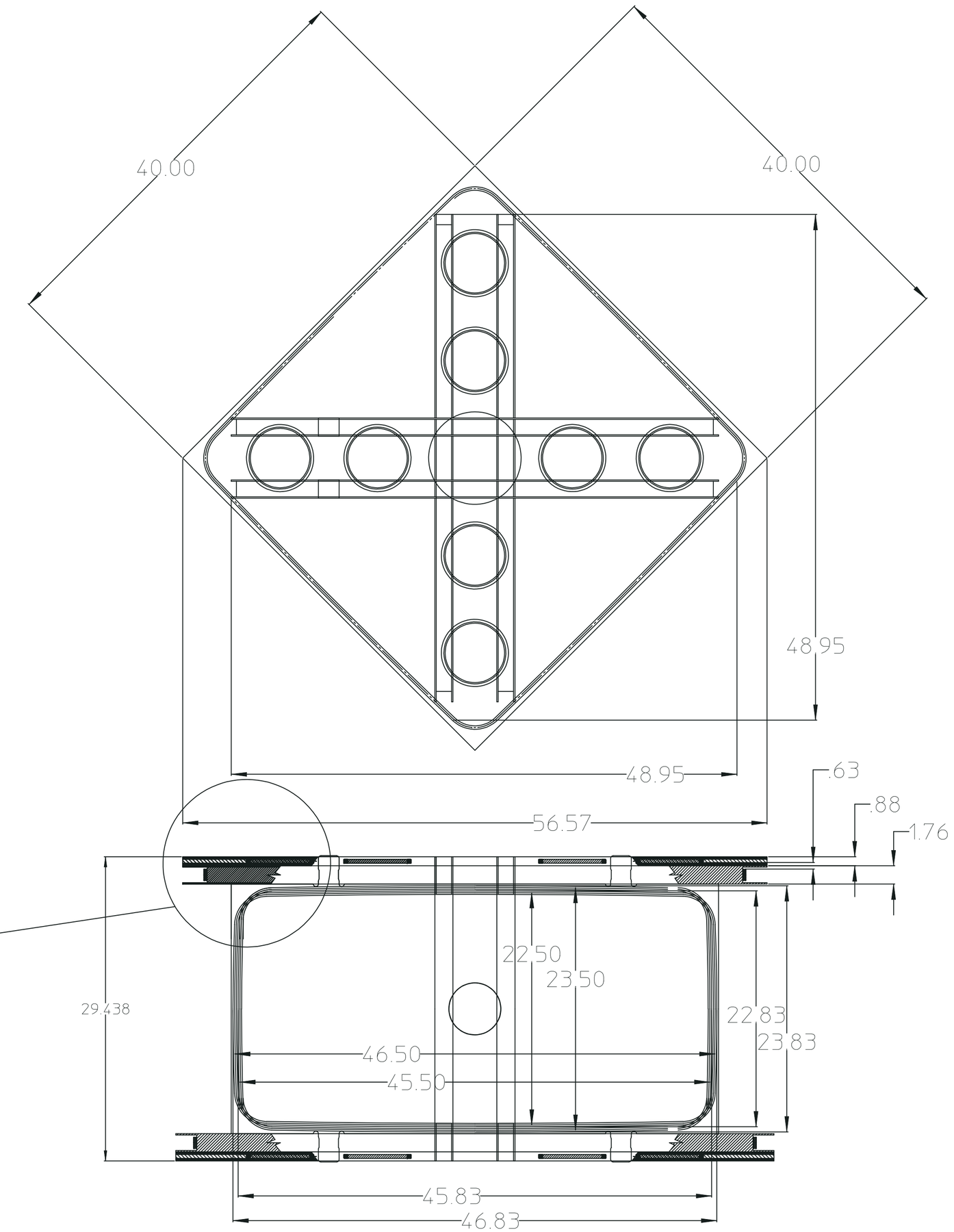

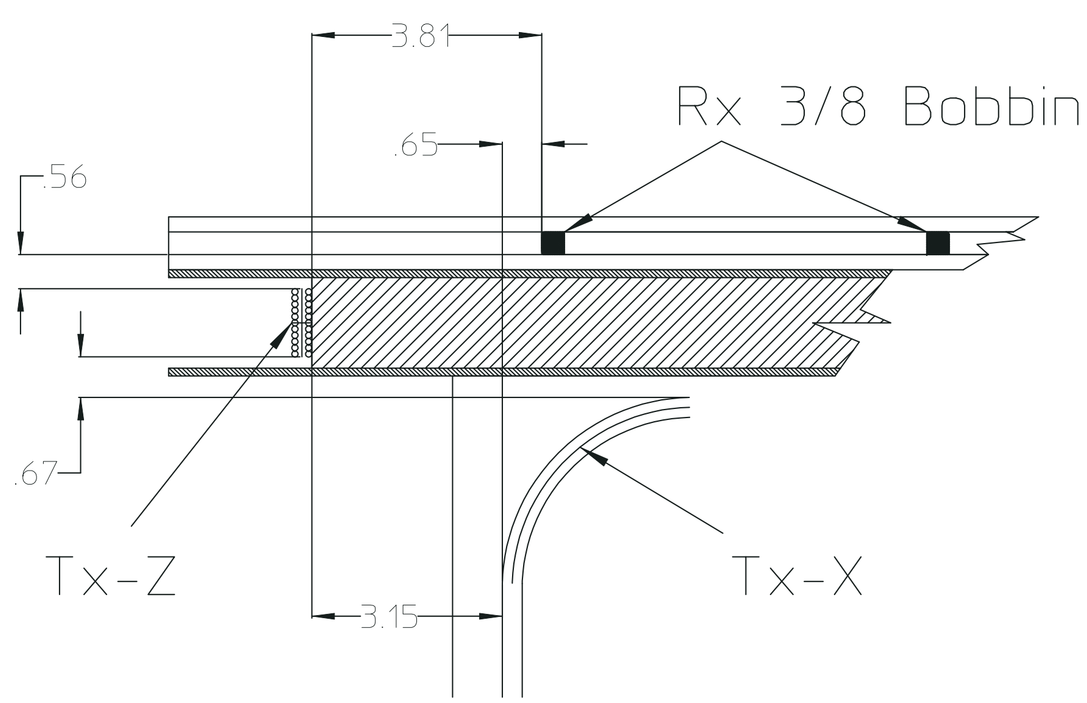

CoilSet_46-5x23-5.mi