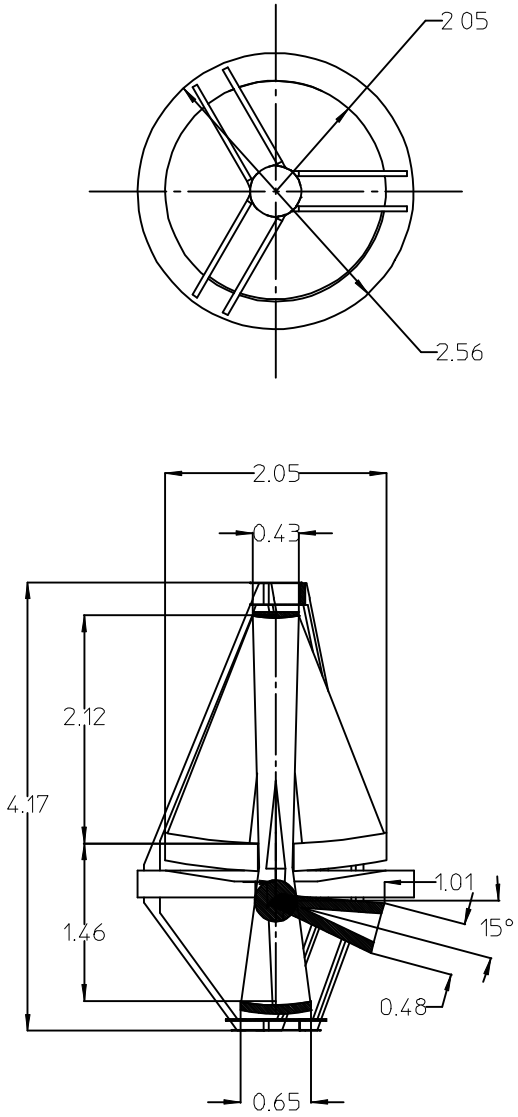

TMA-55_Rotated

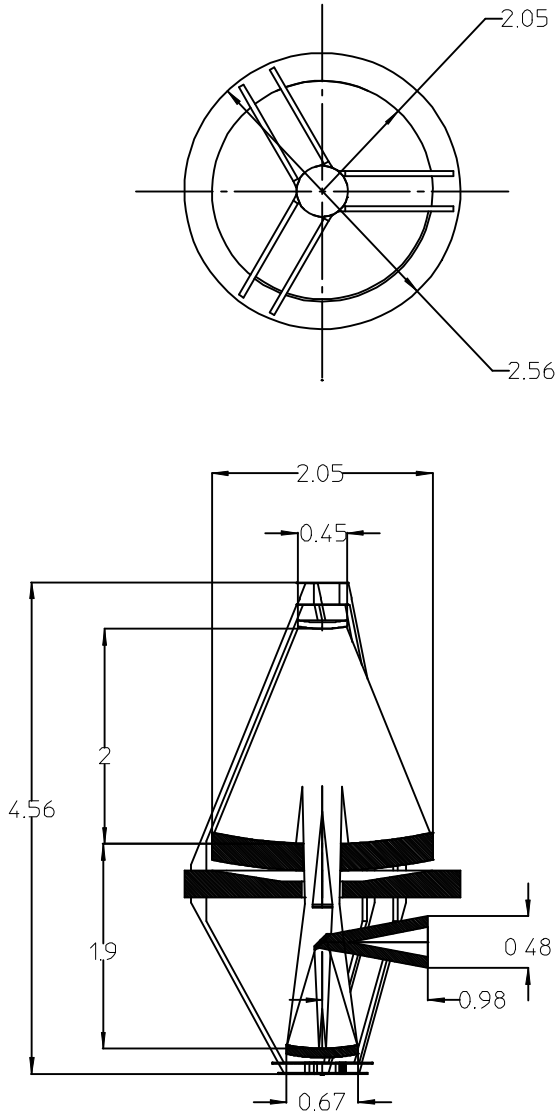

TMA-56_PV

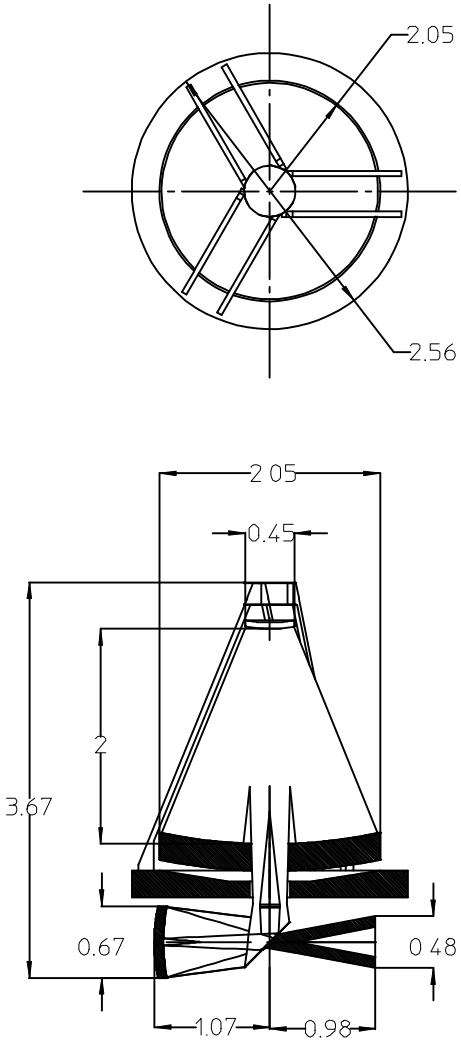
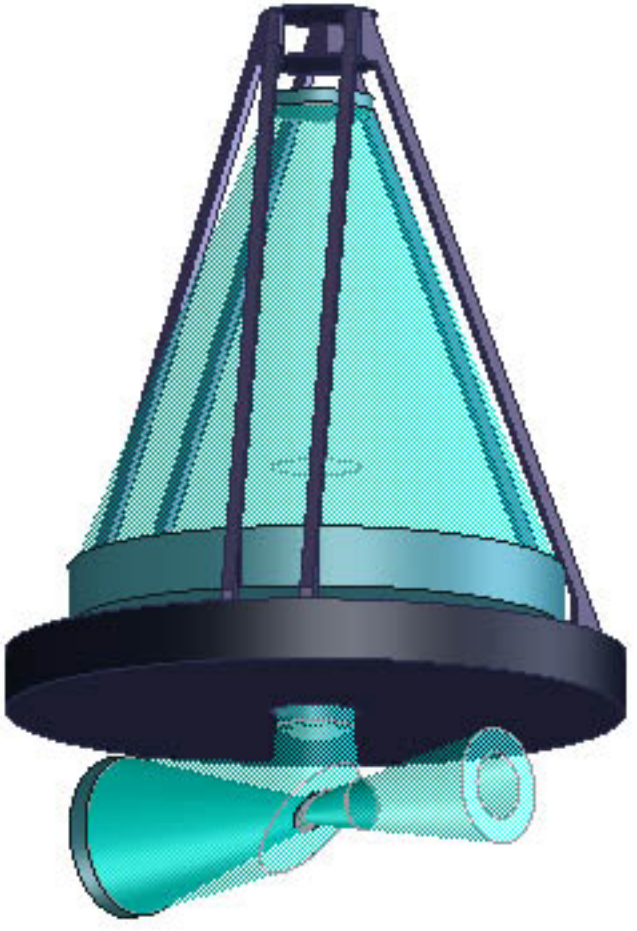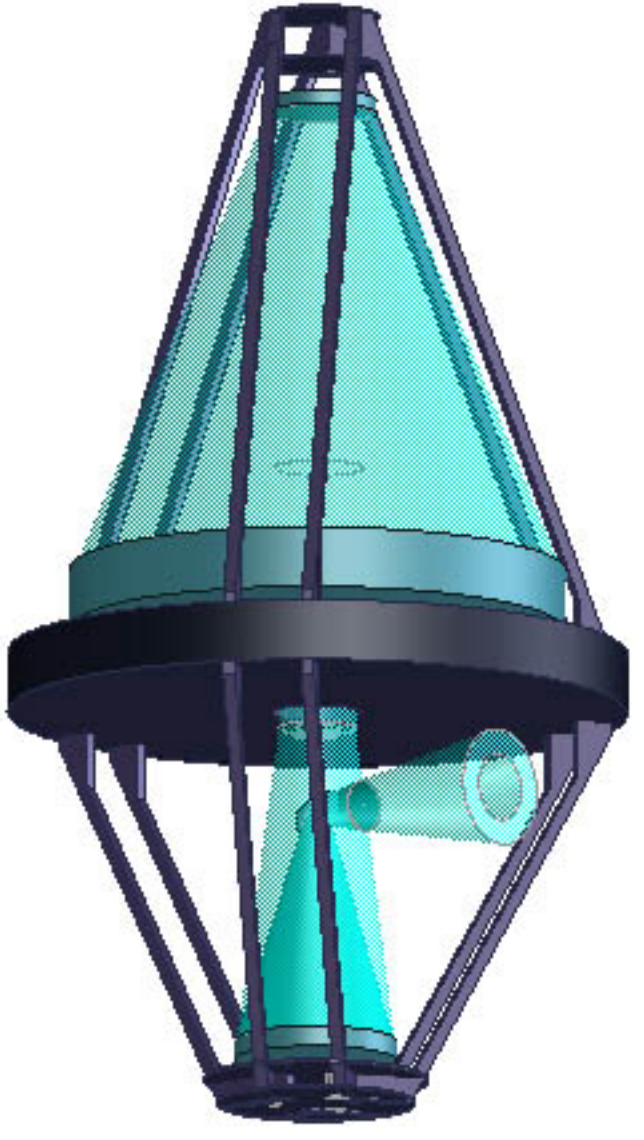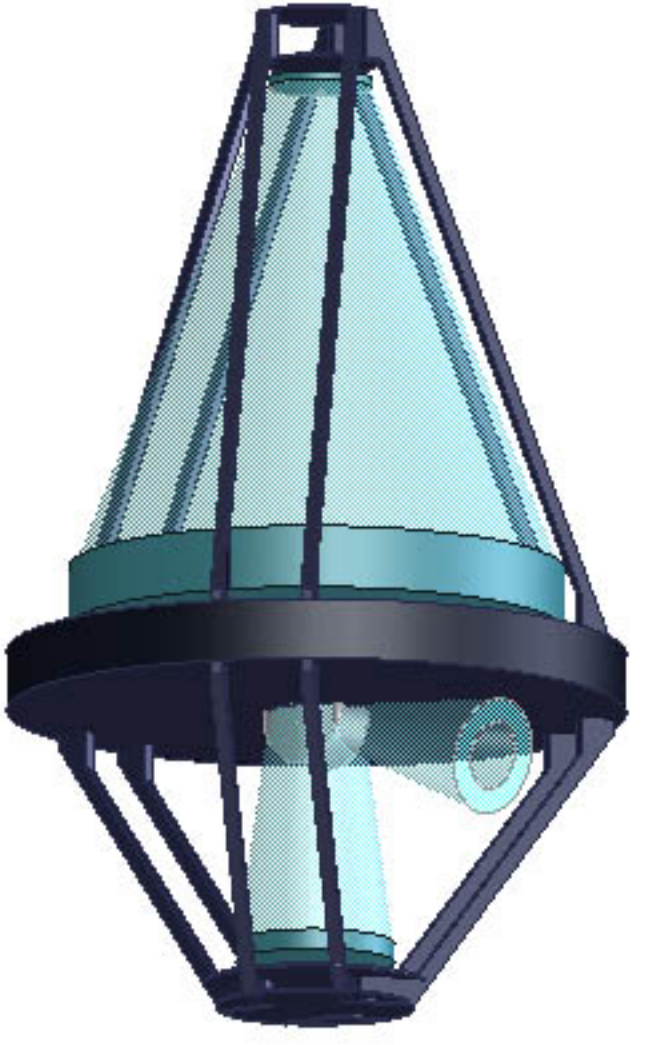
TMA-56_Bent