File: SN-6_Fitup.mi

Date: 15-Nov- 100 14:33:29

Author: lafever

Dir: //me56/lafever/mosaic/SNAP/Snap_6

SN-6 Fitup

Delta IV 4 meter fairing

TMA-55 Optics

6 strut "spider" metering structure

Gigacam Instrument Package

3 Single Channel Spectrometry packages

Mk3 Structural Package and BusS

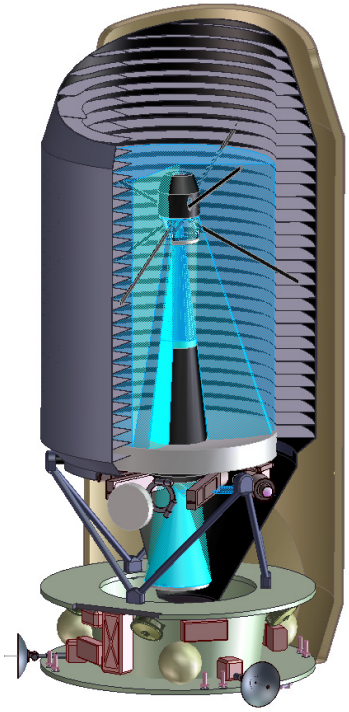

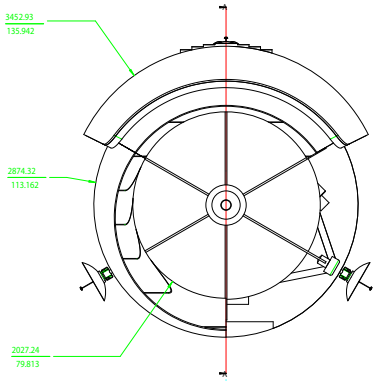

top1

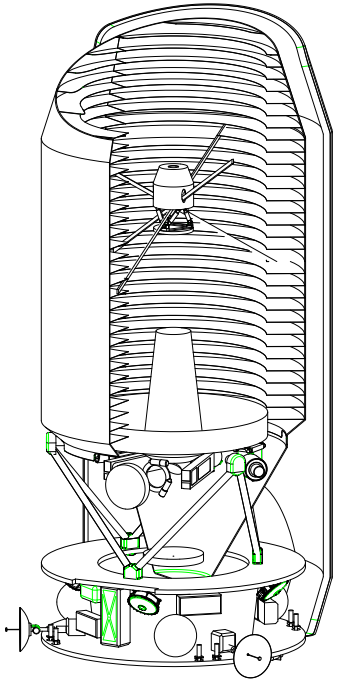

gen1

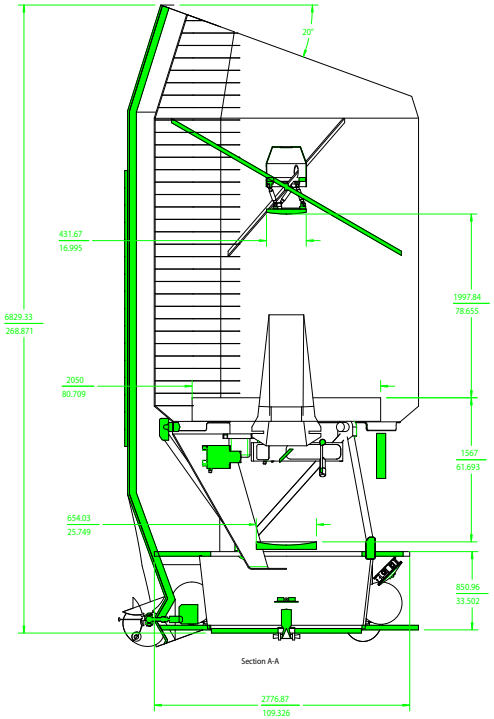

Section A-A

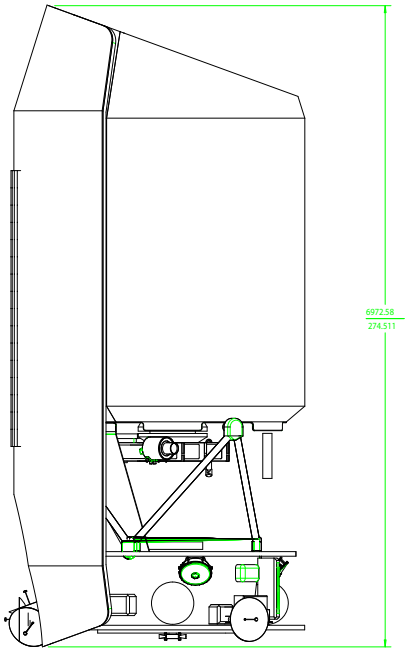

left1

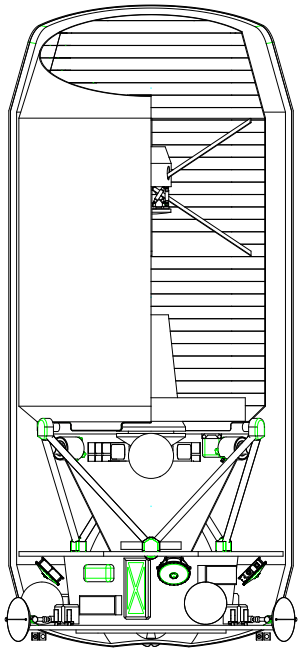

front1

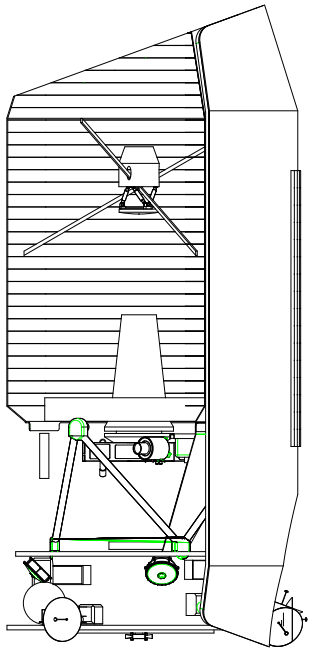

right1