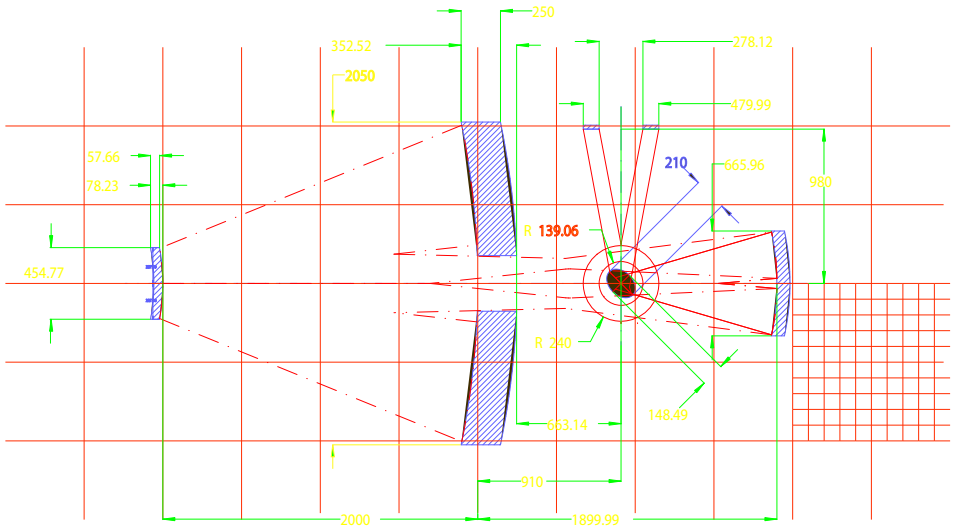

TMA-56_BeamEnvelope

TMA-56_BeamProfiles

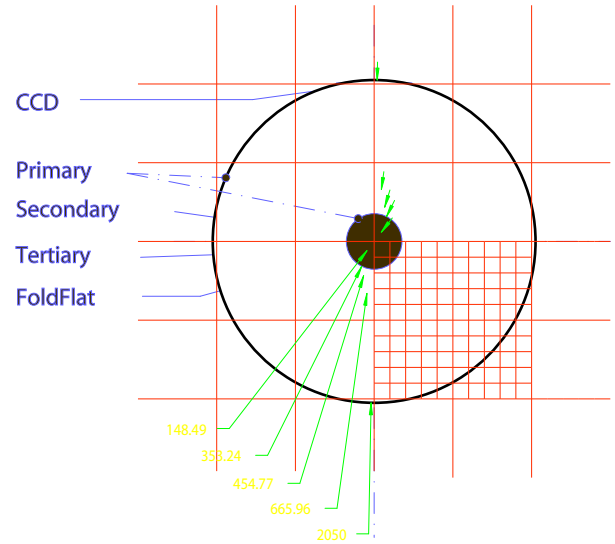

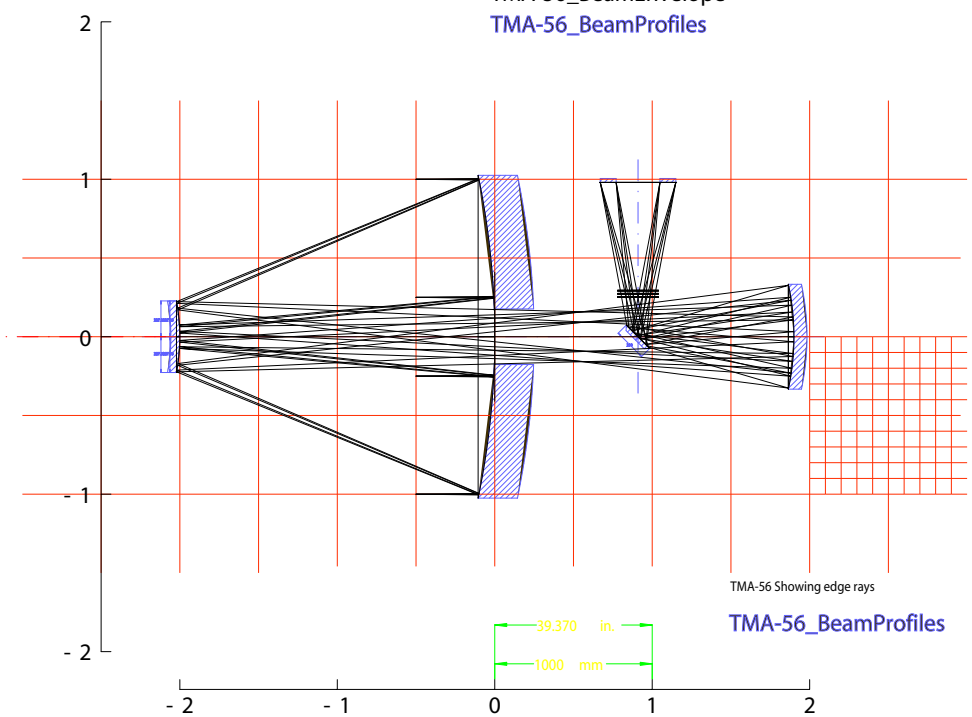

TMA-56 Showing edge rays

TMA-56_BeamProfiles

PARTS STRUCTURE

- TMA-56_Optica.mi
  - TMA-56_BeamEnvelope
  - TMA-56_BeamProfiles
    - Primary
    - Secondary
    - Tertiary
    - FoldFlat
    - CCD

File: TMA-56_Optica.mi
Date: 28-Aug- 100 19:06:49
Author: lafever
Dir: //me56/lafever/mosaic/SNAP/TS-Tma