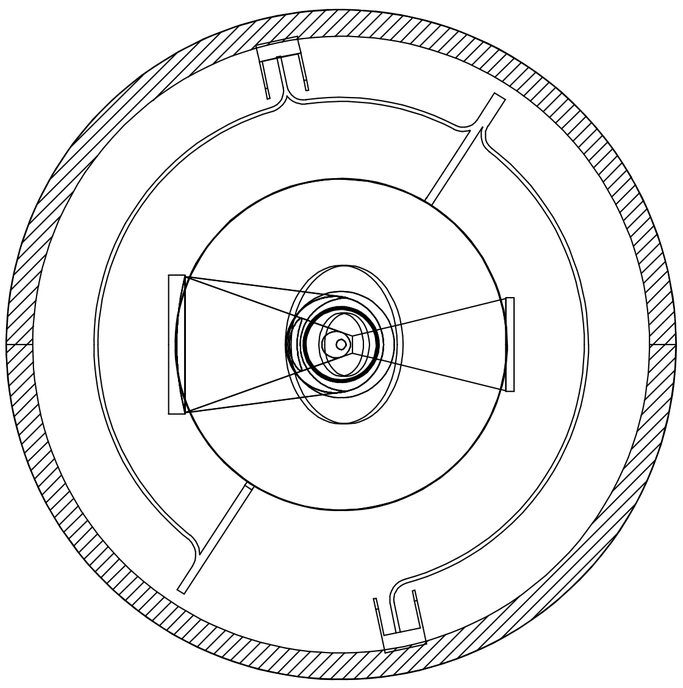

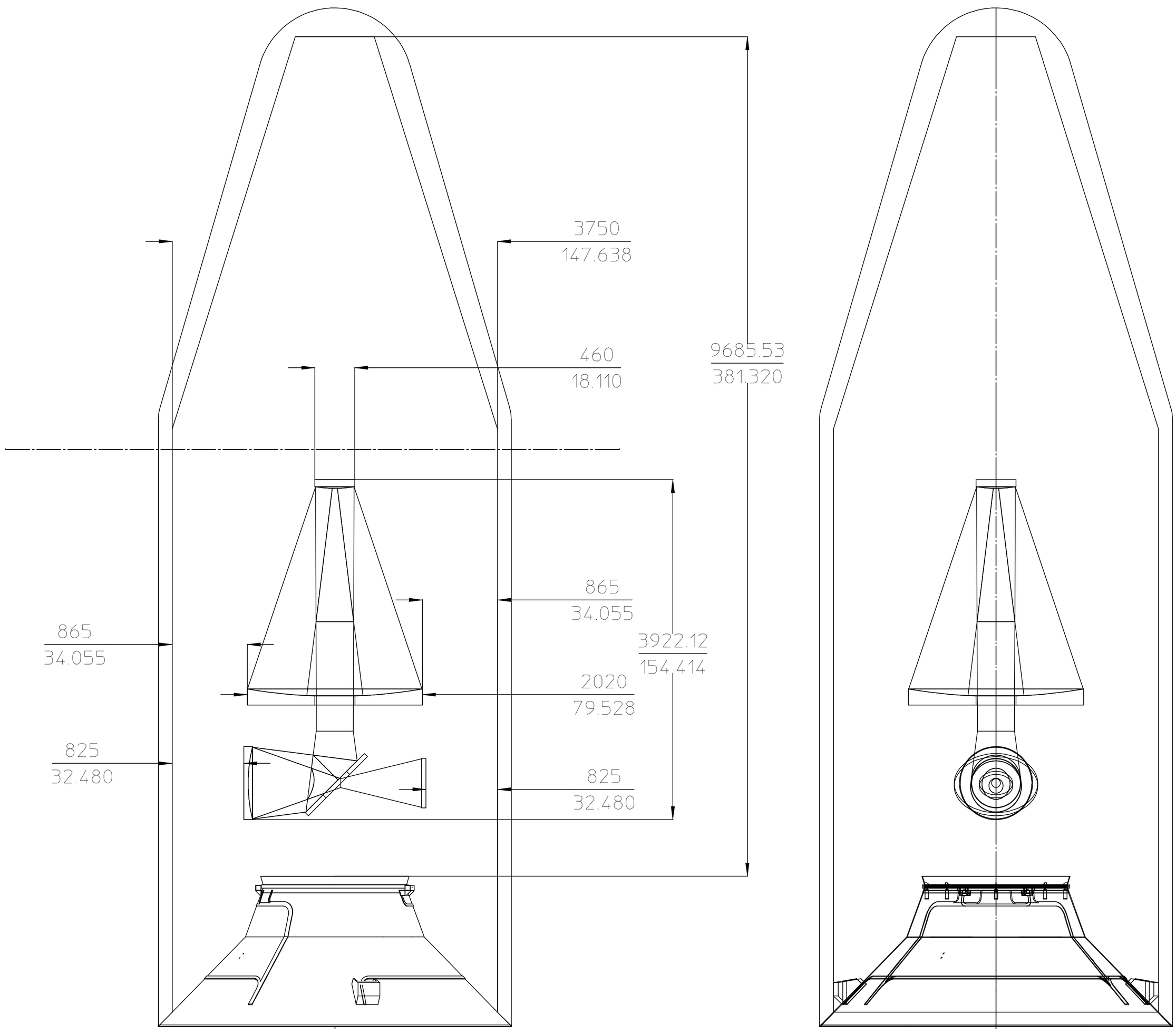
3750
147.638
460
18.110
9685.53
381.320
865
34.055
865
34.055
3922.12
154.414
2020
79.528
825
32.480
825
32.480