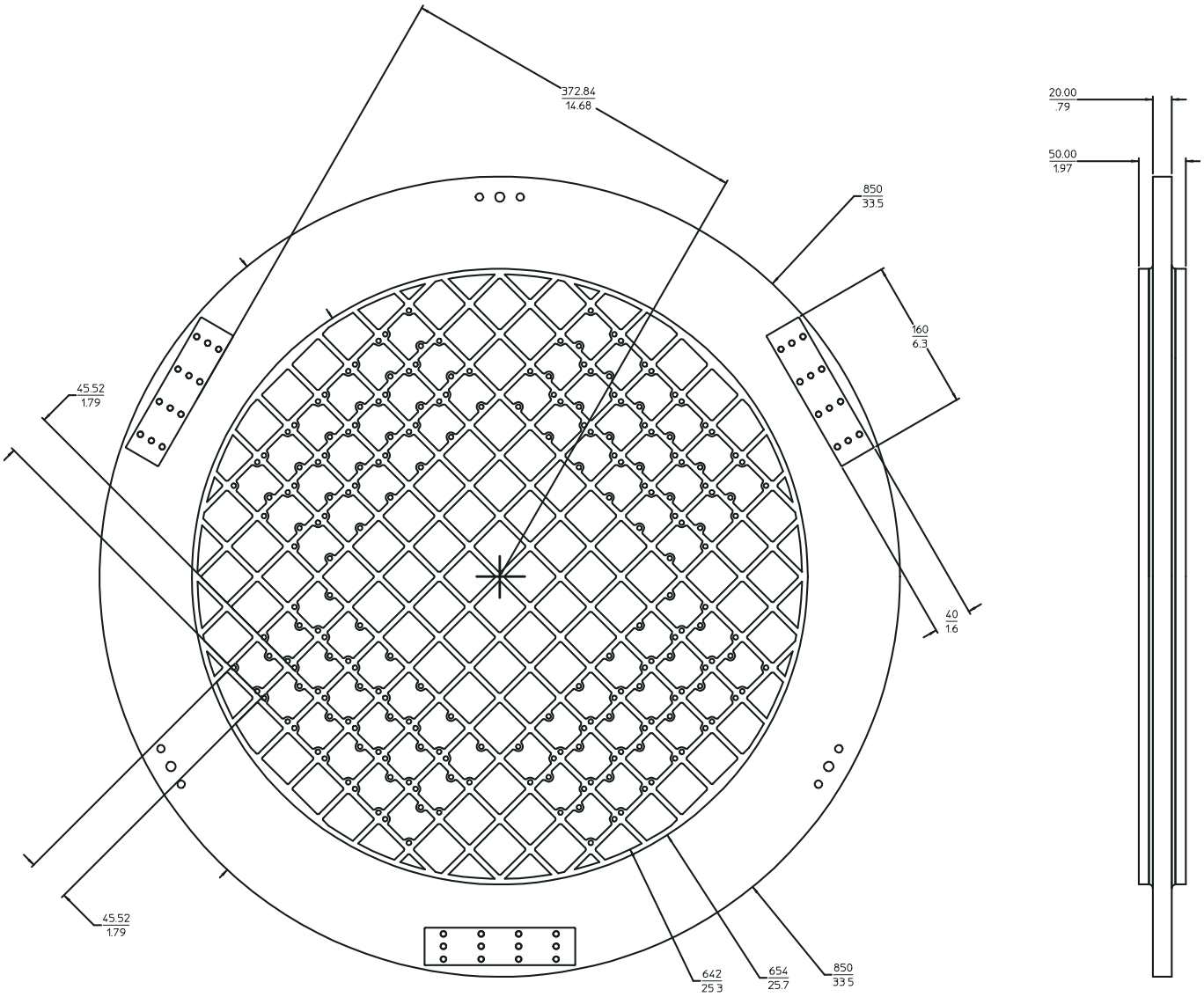
372.84
14.68
850
33.5
160
6.3
45.52
1.79
40
1.6
45.52
1.79
642
25.3
654
25.7
850
33.5
20.00
.79
50.00
1.97