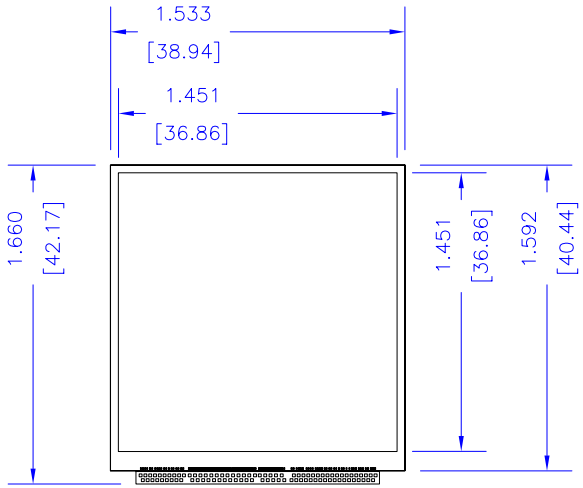

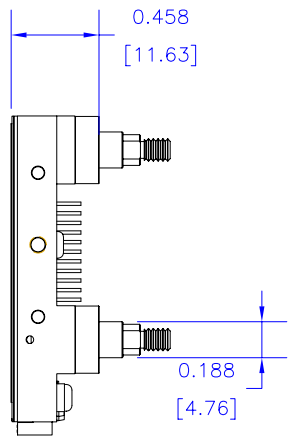

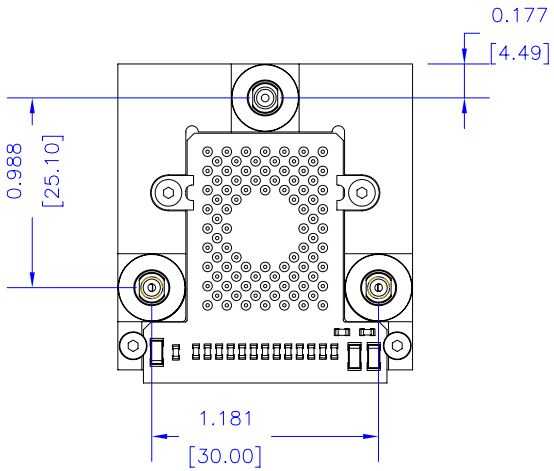

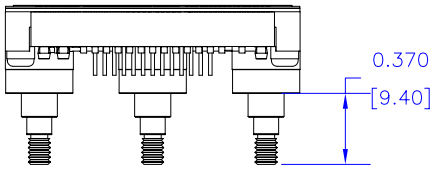

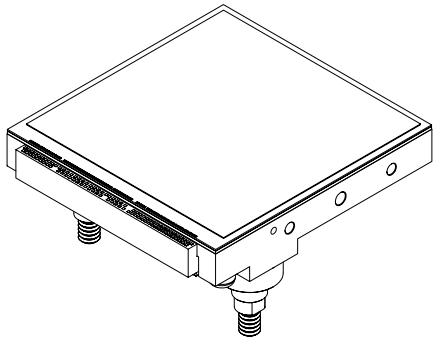

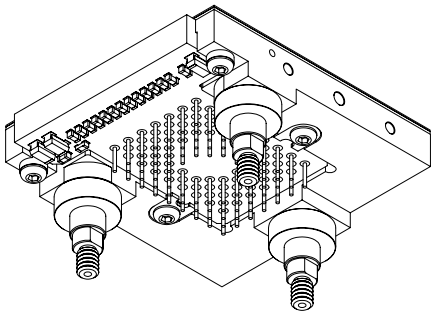

ALL DIMENSIONS IN INCHES [mm]

TOLERANCES

UNLESS OTHERWISE NOTED

.X	+/− 0.1
.XX	+/− 0.01
.XXX	+/− 0.002

GL SCIENTIFIC

2800 WOODLAWN DRIVE, SUITE 132, HONOLULU, HAWAII 96822

TEL/FAX: 808-373-7495

DWG: H2RG Package - 3-pt Mount - Assembly Interface Control Document

DESIGN: Luppino	SIZE A	PROJECT: GEST	DWG NO:	REV:
DRAWN: Luppino	DATE: 9 Apr 04	SCALE: FULL	SHEET:	