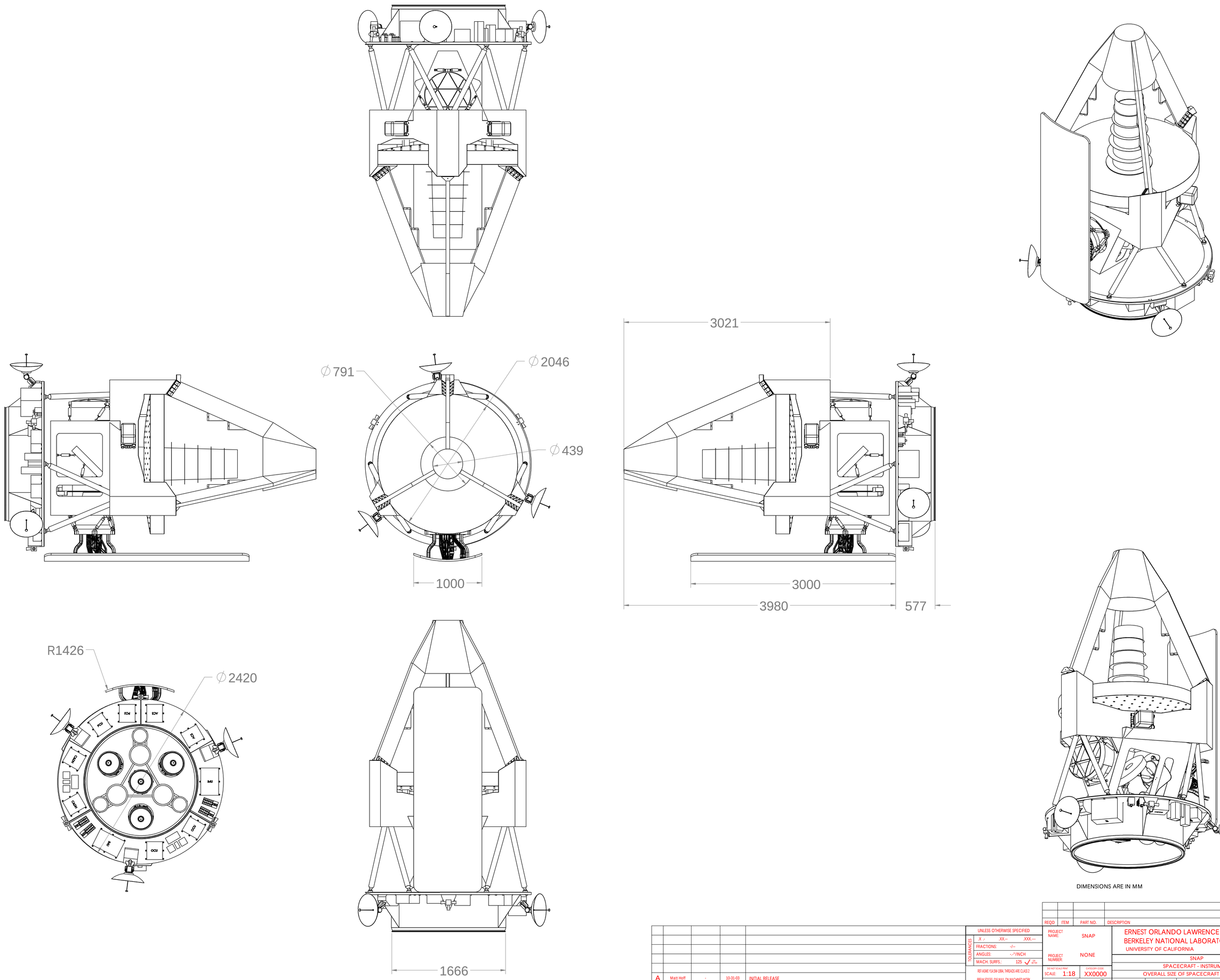

DIMENSIONS ARE IN MM

REV	AUTHOR	APPROVER	DATE	CHANGE DESCRIPTION
A	Matt Hoff	-	10-31-03	INITIAL RELEASE

UNLESS OTHERWISE SPECIFIED
TOLERANCES: .X .- .XX.-- .XXX.---
FRACTIONS: -/--
ANGLES: -.-°/INCH
MACH. SURFS.: 125 ✓ ON METER
REF ASME Y14.5M-1994, THREADS ARE CLASS 2
BREAK EDGES .016 MAX. ON MACHINED WORK
REMOVE BURRS, WELD SPLATTER & LOOSE SCALE

REQD	ITEM	PART NO.	DESCRIPTION

PROJECT NAME: SNAP
PROJECT NUMBER: NONE
DO NOT SCALE PRINT SCALE: 1:18
CATEGORY CODE XX0000
THIRD ANGLE PROJECTION

ERNEST ORLANDO LAWRENCE
BERKELEY NATIONAL LABORATORY
UNIVERSITY OF CALIFORNIA

SNAP
SPACECRAFT - INSTRUMENT
OVERALL SIZE OF SPACECRAFT - INSTUMENT

1 SHEET OF 1 SIZE: E DWG NO: 25BXXX REV A