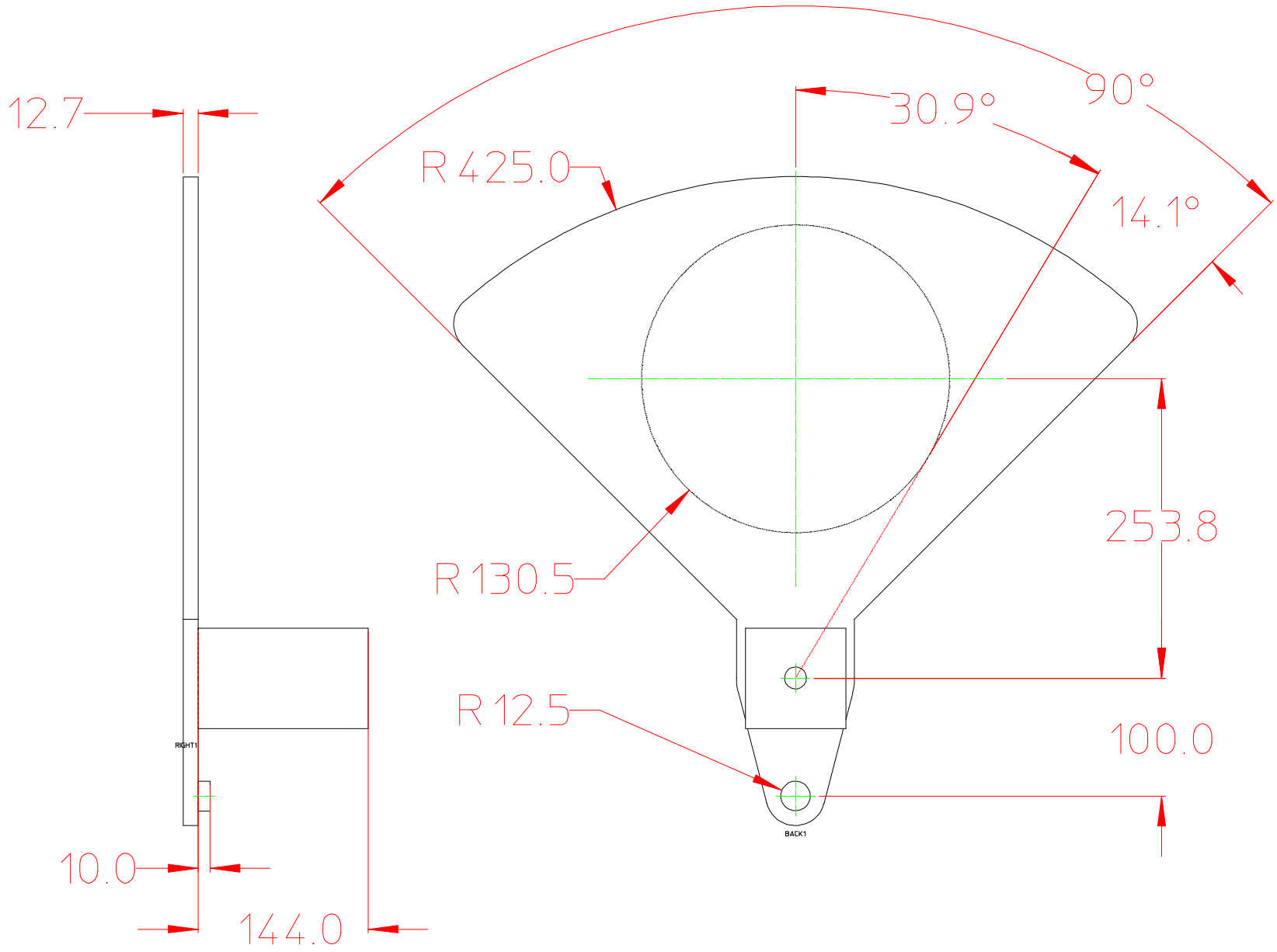
12.7
90°
30.9°
R 425.0
14.1°
253.8
R 130.5
R 12.5
100.0
RIGHT1
BACK1
10.0
144.0