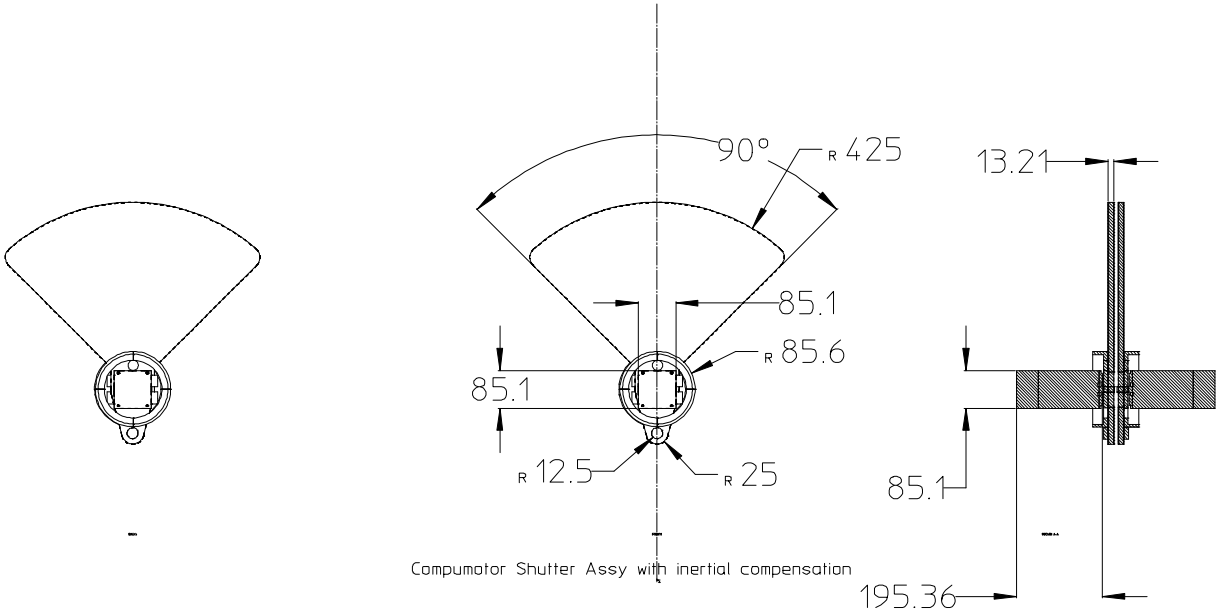
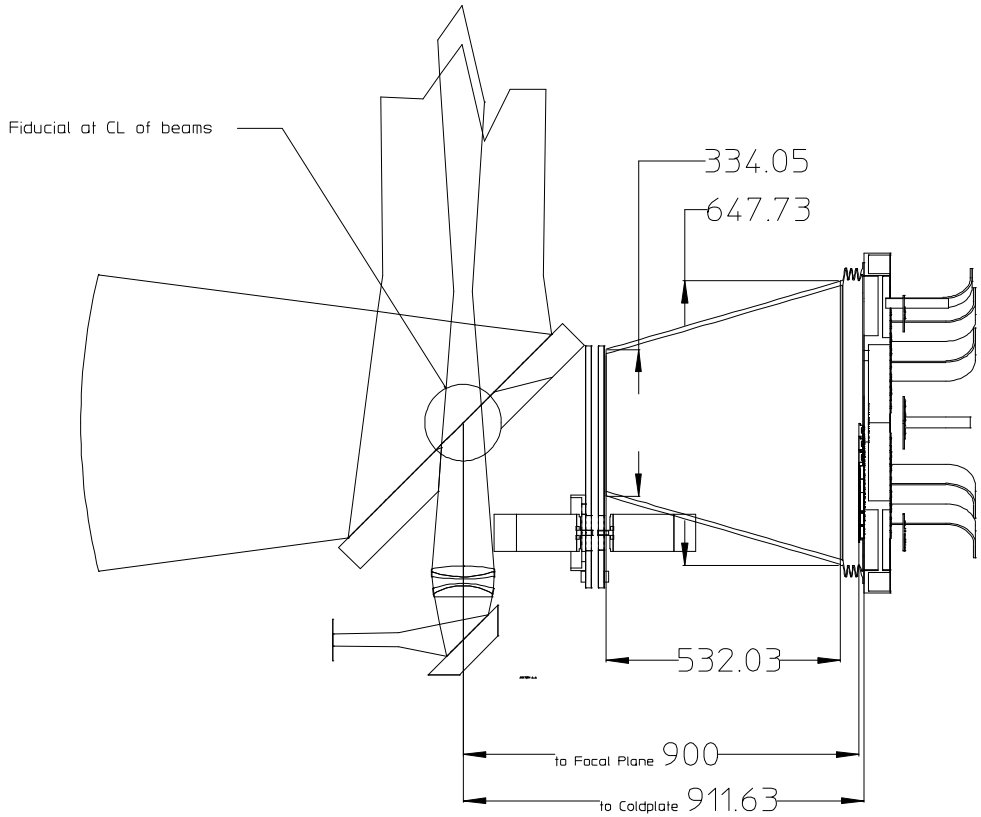
Compumotor Shutter Assy with inertial compensation