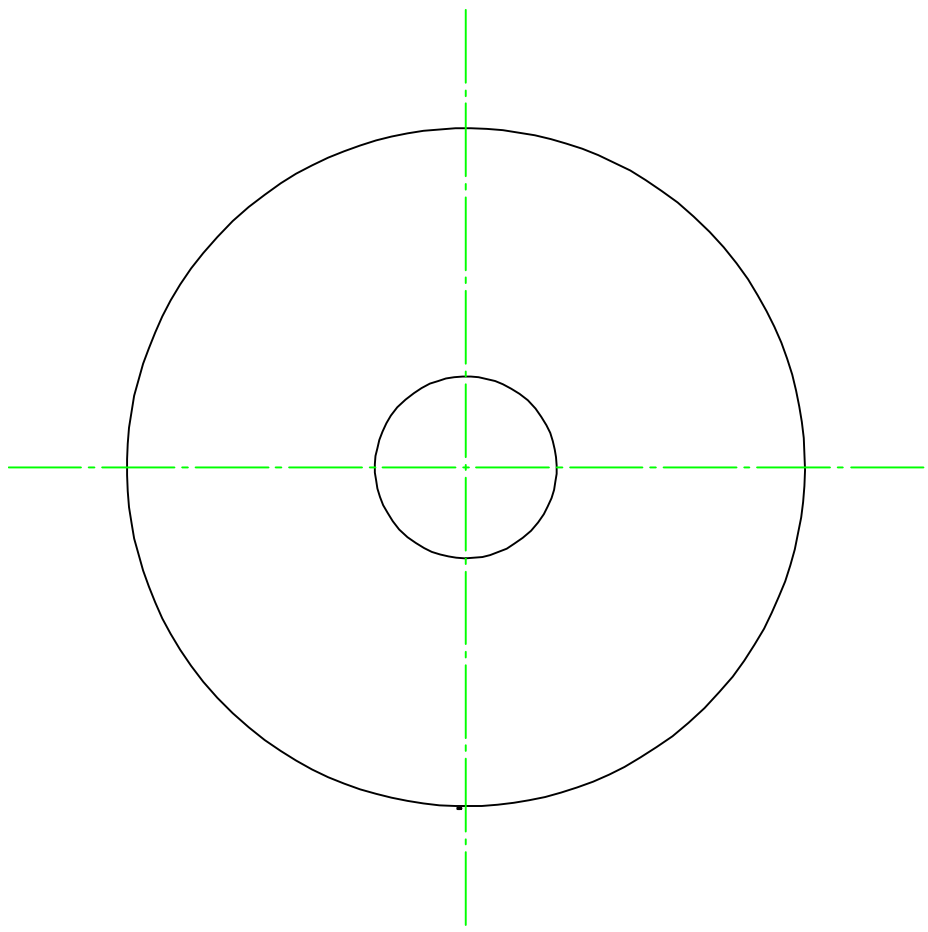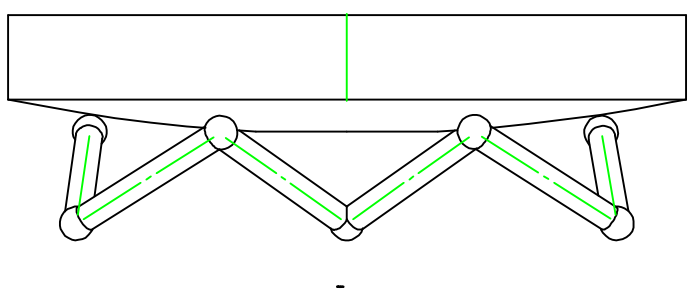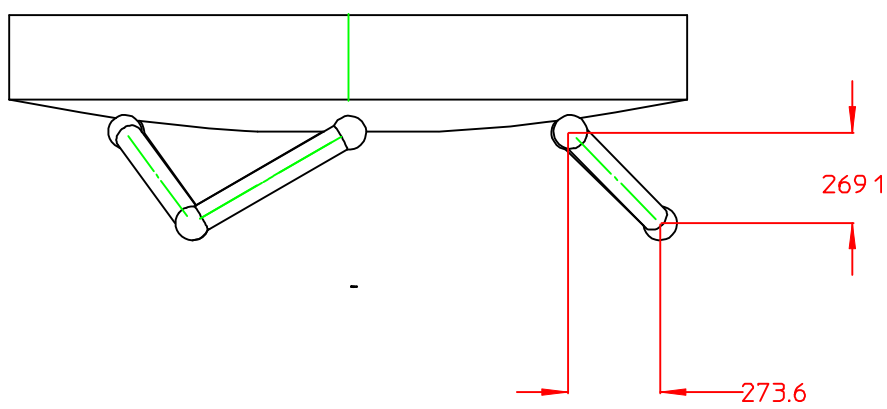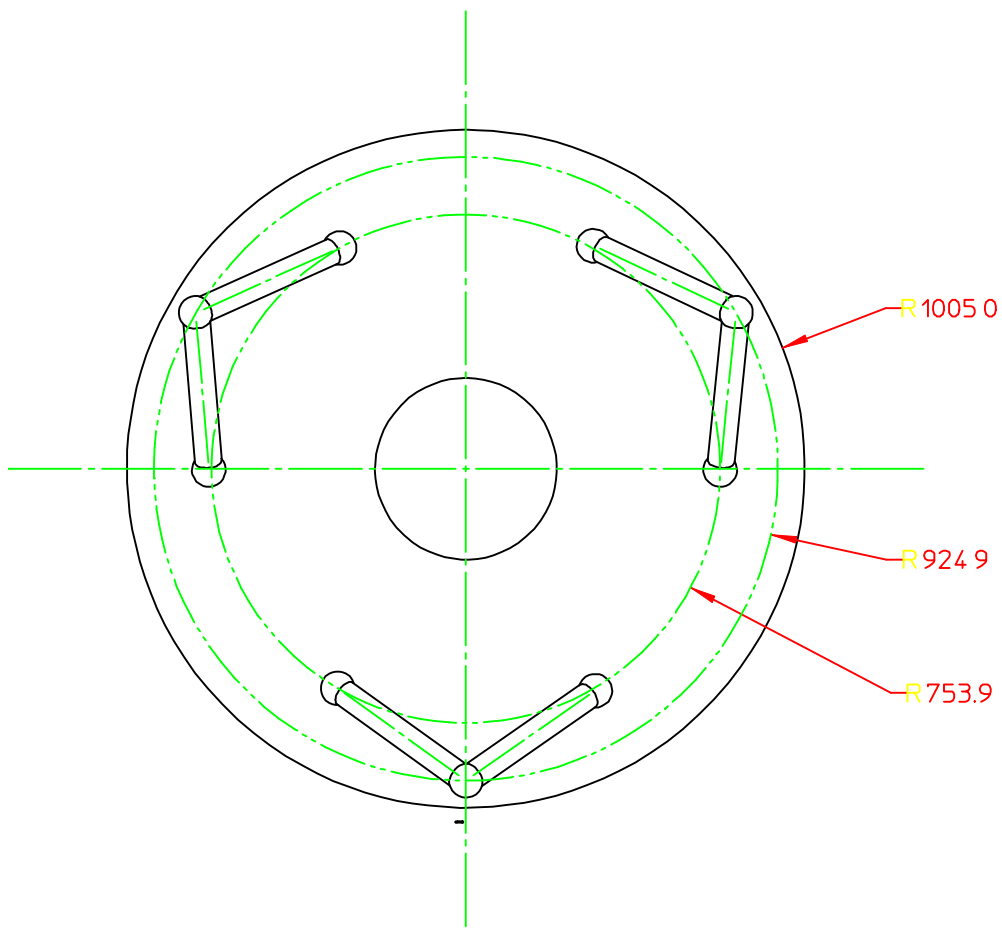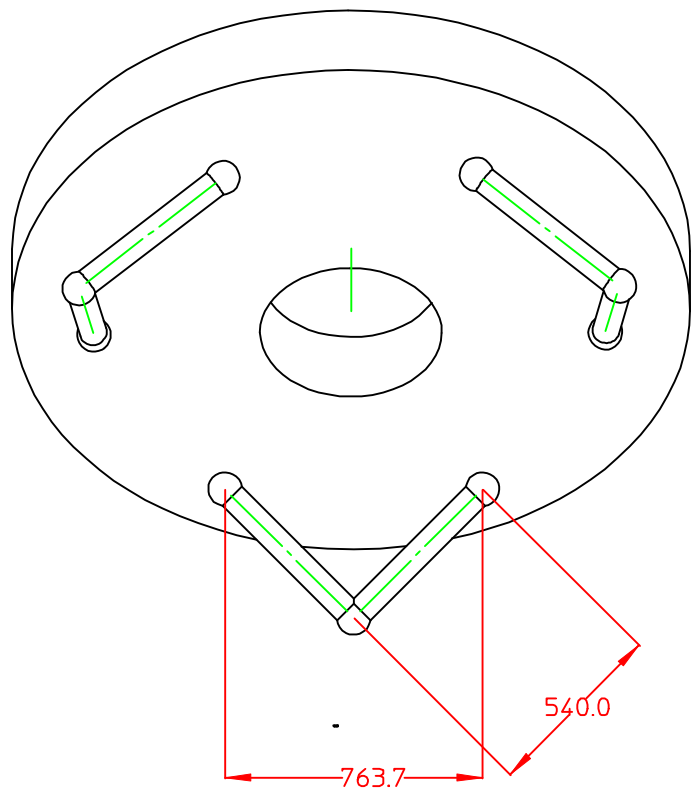File: x13AA-Primary.mi
Date: 18-Apr-2002 13:25:01
Author: lafever
Dir: //me56/lafever/mosaic/SNAP/Snap_13