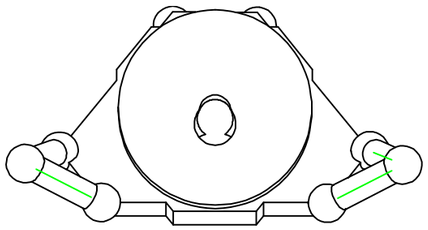

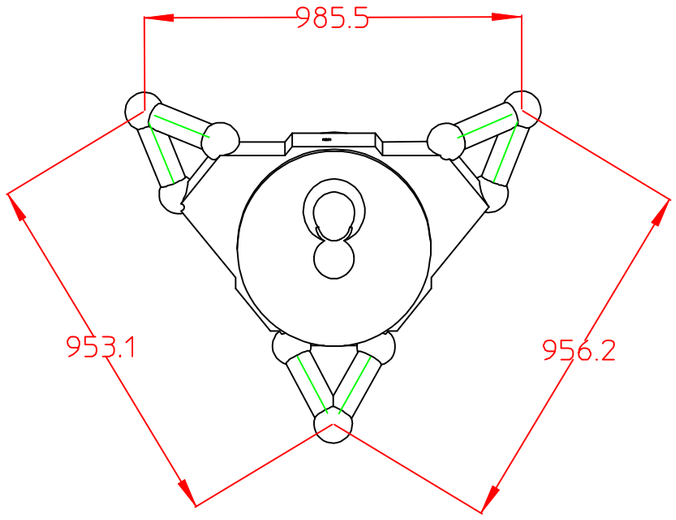

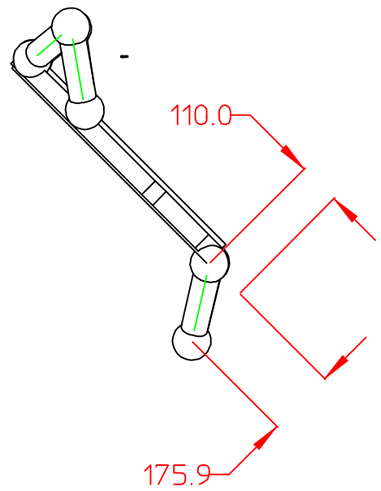

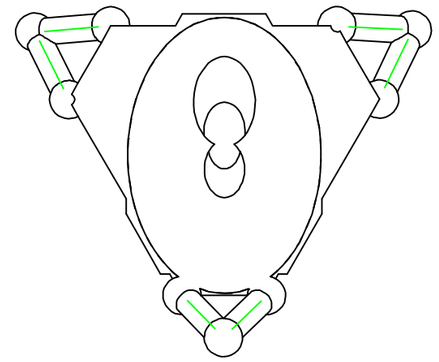

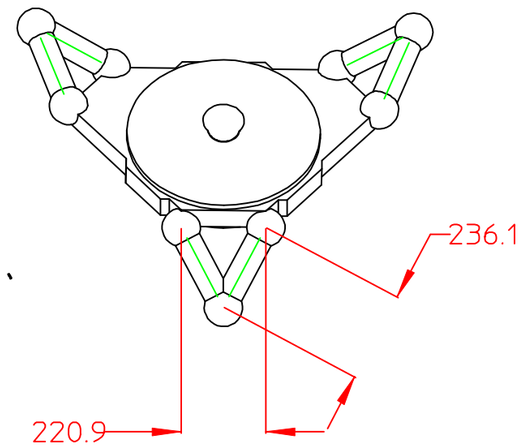

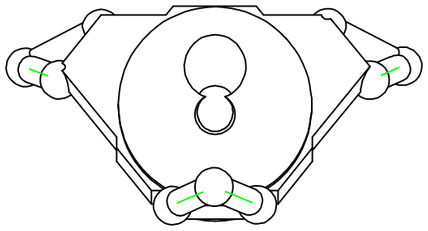

File: x13AA-Fold-Flat.mi
Date: 18-Apr-2002 13:35:02
Author: lafever
Dir: //me56/lafever/mosaic/SNAP/Snap_13