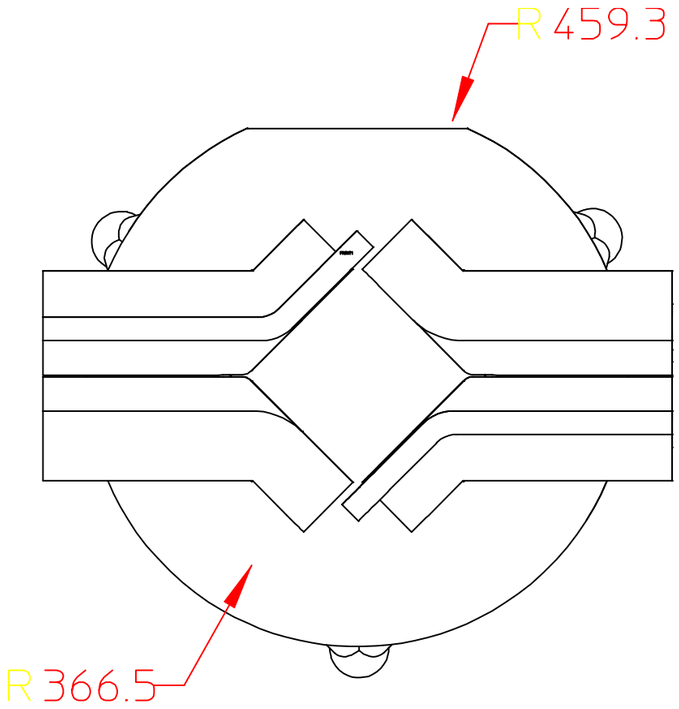

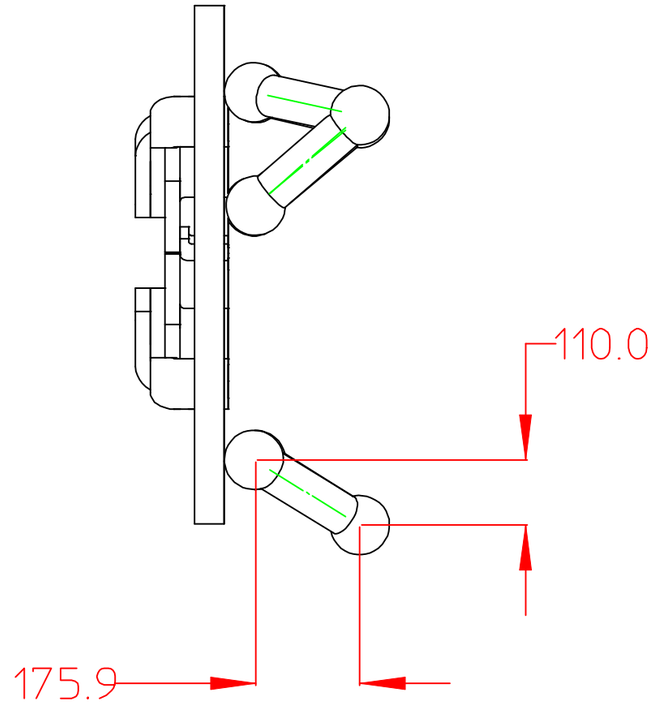

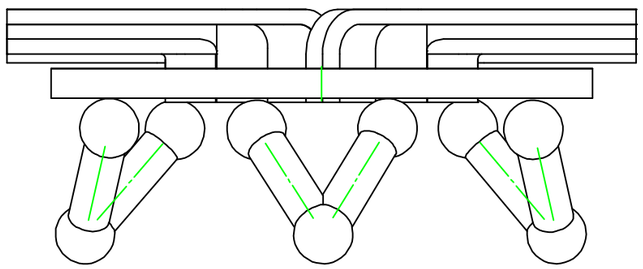

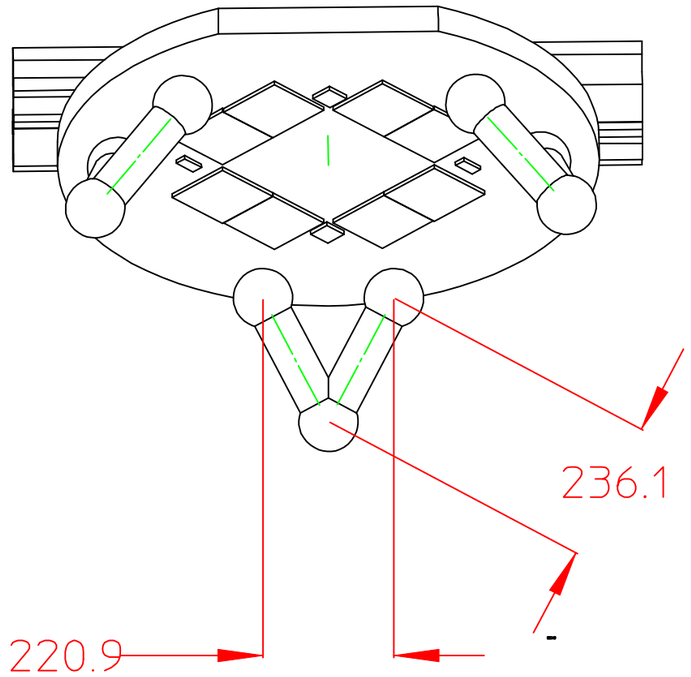

File: x13AA-Fido mi
Date: 18-Apr-2002 13:05:56
Author: lafever
Dir: //me56/lafever/mosaic/SNAP/Snap_13