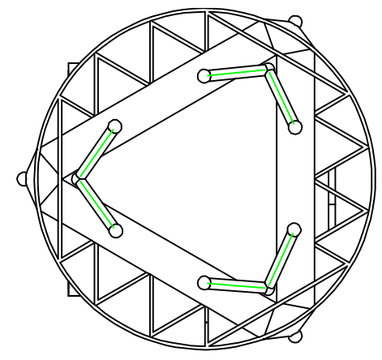

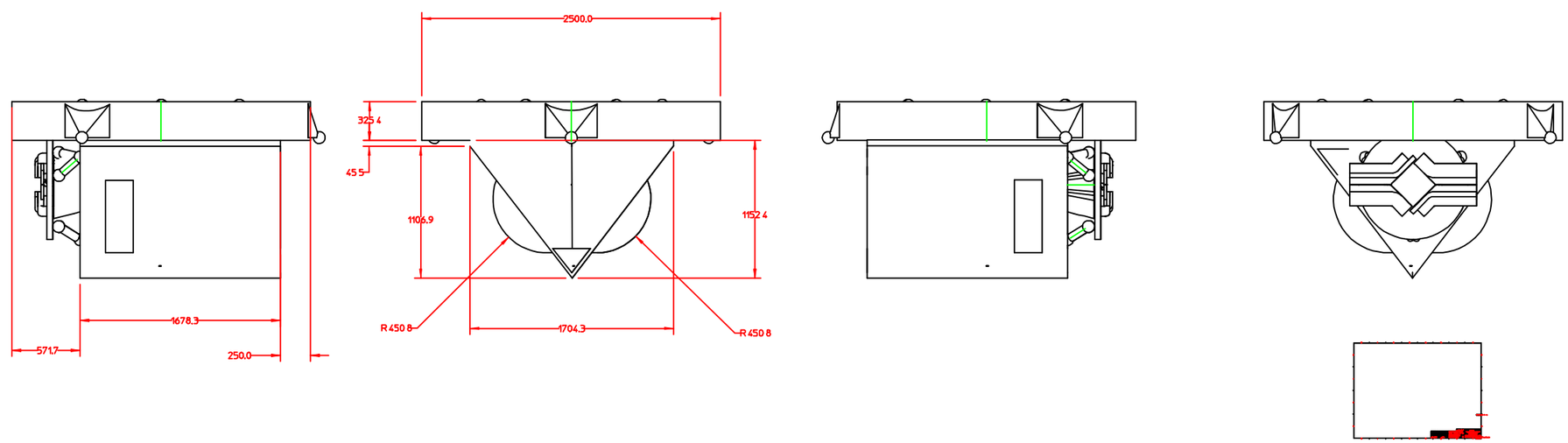

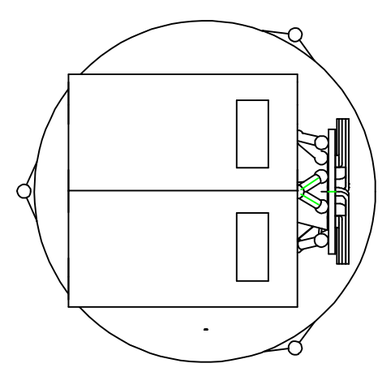

File: GSE-Package-X13AA-02.mi
Date: 17-Apr-2002 20:06:25
Author: lafever
Dir: //me56/lafever/mosaic/SNAP/Snap_13