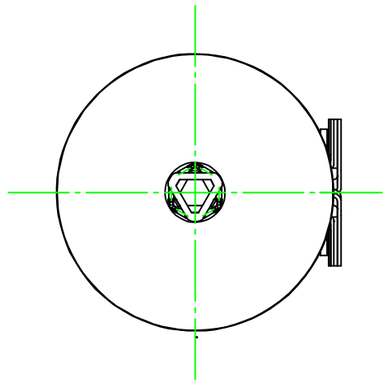

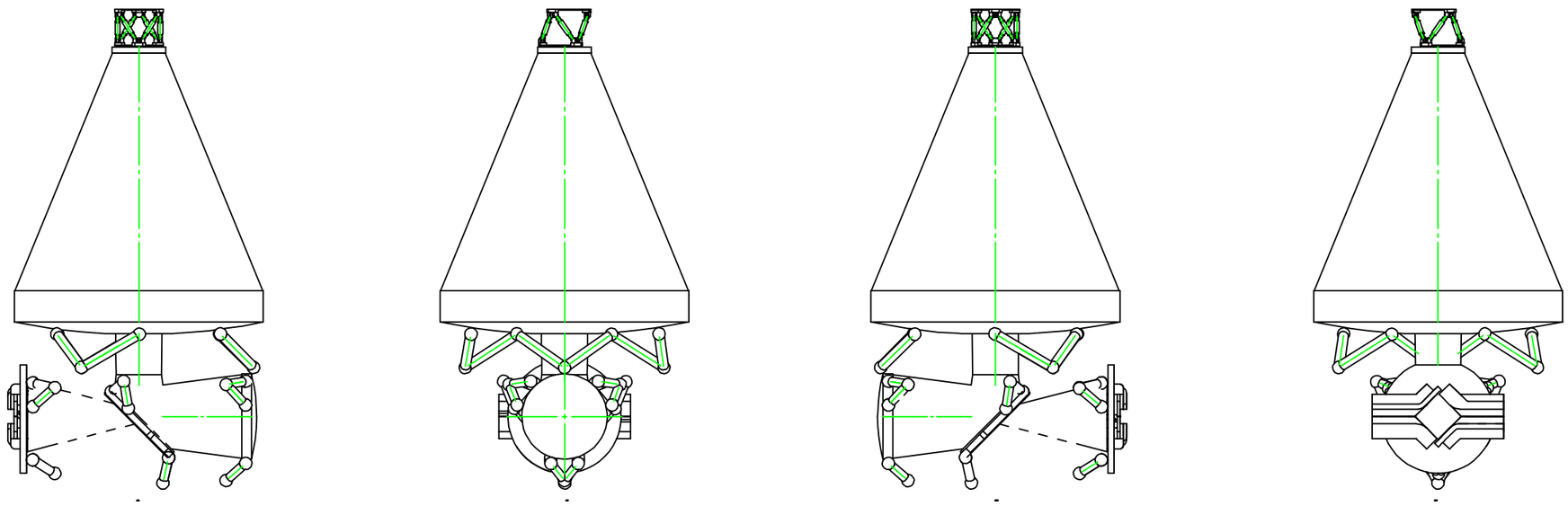

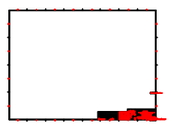
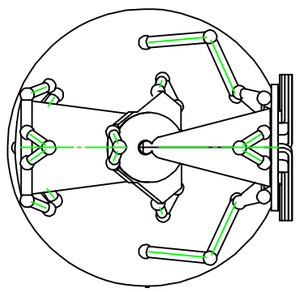
File: GSE-Package-X13AA-01.mi
Date: 17-Apr-2002 19:56:48
Author: lafever
Dir: //me56/lafever/mosaic/SNAP/Snap_13