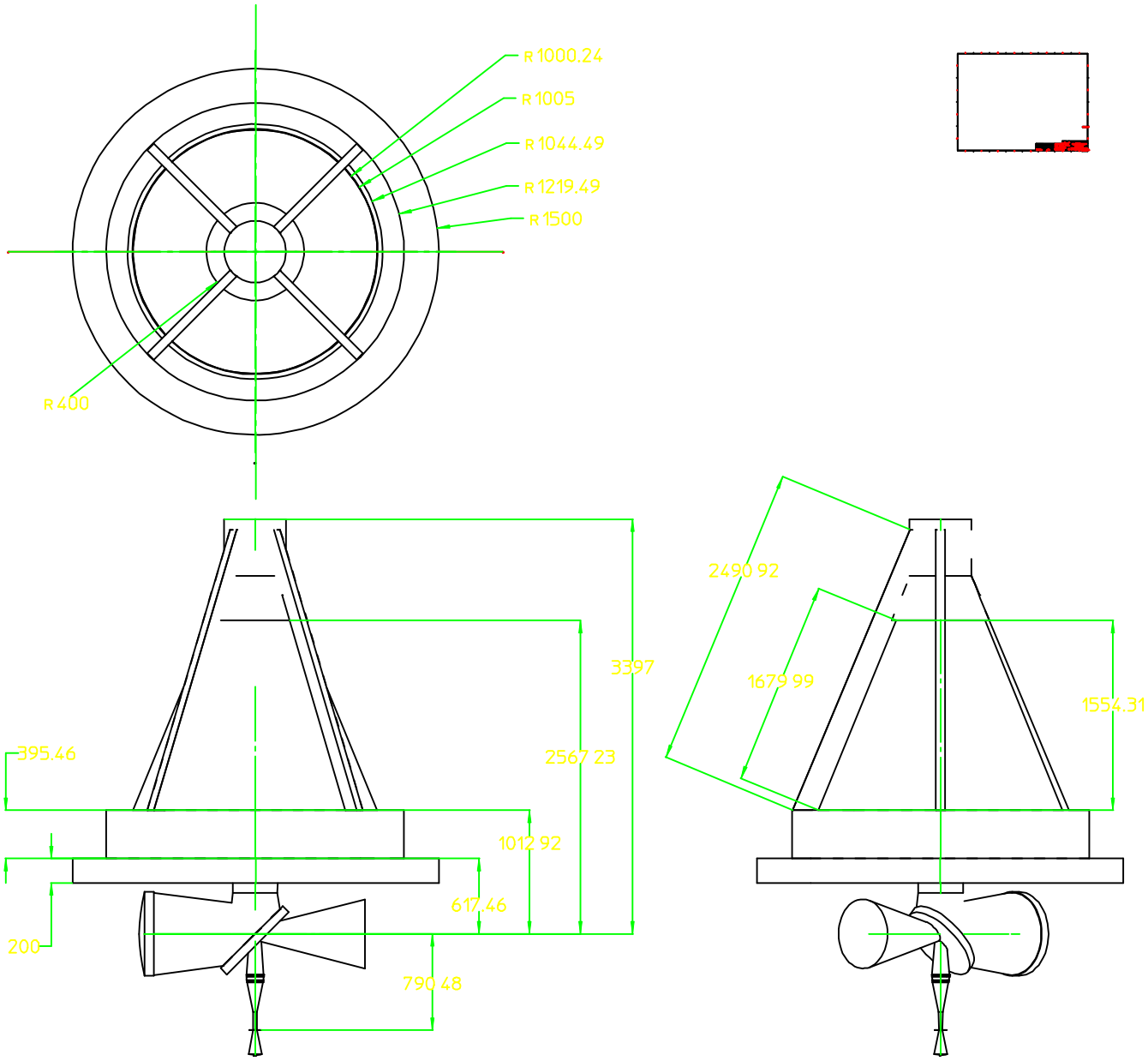
R 1000.24
R 1005
R 1044.49
R 1219.49
R 1500
R 400
3397
2567.23
395.46
1012.92
617.46
200
790.48
2490.92
1679.99
1554.31