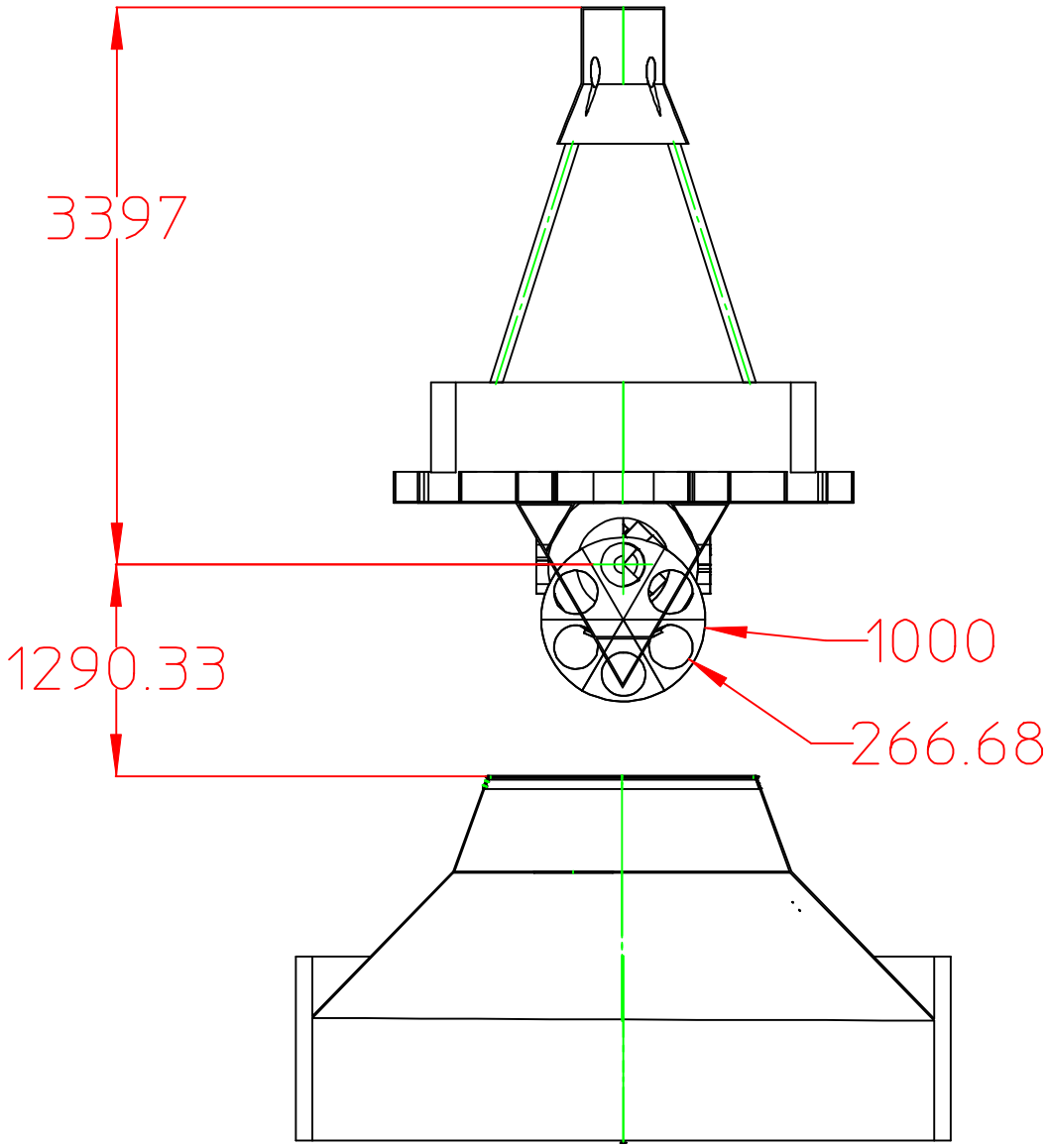
3397
1290.33
1000
266.68