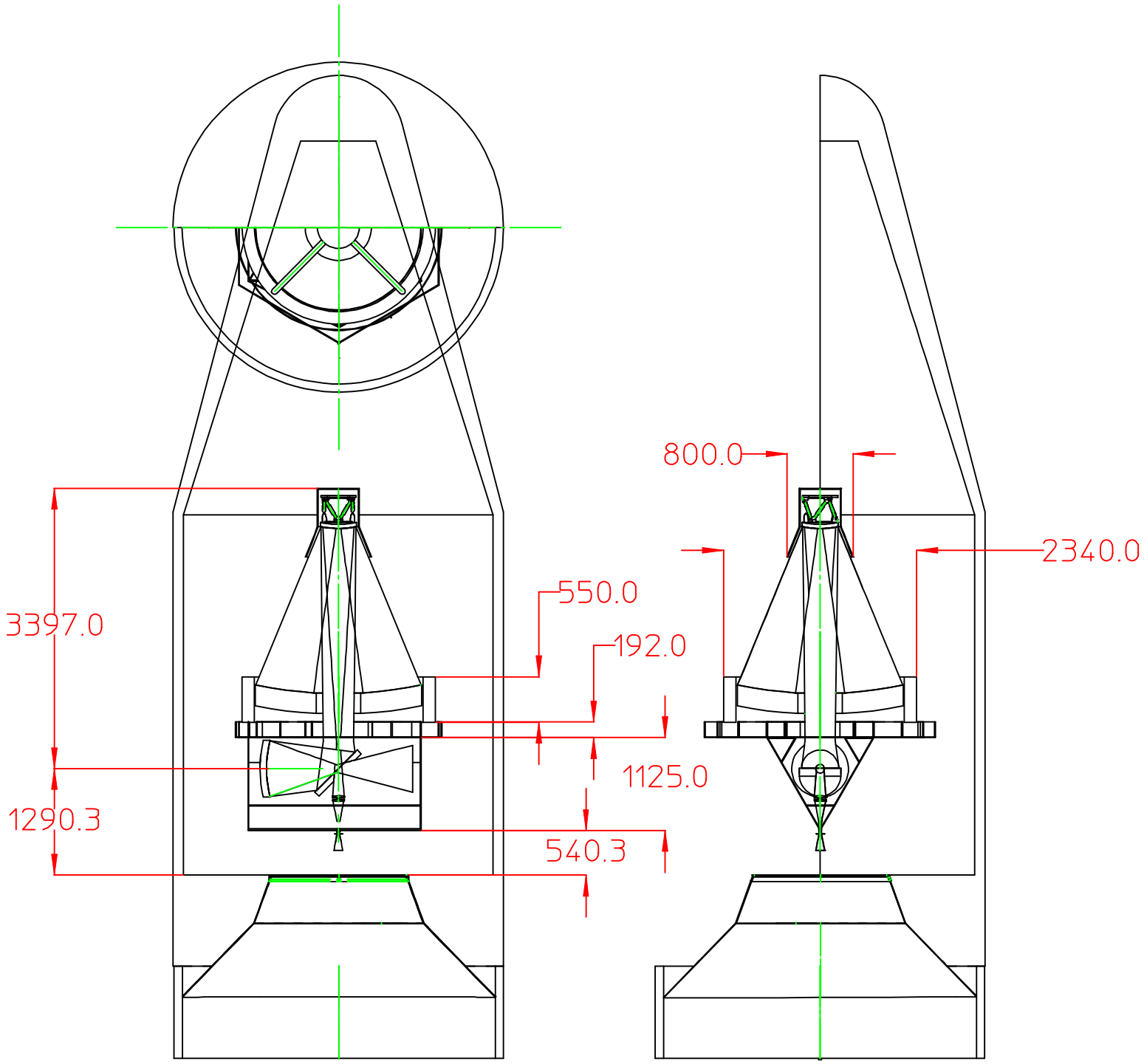
800.0
2340.0
550.0
192.0
3397.0
1125.0
1290.3
540.3