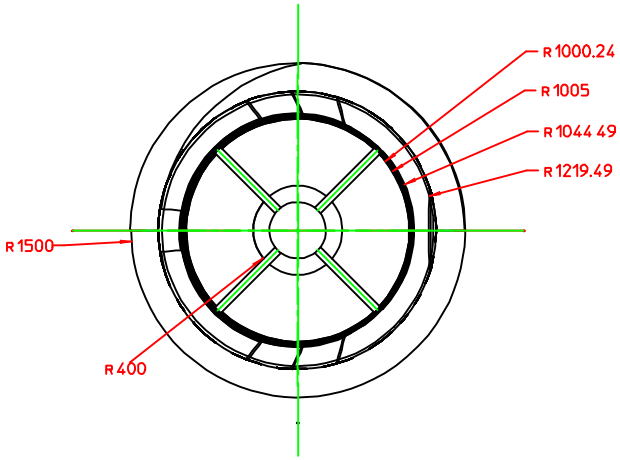
R 1000.24
R 1005
R 1044 49
R 1219.49
R 1500
R 400

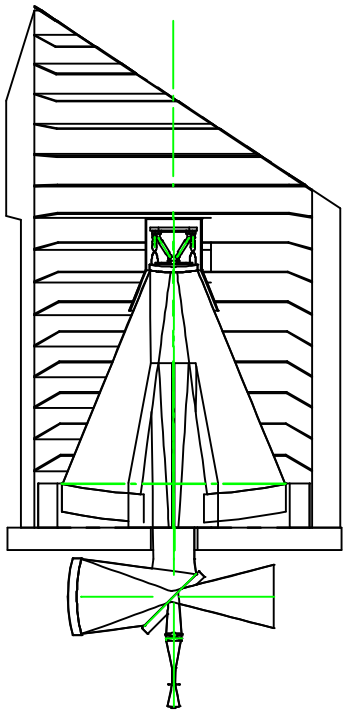

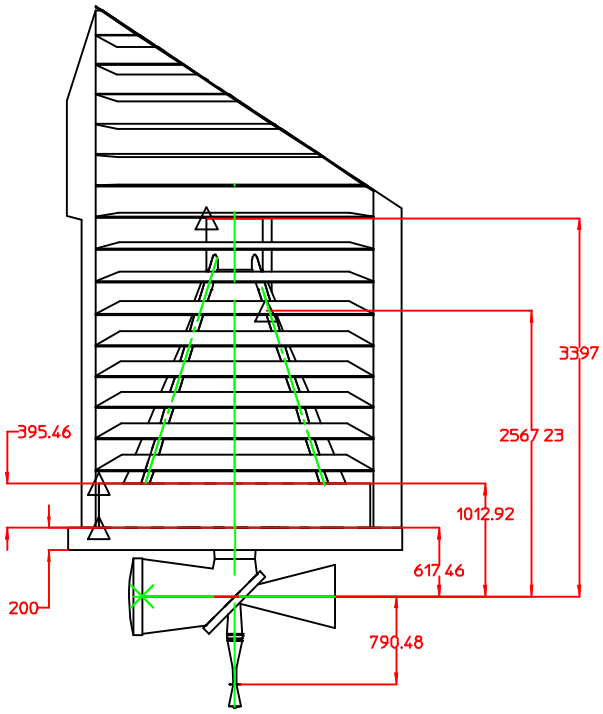
3397
395.46
2567 23
1012.92
617.46
200
790.48

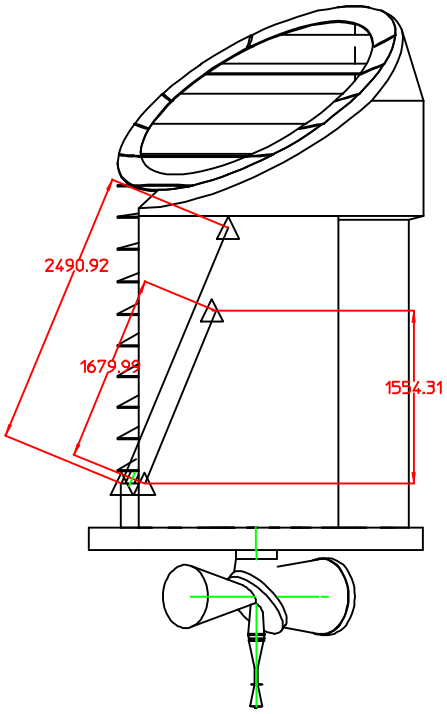
2490.92
1679.98
1554.31