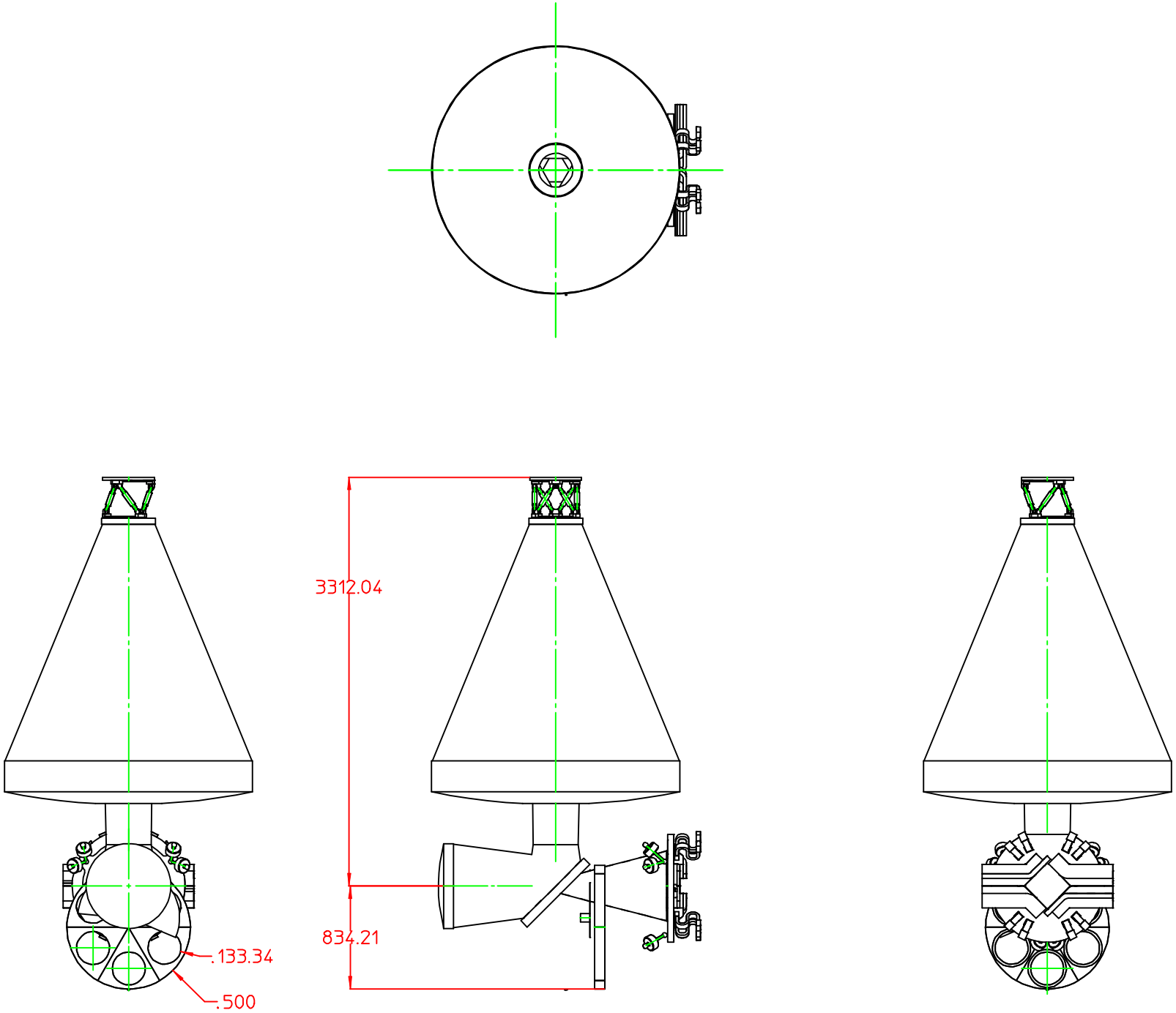
3312.04
834.21
.133.34
.500