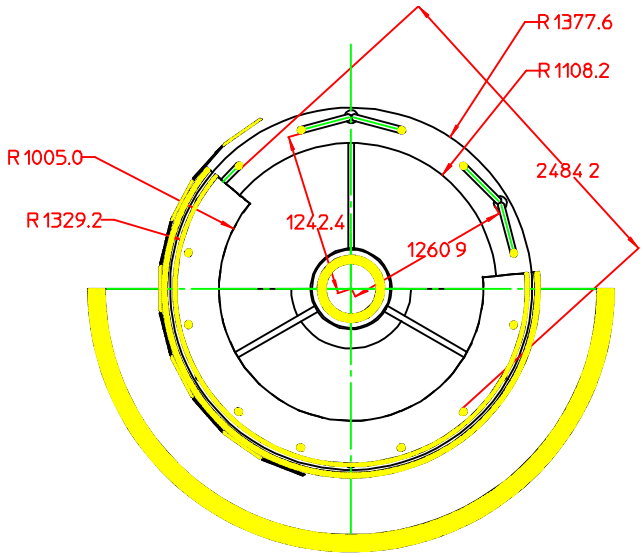
R 1377.6
R 1108.2
R 1005.0
2484 2
R 1329.2
1242.4
1260 9

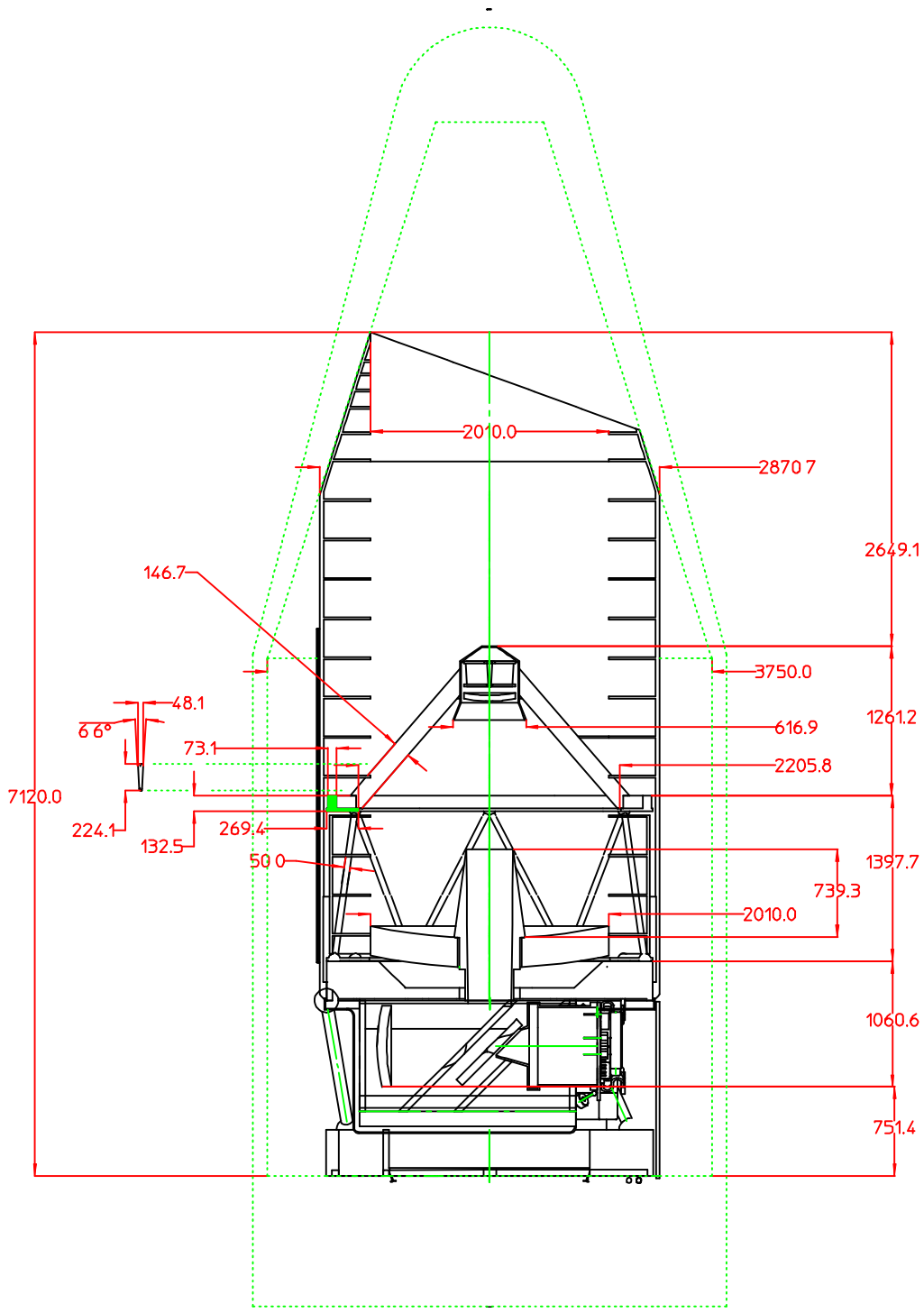
2010.0
2870 7
2649.1
146.7
3750.0
48.1
6 6°
616.9
1261.2
73.1
2205.8
7120.0
224.1
269.4
132.5
50 0
1397.7
739.3
2010.0
1060.6
751.4