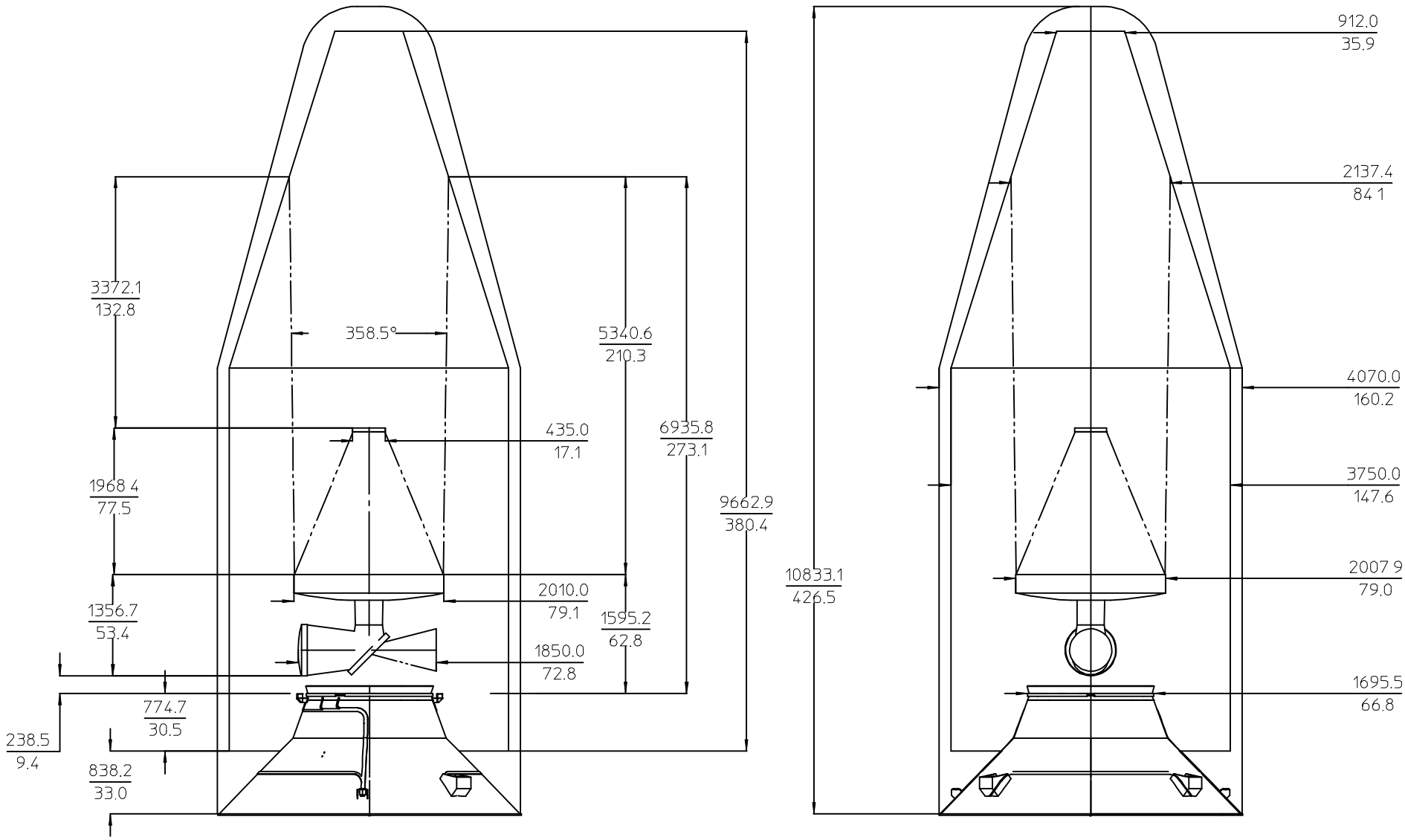
3372.1
132.8
358.5°
5340.6
210.3
435.0
17.1
6935.8
273.1
1968.4
77.5
9662.9
380.4
2010.0
79.1
1356.7
53.4
1595.2
62.8
1850.0
72.8
774.7
30.5
238.5
9.4
838.2
33.0
912.0
35.9
2137.4
84.1
4070.0
160.2
3750.0
147.6
10833.1
426.5
2007.9
79.0
1695.5
66.8