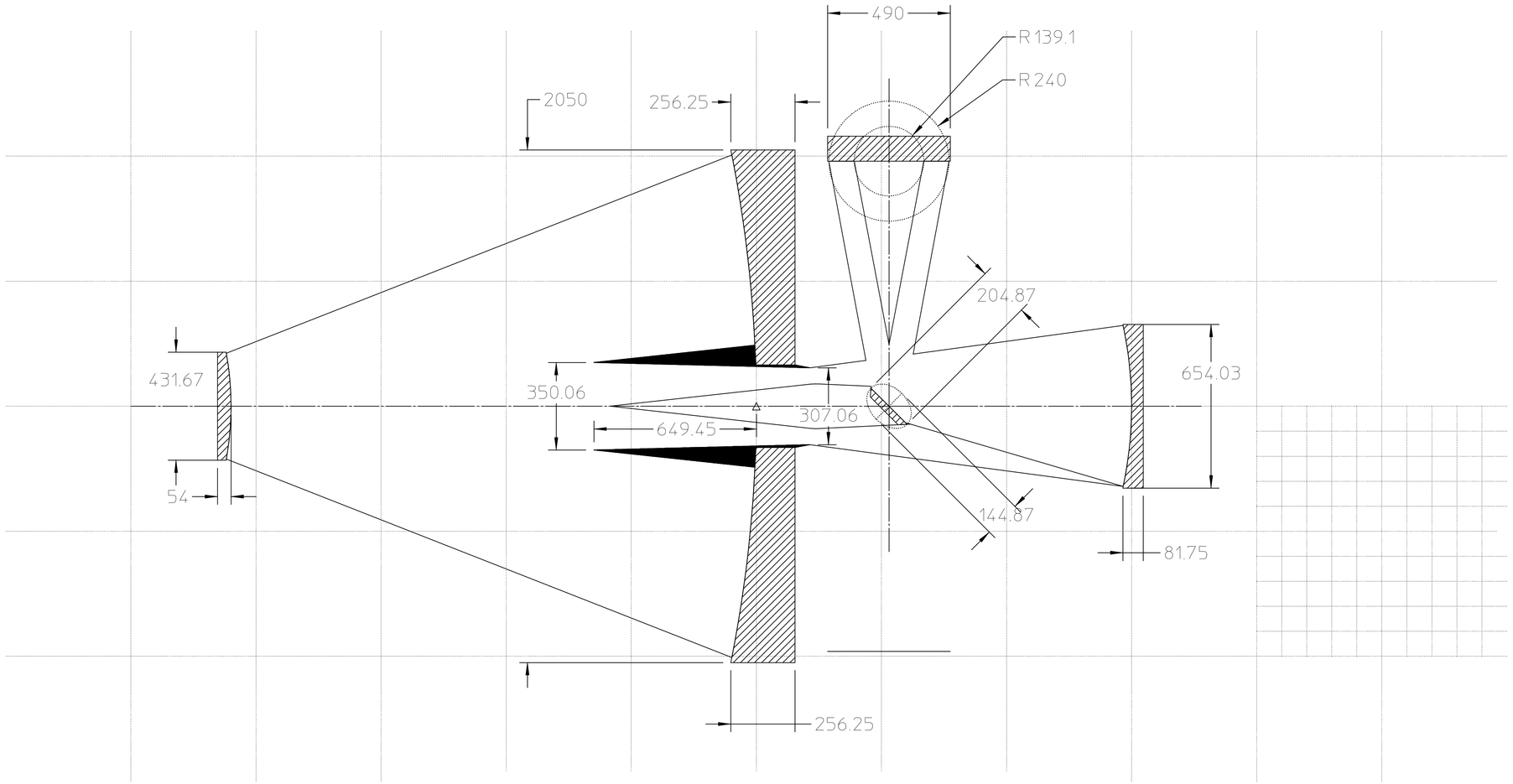

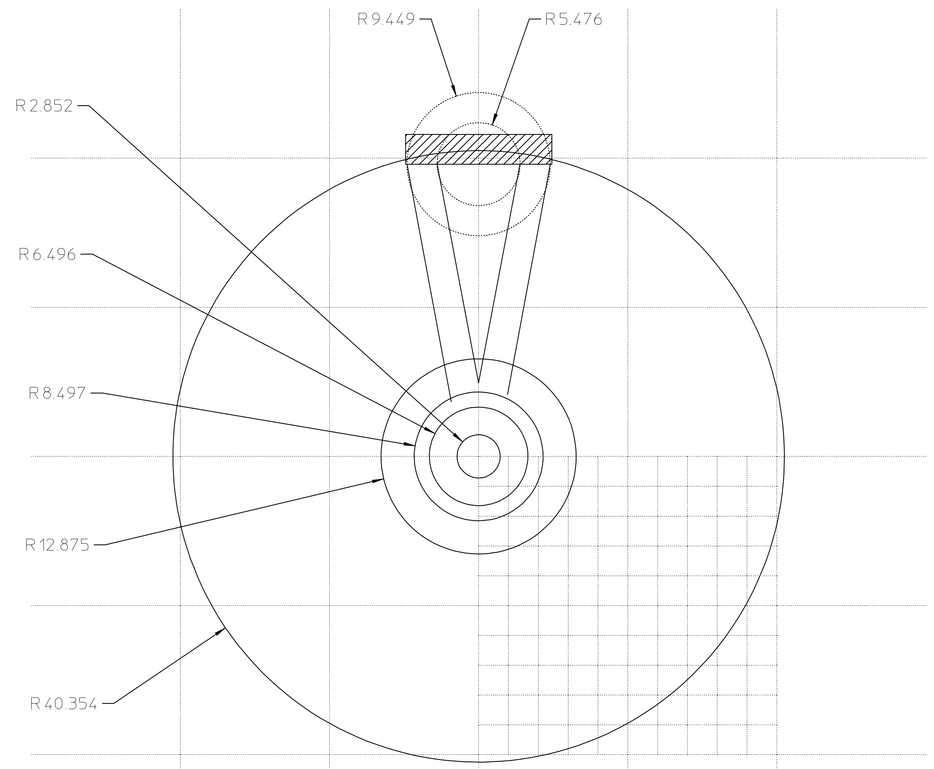

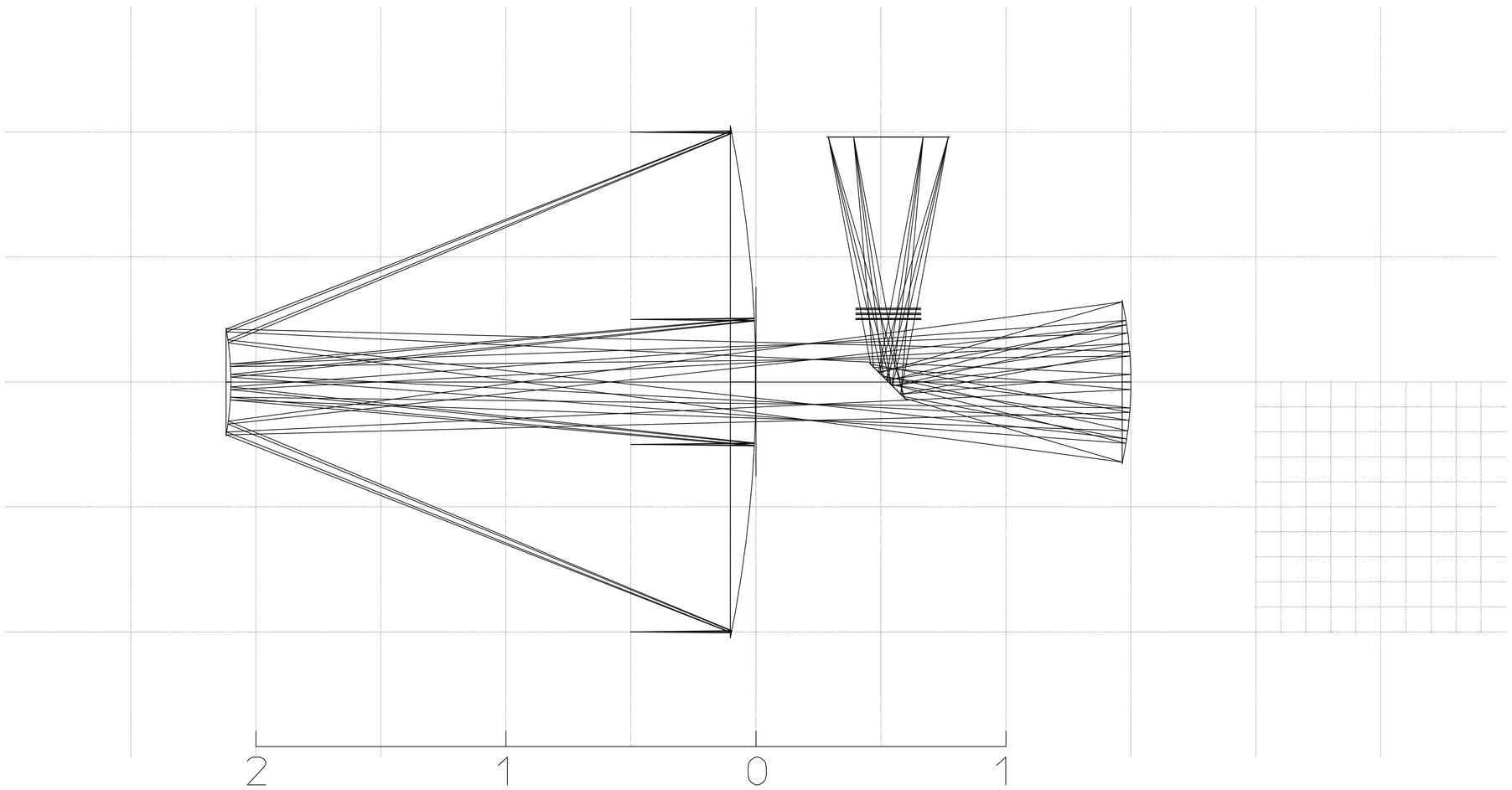

Rays
Layout
Grid

TMA–55 Optics

File: TMA-55_Optics.mi
Date: 28-Jul- 100 14:13:42
Author: lafever
Dir: //me56/lafever/mosaic/SNAP/TMA