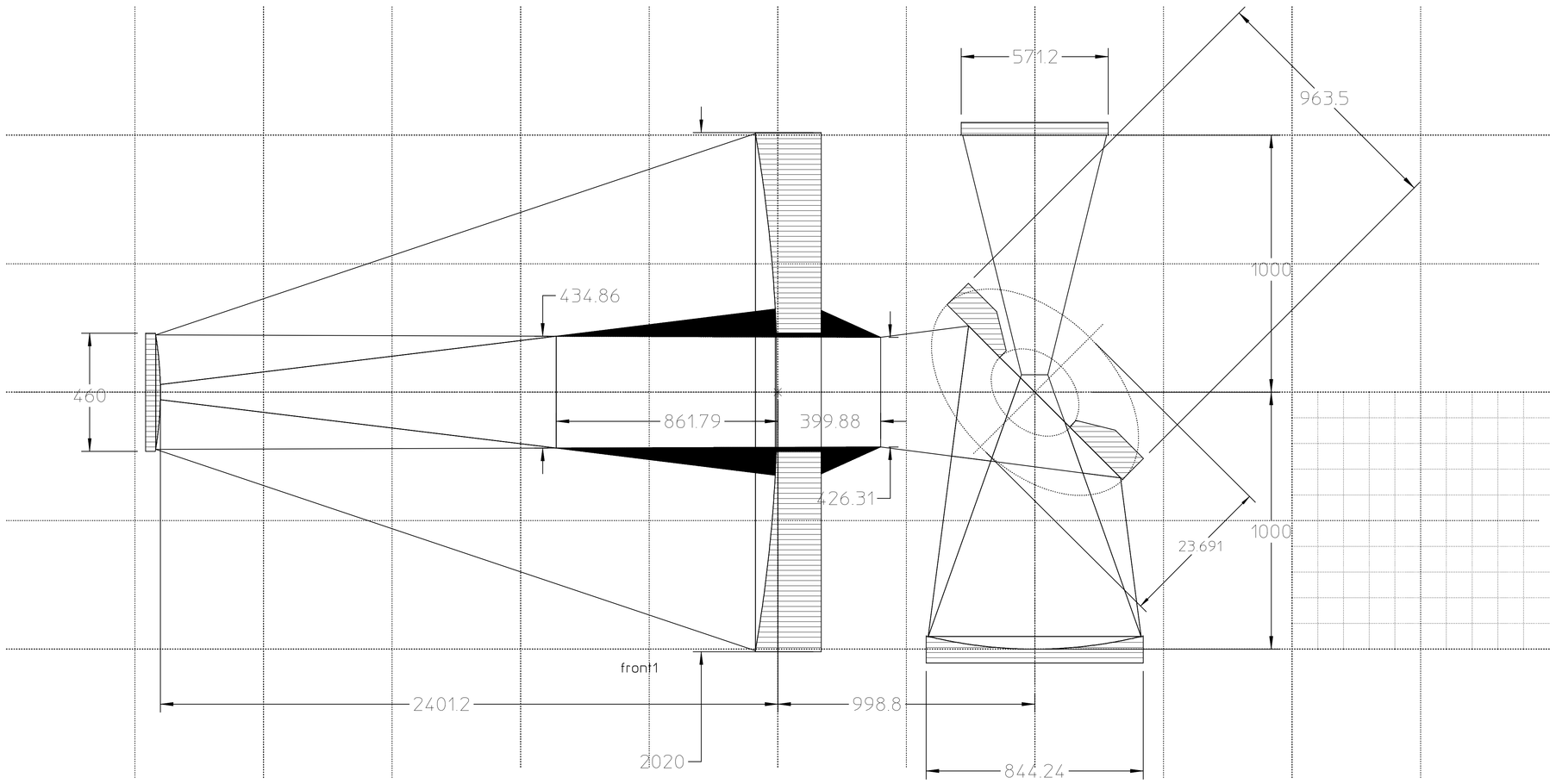

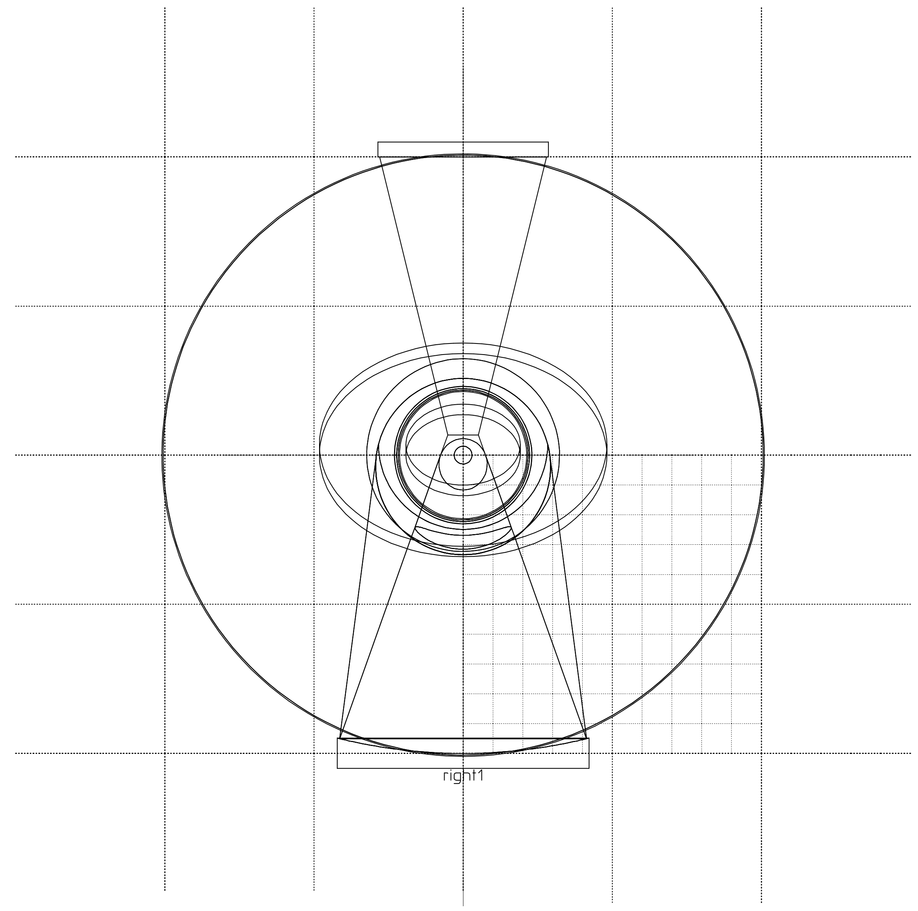

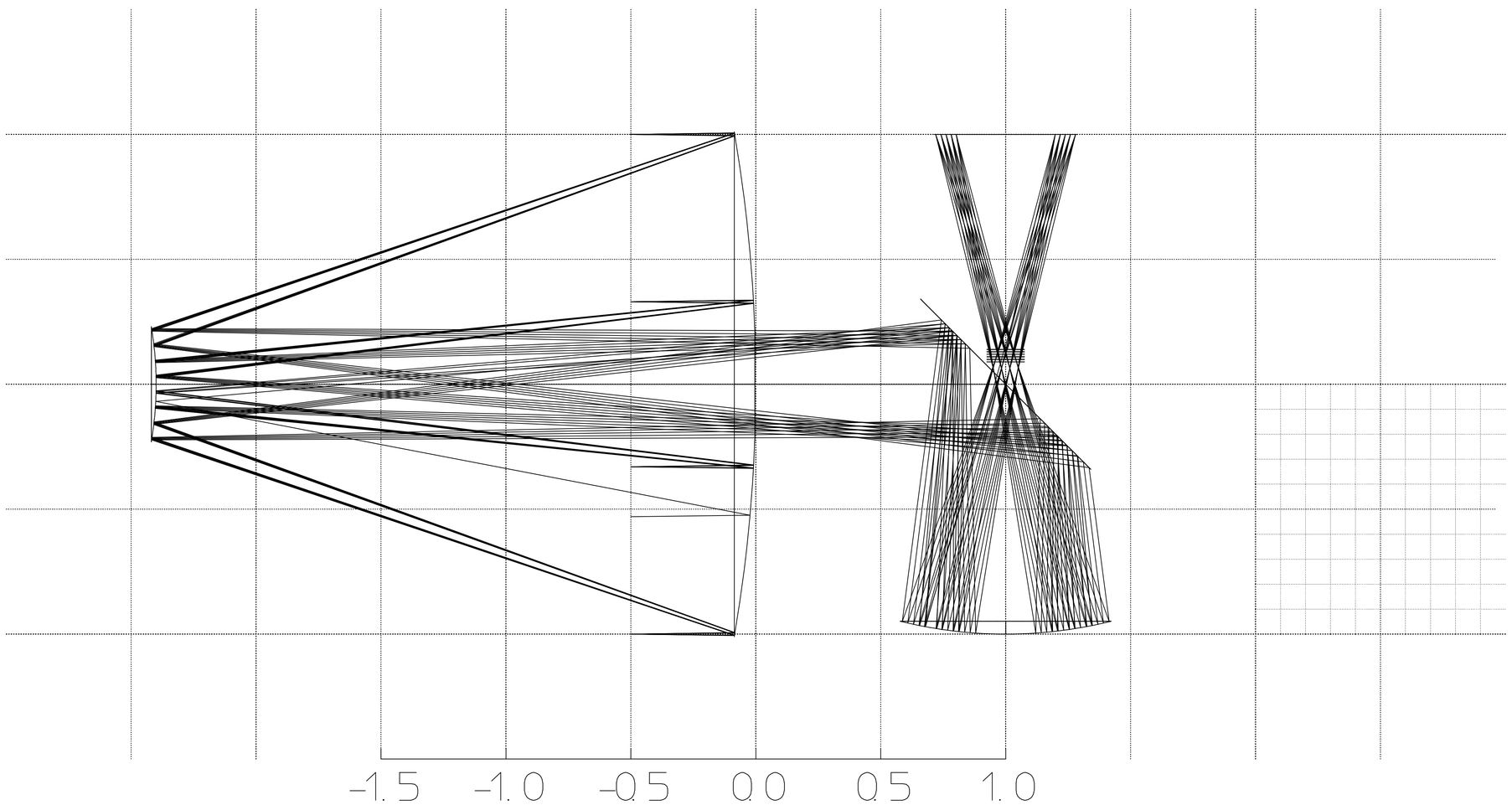

Grid

TMA-51 Optics

First pass mechanical layout

17 July 2000

File: TMA-51_Optics.dxf
File: TMA-51_Optics.mi
Date: 12-Jul- 100 17:55:05
Author: lafever
Dir: //me56/lafever/mosaic/SNAP/Snap_4