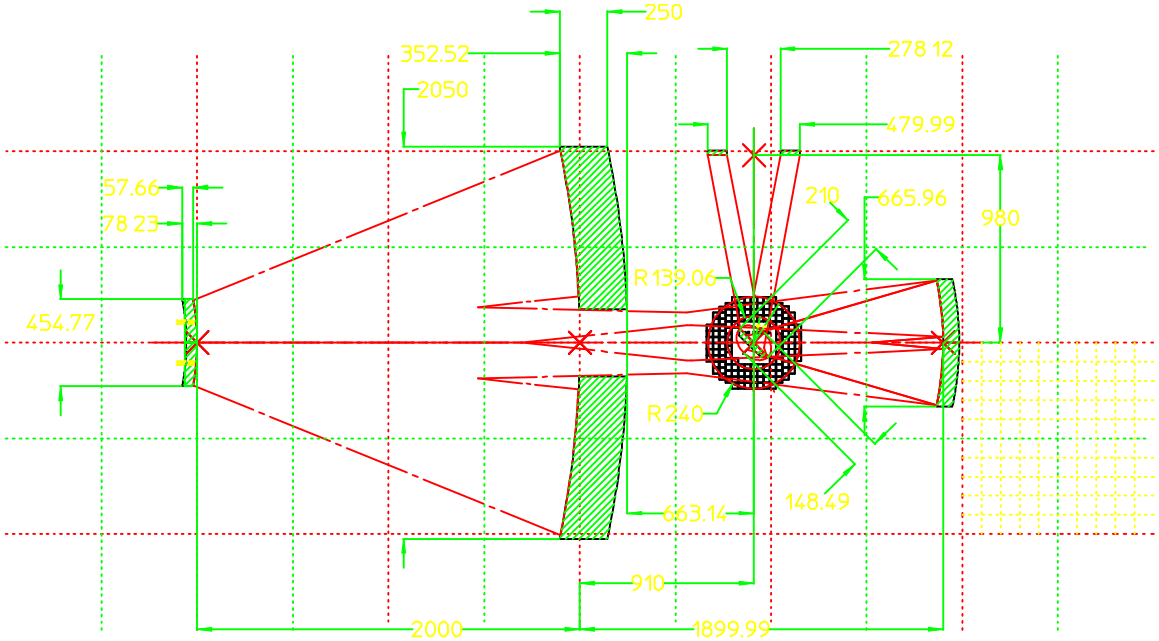

TMA-56_BeamEnvelope
TMA-56_BeamProfiles

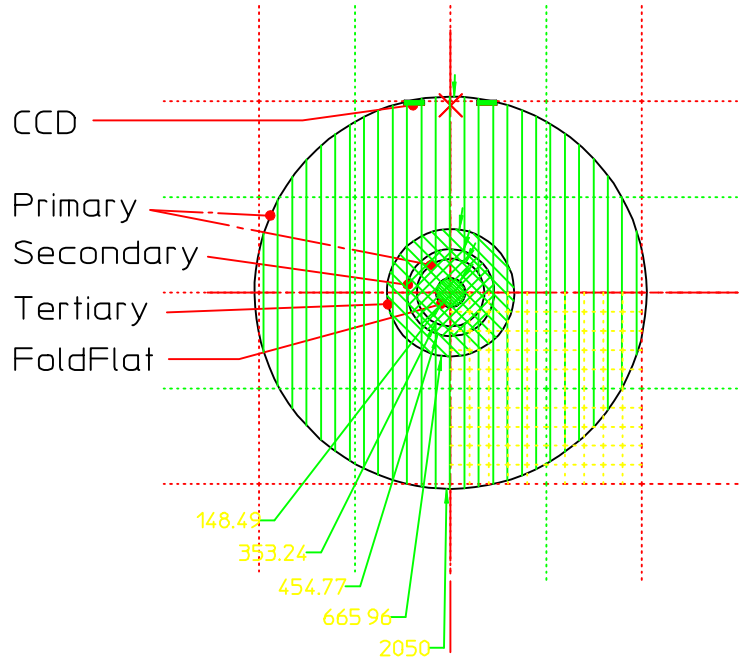

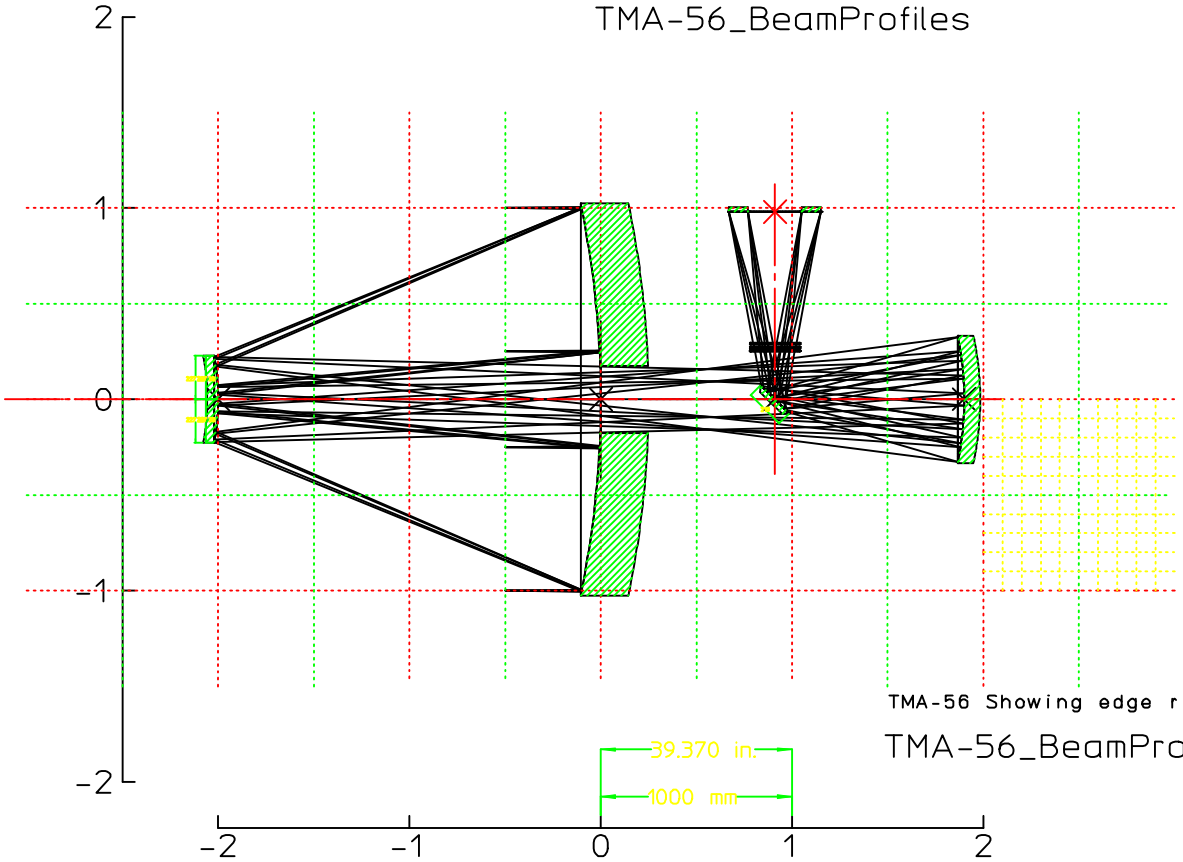

TMA-56 Showing edge rays

TMA-56_BeamProfiles

PARTS STRUCTURE

TMA-56_Optica.mi
TMA-56_BeamEnvelope
TMA-56_BeamProfiles
Primary
Secondary
Tertiary
FoldFlat
CCD

File: TMA-56_Optica.mi
Date: 28-Aug- 100 19:06:49
Author: lafever
Dir: //me56/lafever/mosaic/SNAP/TS-Tma

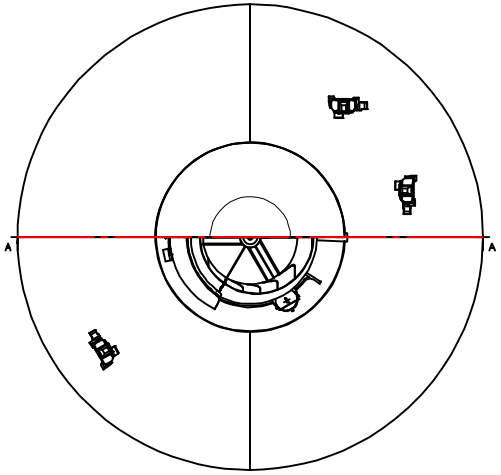

top1
Scale 1:40

Pos	Part No.	Part Name

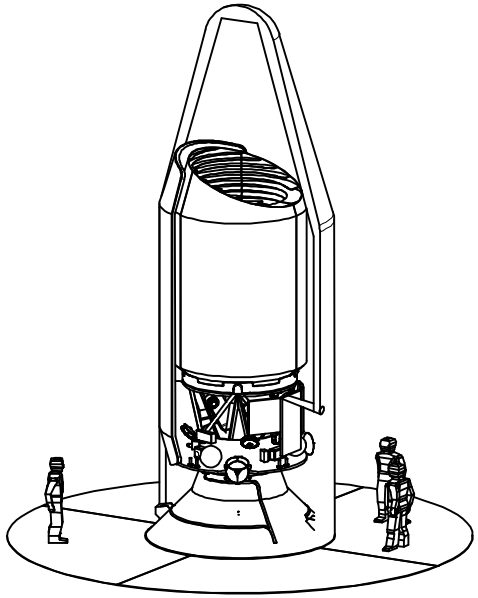

gen1
Scale 1:40

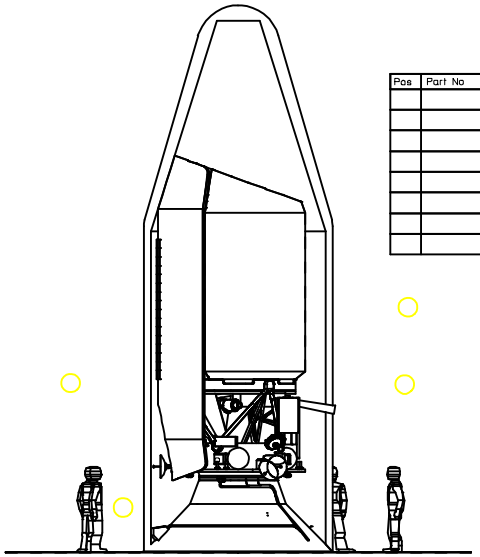

front1
Scale 1:40

Pos	Part No	Part Name

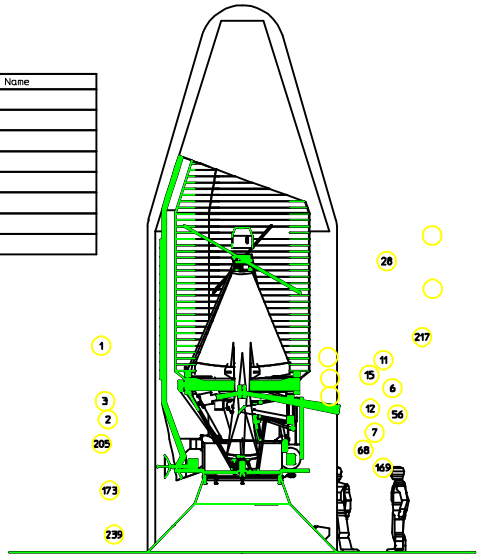

Section A-A
Scale 1:40

00X0006A

REQD	ITEM	PART NO	DESCRIPTION
-	-	-	-

REV	DWG	CHK	ZONE	DATE	CHANGES
-	-	-	-	-	-

SHEET 1 OF 1

UNLESS OTHERWISE SPECIFIED
DIMENSIONS: .X ± - FRACT ± - ANGLES ±- .XX ± - FINISH - .XXX ± -
THREADS ARE CLASS 2
TOLERANCE BASIS OF ALL DIMENSIONS AFTER PLATING, PAINTING AND CLEANING WITHIN SAME DIMENSIONAL LIMITS AS BEFORE SUCH TREATMENT.
GENERAL MACHINE JOB ORDER, NO DEDICATED WORK INSTRUCTIONS, WORK WITH SHOP FOREMAN & MACHINE SCHEDULE.
DEBURR ALL EDGES & REMOVE SCALE
SHOP ORDERS
ASSY NO.
SERIAL NO.
MATL SPEC
MATL FORM
SCALE 1:1
QTY
DIST. CODE
MATL TREAT
SURFACE TREATMENT -
LEGEND
CLEAN -
DATE -
DWN -
DATE -
CHK -
DATE -
APP -
DATE -

LAWRENCE BERKELEY LABORATORY
UNIVERSITY OF CALIFORNIA-BERKELEY
FIRST LINE OF TITLE
SECOND LINE OF TITLE
THIRD LINE OF TITLE

PATENT CLEAR	DWG TYPE	SHEET NO	SCALE
-	-	-	1:1
INTERCHP/FLUID	MASTER ASSY. NO	CONTROL CODE	DWG. NO.
-		-	00X0006A

DO NOT SCALE DRAWING
SIZE REV