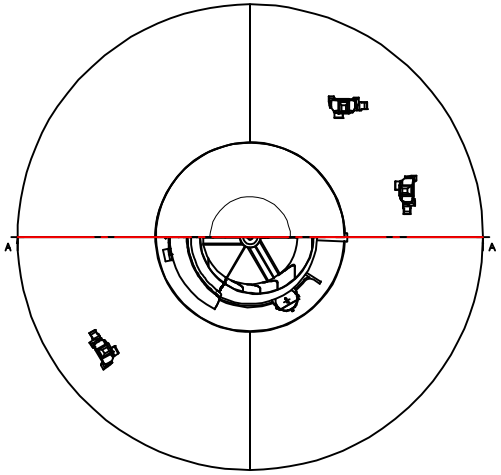


top1
Scale 1:40

| Pos | Part No. | Part Name |
|---|---|---|
| | | |
| | | |
| | | |
| | | |
| | | |
| | | |
| | | |
| | | |

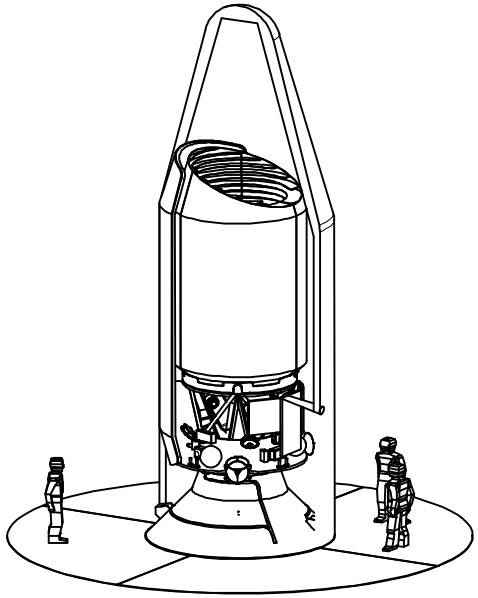

gen1
Scale 1:40

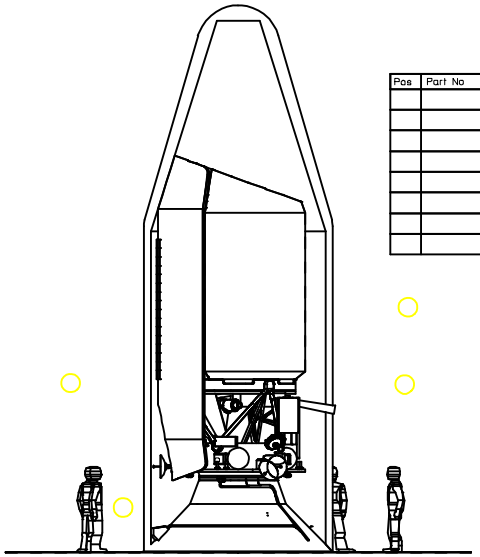

front1
Scale 1:40

| Pos | Part No | Part Name |
|---|---|---|
| | | |
| | | |
| | | |
| | | |
| | | |
| | | |
| | | |
| | | |

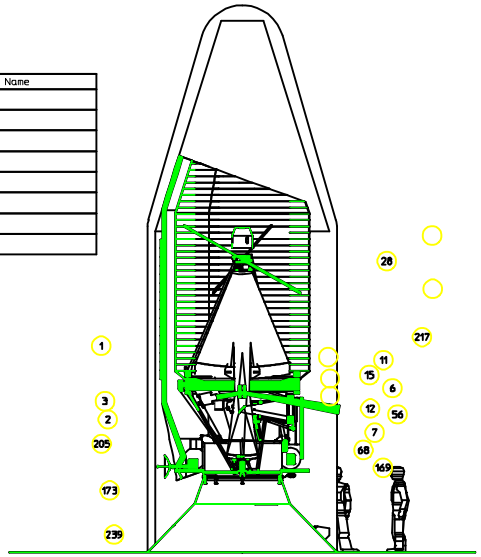


Section A-A
Scale 1:40

00X0006A

| REQD | ITEM | PART NO | DESCRIPTION |
|---|---|---|---|
| - | - | - | - |

| REV | DWG | CHK | ZONE | DATE | CHANGES |
|---|---|---|---|---|---|
| - | - | - | - | - | - |

SHEET 1 OF 1

UNLESS OTHERWISE SPECIFIED
DIMENSIONS: .X ± - FRACT ± - ANGLES ±- .XX ± - FINISH - .XXX ± -
THREADS ARE CLASS 2
TOLERANCE BASIS OF ALL DIMENSIONS AFTER PLATING, PAINTING AND CLEANING WITHIN SAME DIMENSIONAL LIMITS AS BEFORE SUCH TREATMENT.
GENERAL MACHINE JOB ORDER, NO DEDICATED WORK INSTRUCTIONS, WORK WITH SHOP FOREMAN & MACHINE SCHEDULE.
DEBURR ALL EDGES & REMOVE SCALE
SHOP ORDERS
ASSY NO.
SERIAL NO.
MATL SPEC
MATL FORM
SCALE 1:1
QTY
DIST. CODE
MATL TREAT
SURFACE TREATMENT -
LEGEND
CLEAN -
DATE -
DWN -
DATE -
CHK -
DATE -
APP -
DATE -

LAWRENCE BERKELEY LABORATORY
UNIVERSITY OF CALIFORNIA-BERKELEY
FIRST LINE OF TITLE
SECOND LINE OF TITLE
THIRD LINE OF TITLE

| PATENT CLEAR | DWG TYPE | SHEET NO | SCALE |
|---|---|---|---|
| - | - | - | 1:1 |
| INTERCHP/FLUID | MASTER ASSY. NO | CONTROL CODE | DWG. NO. |
| - | | - | 00X0006A |

DO NOT SCALE DRAWING
SIZE REV