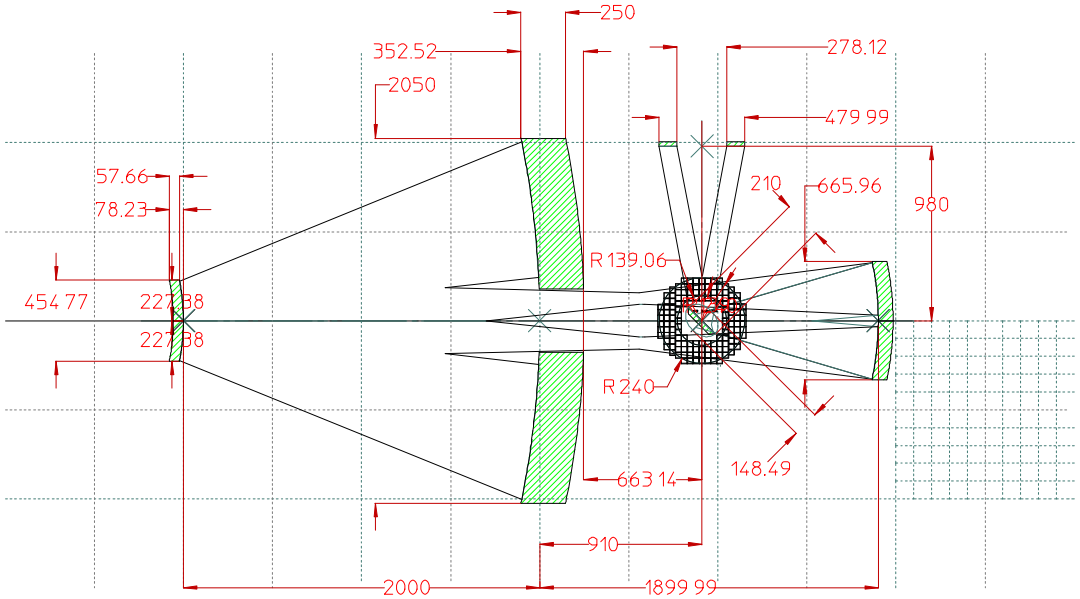

TMA-56_BeamEnvelope

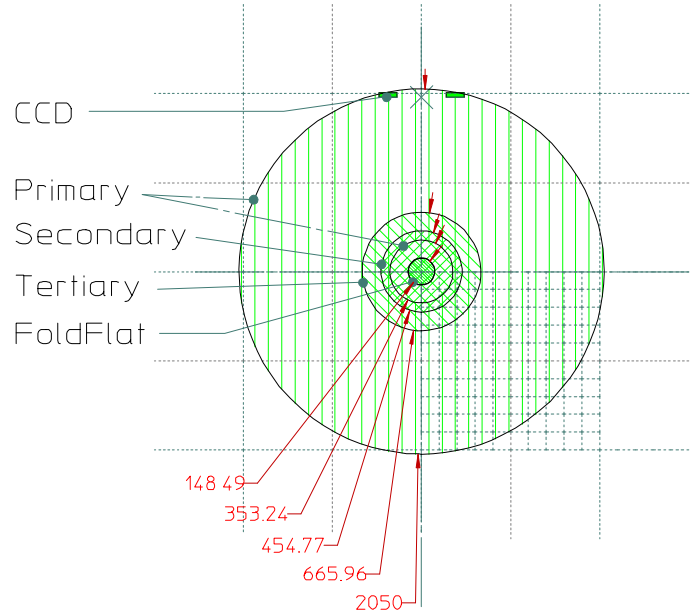

TMA-56_BeamProfiles

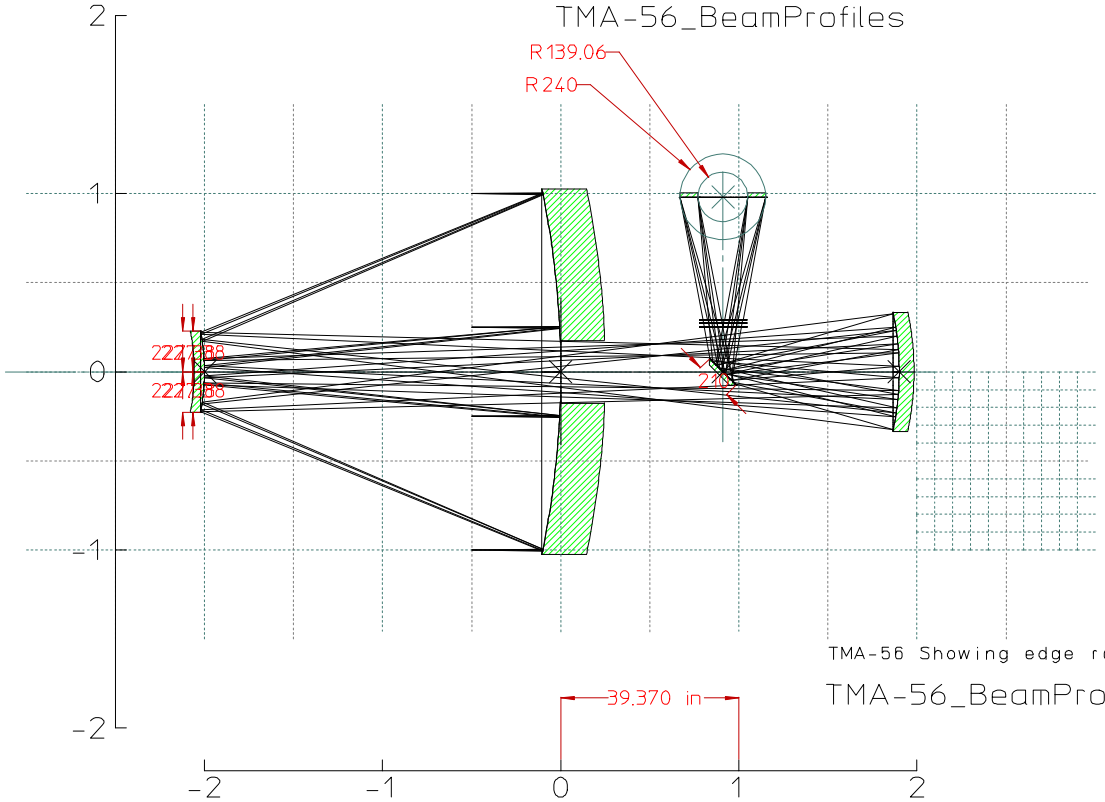

TMA-56 Showing edge rays

TMA-56_BeamProfiles

PARTS STRUCTURE

- TMA-56_Optica.mi
  - TMA-56_BeamEnvelope
  - TMA-56_BeamProfiles
    - Primary
    - Secondary
    - Tertiary
    - FoldFlat
    - CCD