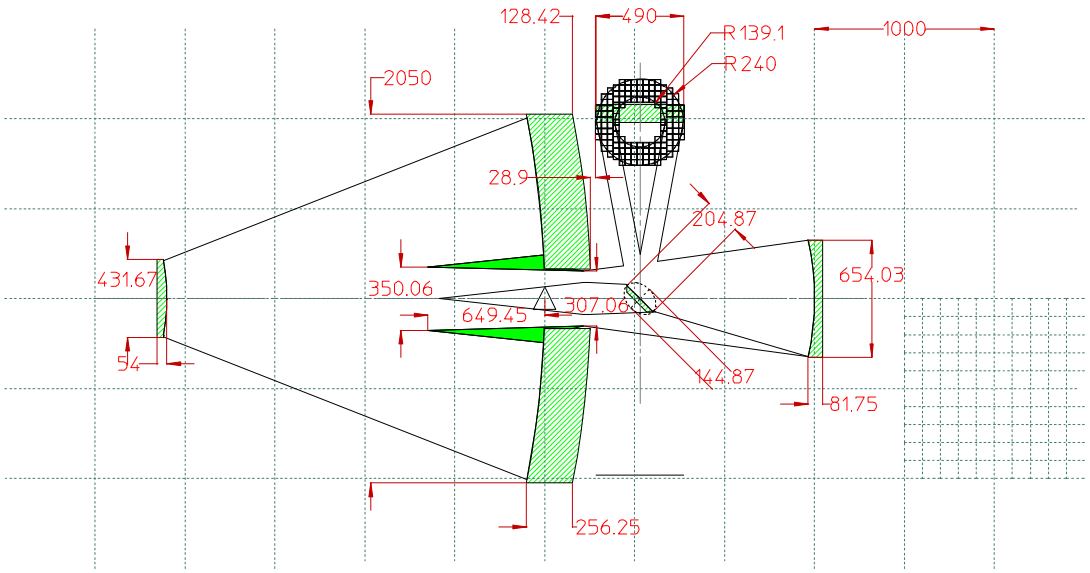

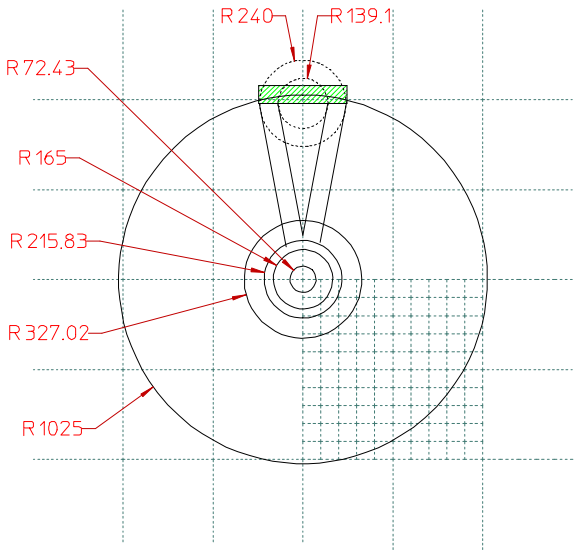

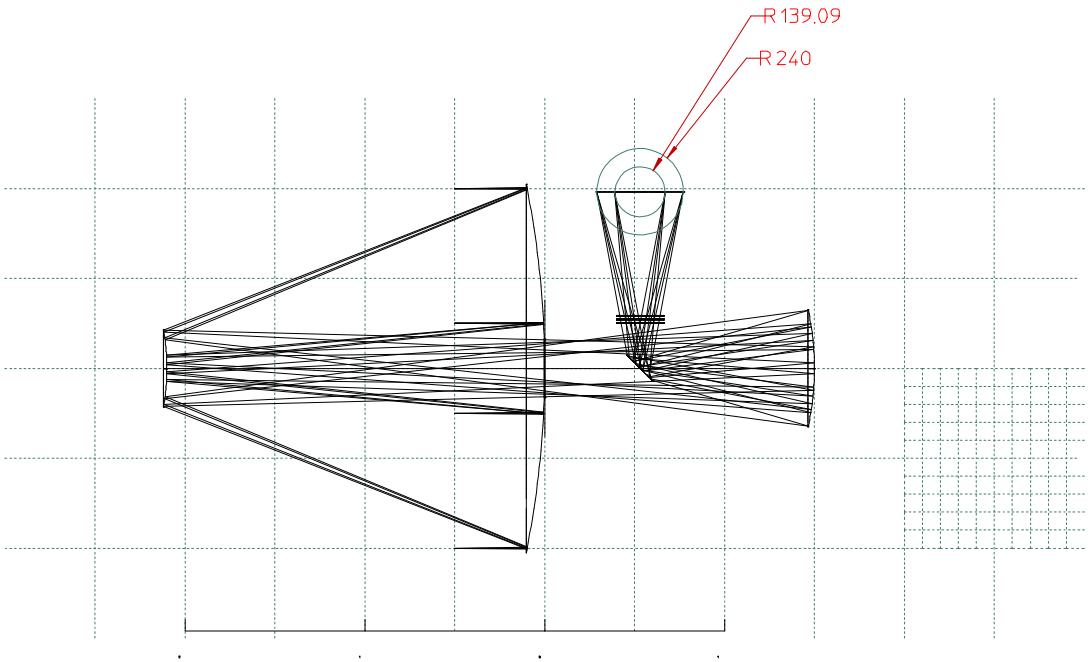

PARTS STRUCTURE

- TMA-55_Optics.mi
  - TMA-55_BeamEnvelope
  - TMA-55_BeamProfiles
    - Primary
    - Secondary
    - Tertiary
    - FoldFlat
    - CCD