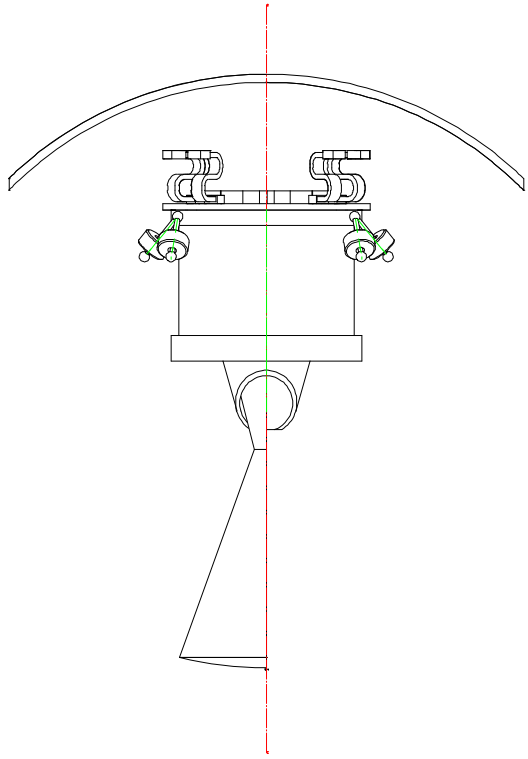

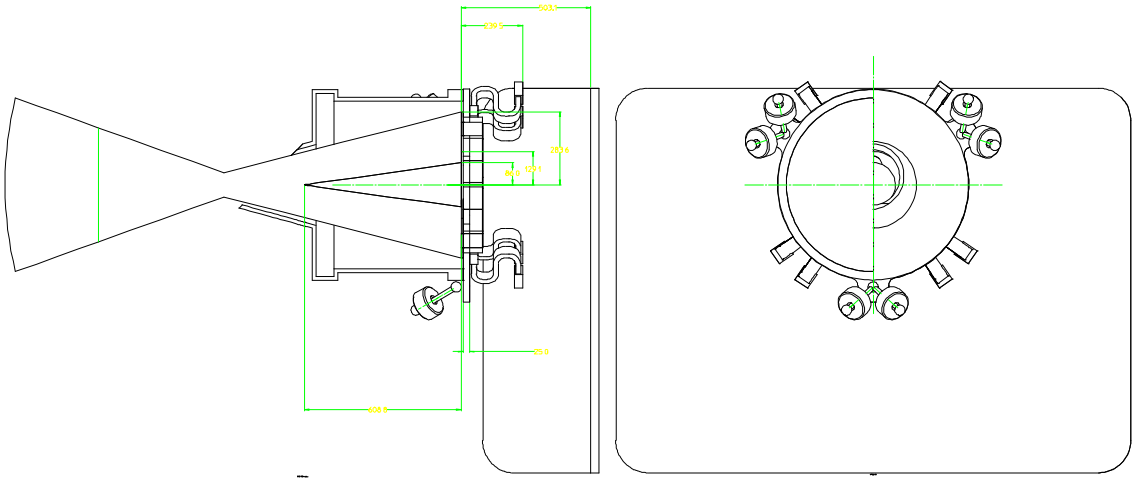

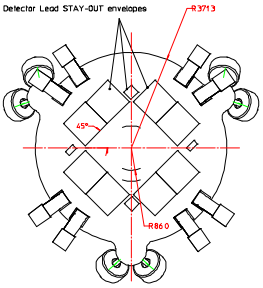

BACK1

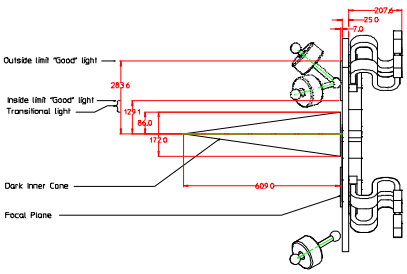

RIGHT1

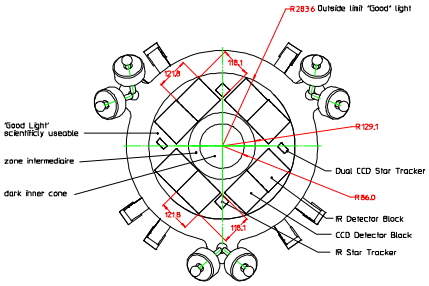

FRONT1

FIDO-101 Focal Plane Layout 12/19/01

File spectro-front-19-12-01.mi
Date: 19-Dec-2001 16:50:34
Author lafever
Dir //me56/lafever/mosaic/spectro-lam
http://www-eng.lbl.gov/~lafever/mosaic/spectro-lam/spectro-front-19-12-01.mi