File: Layout_TMA_SL.dxf
Date: 23-Jun- 101 4:30:31
Author: lafever
Dir: //me56/lafever/mosaic/SNAP/SeaLaunch
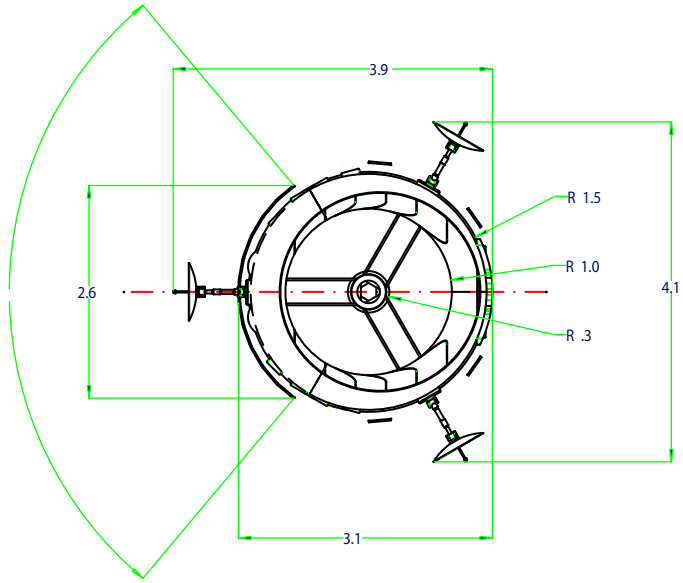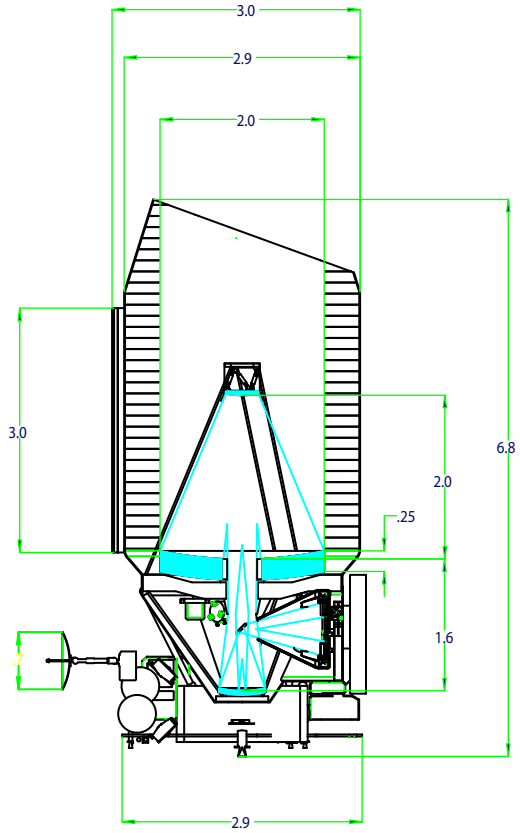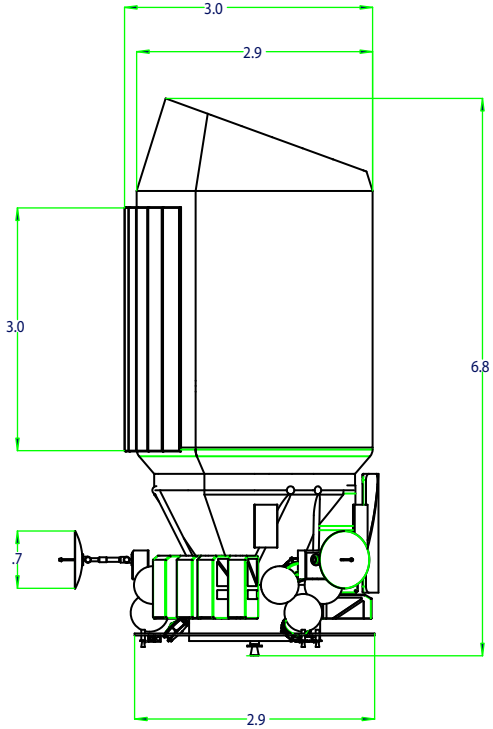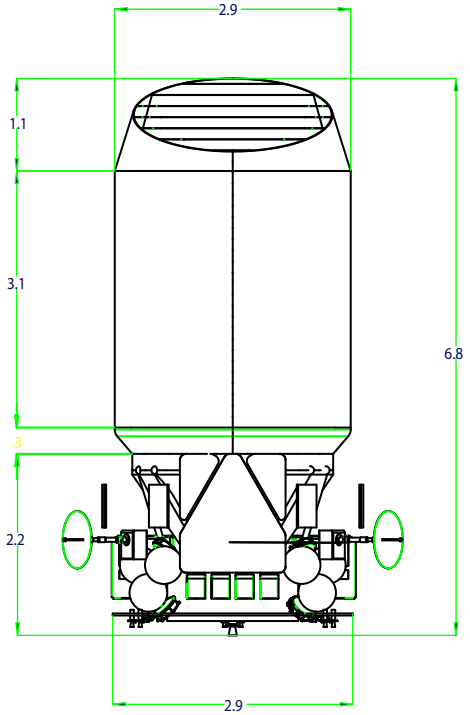
File: Layout_TMA_SL.mi
Date: 23-Jun- 101 4:28:02
Author: lafever
Dir: //me56/lafever/mosaic/SNAP/SeaLaunch