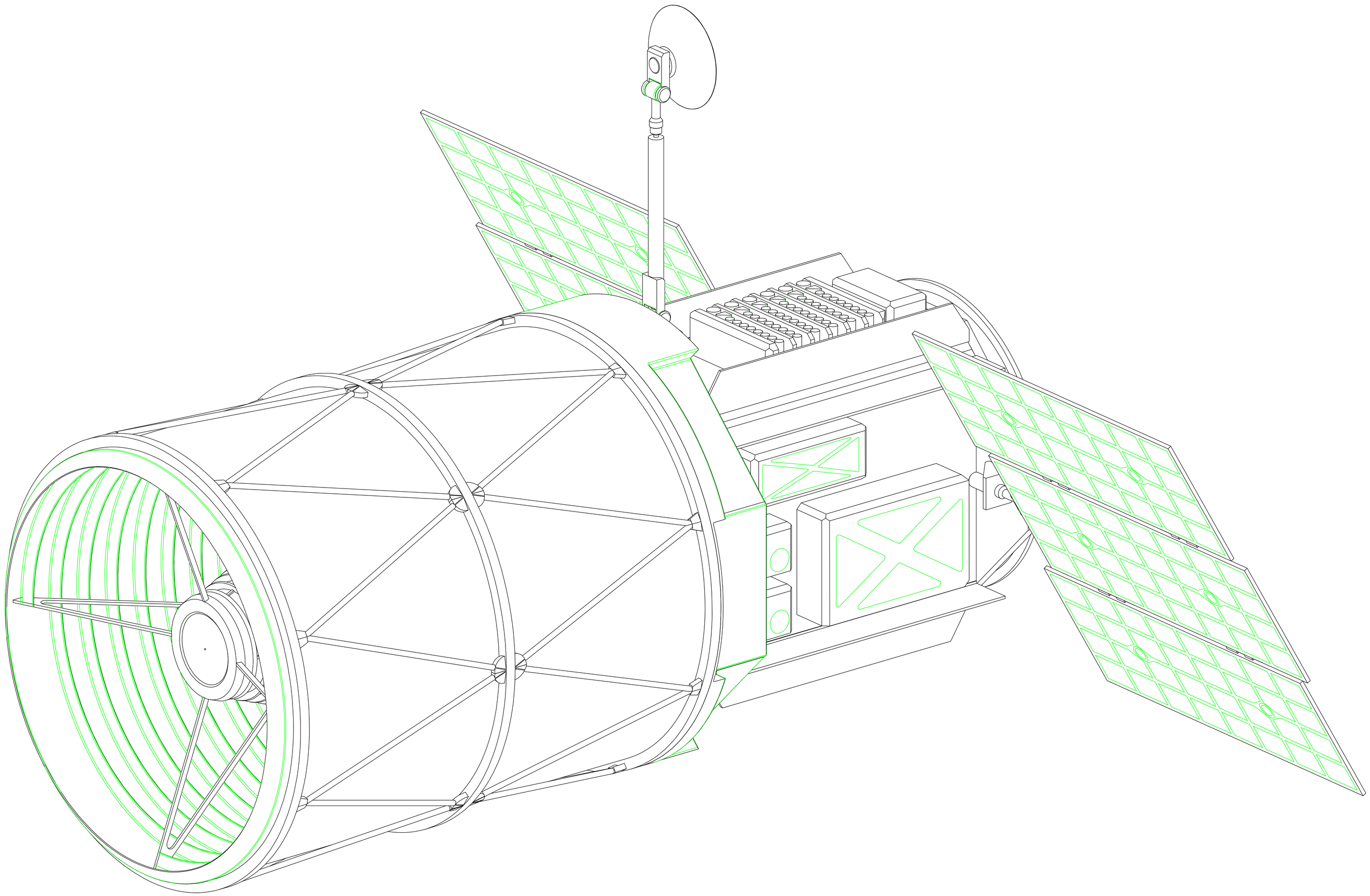

SNAP 1.8 Meter aperture Telescope Fitup

Scope 3a FLYING configuration. 1 Sep 99

File: Scope3aFLYINGfront.mi
Date: 1-Sep-1999 16:40:47
Author: Robin Lafever
Dir: //engcad1/lafever/mosaic/SNAP