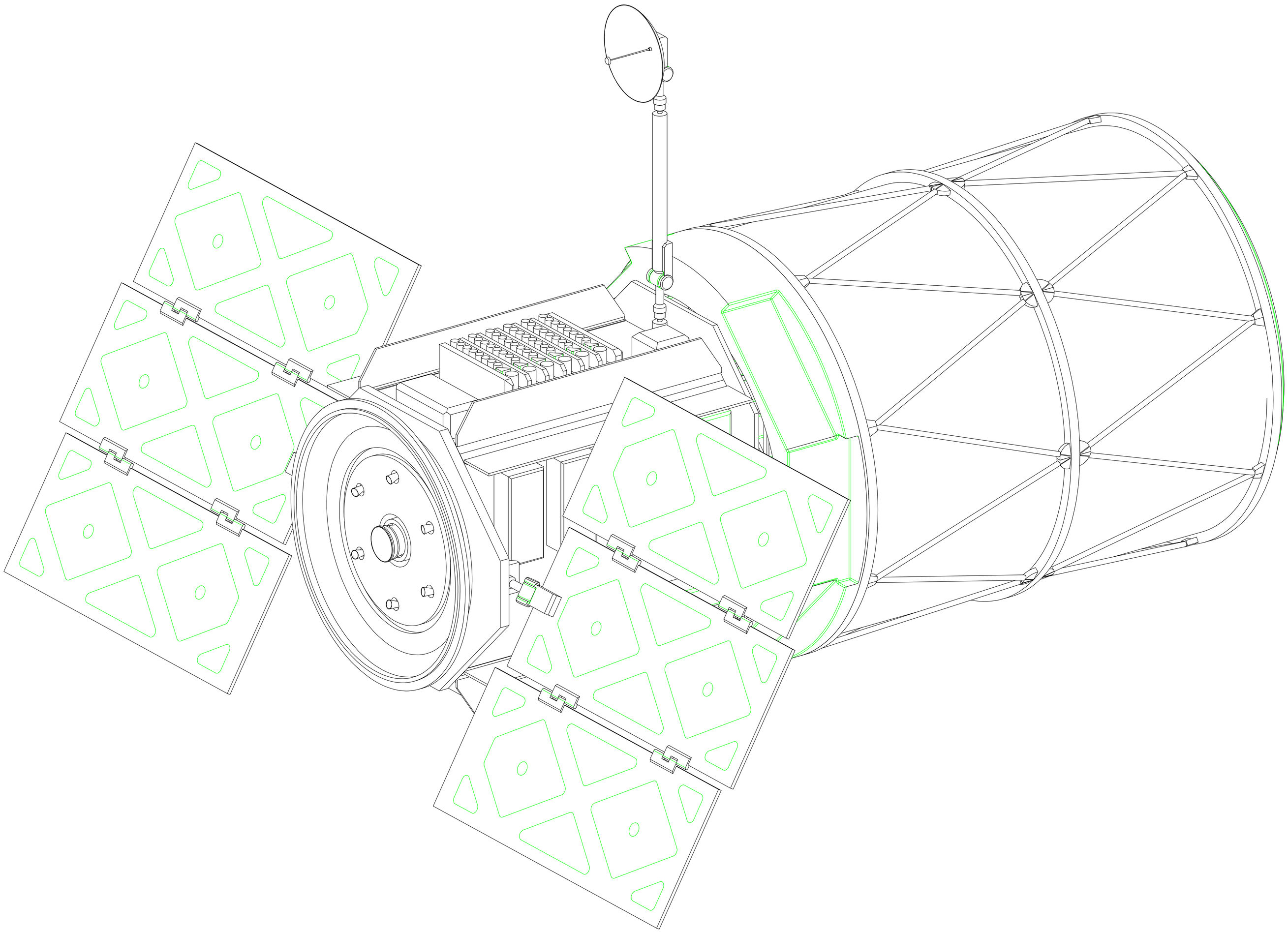

SNAP 1.8 Meter aperture Telescope Fitup

Scope 3a FLYING configuration (Rear) 1 Sep 99

File: Scope3aFLYINGback.mi
Date: 1-Sep-1999 16:37:05
Robin Lafever: lafever
Dir: //engcad1/lafever/mosaic/SNAP