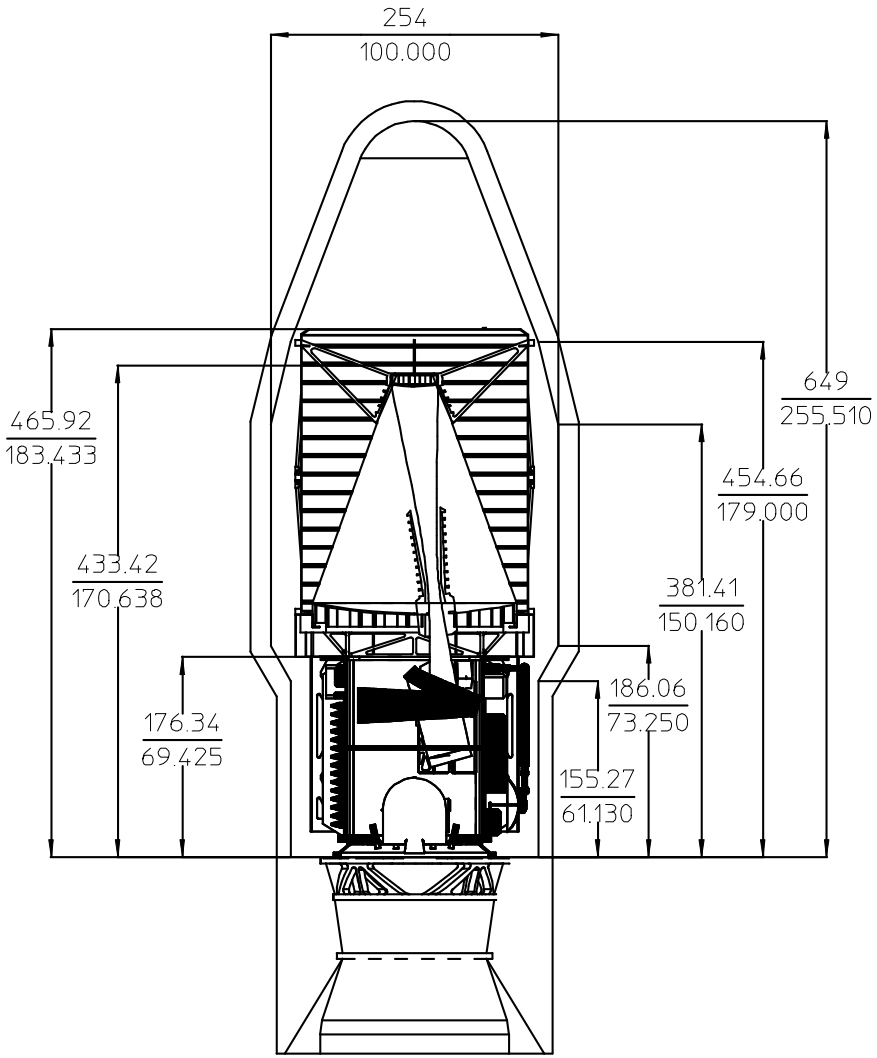

1.8 Meter aperture / 9.5' Nosecone

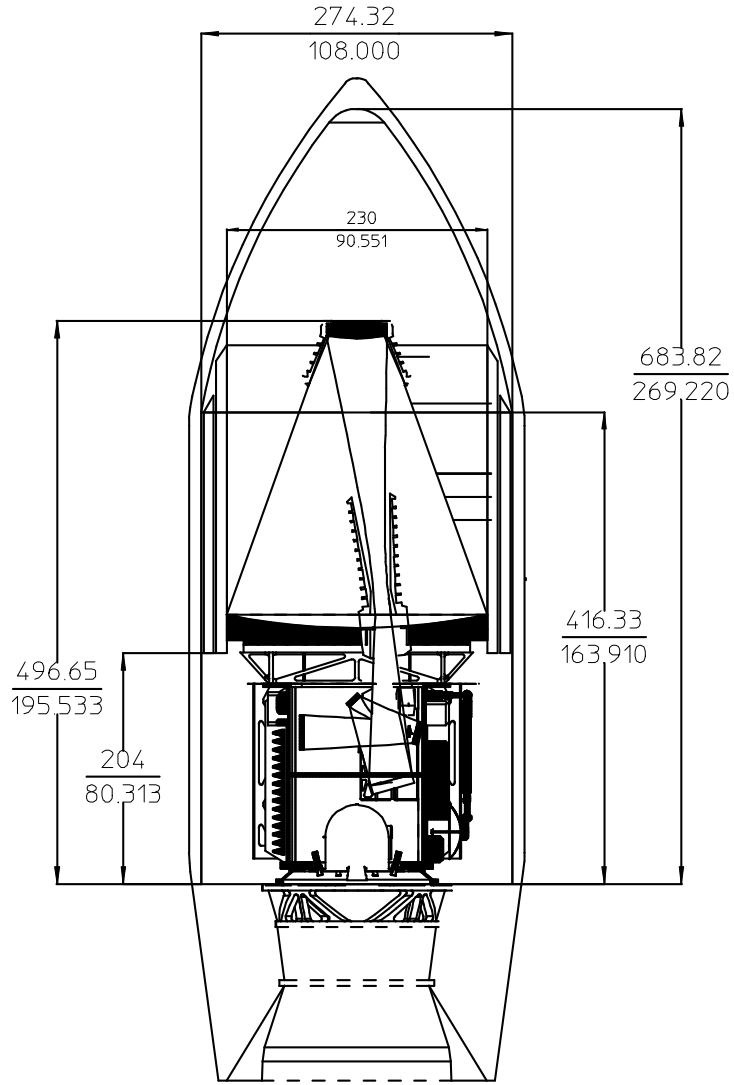

2.3 Meter aperture / 10' Nosecone

SNAP 2.3 Meter aperture Telescope Fitup

Delta II Payload Nose Cone Layouts 1 Sep 99

File: NoseconeFitup_2_3M.ml
Date: 12-Sep-1999 23:42:16
Author: lafever
Dir: //engcad1/lafever/MACROS