DELTA II

Payload Planners Guide

BOEING

DELTA II
PAYLOAD PLANNERS GUIDE

The Delta II Payload Planners Guide has been cleared for public release by the Chief—Air Force Division, Directorate for Freedom of Information and Security Review, Office of the Assistant Secretary of Defense, as stated in letter **95-S-3826/L**, dated **3 October** 1995.

THIS DOCUMENT SUPERSEDES PREVIOUS ISSUES OF THE COMMERCIAL DELTA II PAYLOAD PLANNERS GUIDE, MDC H3224C, DATED OCTOBER 1993

Copyright 1996 by McDonnell Douglas Corporation, all rights reserved under the copyright laws by McDonnell Douglas Corporation

The Boeing Company
5301 Bolsa Avenue, Huntington Beach, CA 92647-2099 (714) 896-3311

PREFACE

The Delta II Payload Planner's Guide (PPG) is issued to potential satellite system users, operators, and spacecraft contractors to provide information regarding the Delta II launch vehicle and its related systems and launch services. On 1 August 1997, the McDonnell Douglas Corporation (MDC) was merged with the Boeing Company. This PPG contains historical references to MDC, which is now the Boeing Company. This document supersedes previous issues of the Delta II Spacecraft Users Manual, MDC H3224, dated July 1987, MDC H3224A/B, dated December 1989, and MDC 93H3224C, dated October 1993.

This PPG has been revised to incorporate the latest Delta II upgrades. These improvements continue the Delta II tradition of continuous evolution to provide The Boeing Company customers with increased payload capacity while concurrently improving operability and produceability.

Among the Delta II improvements included in this edition, customers will find information on:

- the latest avionics upgrades – redundant inertial flight control assembly (RIFCA)
- increased performance from extended nozzles on the three airlit graphite epoxy motors (GEMs)
- the new 10-ft composite payload fairing
- the new First Space Launch Squadron Operations Building (1 SLS OB)

While every effort is made to keep this document current, users are encouraged to contact The Boeing Company directly to obtain the very latest available information on launch vehicle performance as well as spacecraft environments.

Inquiries to clarify or interpret this manual should be directed to The Boeing Company, Delta Program Integration Office, 714-896-3797, or the Delta Commercial Business Office, 714-896-2357. The following communication numbers are available:

FAX
714-896-4459 or
714-896-2452

TELEX
67-8426

E-Mail
robert.s.cowls@boeing.com

CONTENTS

	INTRODUCTION		1
Section 1	**LAUNCH VEHICLE DESCRIPTIONS**		1-1
	1.1	Delta Launch Vehicles	1-1
	1.2	Launch Vehicle Description	1-2
	1.3	Vehicle Axes/Attitude Definitions	1-7
	1.4	Launch Vehicle Insignia	1-7
Section 2	**GENERAL PERFORMANCE CAPABILITY**		2-1
	2.1	Launch Sites	2-1
	2.2	Mission Profiles	2-1
	2.3	Performance Capability	2-5
	2.4	Mission Accuracy Data	2-7
Section 3	**SPACECRAFT FAIRINGS**		3-1
	3.1	General Description	3-1
	3.2	The 2.9-m (9.5 ft) Diameter Spacecraft Fairing	3-2
	3.3	The 3-m (10 ft) Diameter Spacecraft Fairing	3-2
	3.4	The 3-m (10L-ft) Diameter Spacecraft Fairing	3-8
Section 4	**SPACECRAFT ENVIRONMENTS**		4-1
	4.1	Prelaunch Environments	4-1
	4.2	Launch and Flight Environments	4-5
Section 5	**SPACECRAFT INTERFACES**		5-1
	5.1	Delta Third-Stage Description	5-1
	5.2	Payload Attach Fittings for Three-Stage Missions	5-1
	5.3	Payload Attach Fittings for Two-Stage Missions	5-13
	5.4	New PAFs	5-25
	5.5	Test Fittings and Fit-Check Policy	5-37
	5.6	Electrical Design Criteria	5-37
Section 6	**LAUNCH OPERATIONS AT EASTERN RANGE**		6-1
	6.1	Organizations	6-1
	6.2	Facilities	6-1
	6.3	Spacecraft Transport to Launch Site	6-16
	6.4	SLC-17, Pads A and B (CCAS)	6-16
	6.5	Support Services	6-25
	6.6	Delta II Plans and Schedules	6-28
	6.7	Delta II Meetings and Reviews	6-37

Section 7	**LAUNCH OPERATIONS AT WESTERN RANGE**		7-1
	7.1	Organizations	7-1
	7.2	Facilities	7-1
	7.3	Spacecraft Transport to Launch Site	7-18
	7.4	Space Launch Complex 2	7-22
	7.5	Support Services	7-23
	7.6	Delta II Plans and Schedules	7-34
	7.7	Delta II Meetings and Reviews	7-42
Section 8	**SPACECRAFT INTEGRATION**		8-1
	8.1	Integration Process	8-1
	8.2	Documentation	8-2
	8.3	Launch Operations Planning	8-3
	8.4	Spacecraft Processing Requiremens	8-3
Section 9	**SAFETY**		9-1
	9.1	Safety Requirements	9-1
	9.2	Documentation Requirements	9-2
	9.3	Hazardous Systems and Operations	9-3
	9.4	Waivers	9-4
Appendix A	**DELTA MISSIONS CHRONOLOGY**		A-1
Appendix B	**NATURAL AND TRIGGERED LIGHTNING LAUNCH COMMIT CRITERIA**		B-1

FIGURES

1-1	Delta/Delta II Growth To Meet Customer Needs	1-1
1-2	Delta II Configurations	1-2
1-3	Delta 7925 Launch Vehicle	1-4
1-4	Delta 7920-10 Launch Vehicle	1-5
1-5	Delta Payload Fairings	1-8
1-6	Vehicle Axes	1-9
2-1	Typical Two-Stage Mission Profile	2-1
2-2	Typical Three-Stage Mission Profile	2-1
2-3	Typical Delta II 7320 Mission Profile—Circular Orbit Mission (Eastern Range)	2-3
2-4	Typical Delta II 7320 Mission Profile—Polar Orbit Mission (Western Range)	2-3
2-5	Typical Delta II 7925 Mission Profile—GTO Mission (Eastern Range)	2-4
2-6	Typical Delta II 7920 Mission Profile—Polar Mission (Western Range)	2-4
2-7	Delta II 7320 Vehicle, Two-Stage Perigee Velocity Capability, Eastern Range	2-8
2-8	Delta II 7320 Vehicle, Two-Stage Apogee Altitude Capability, Eastern Range	2-9
2-9	Delta II 7320 Vehicle, Two-Stage Circular Orbit Capability, Eastern Range	2-10
2-10	Delta II 7325 Vehicle, Three-Stage Perigee Velocity Capability, Eastern Range	2-11
2-11	Delta II 7325 Vehicle, Three-Stage Planetary Mission Capability, Eastern Range	2-12
2-12	Delta II 7320 Vehicle, Two-Stage Perigee Velocity Capability, Western Range	2-13
2-13	Delta II 7320 Vehicle, Two-Stage Apogee Altitude Capability, Western Range	2-14
2-14	Delta II 7320 Vehicle, Two-Stage Circular Orbit Capability, Western Range	2-15
2-15	Delta II 7320 Vehicle, Two-Stage Sun-Synchronous Orbit Capability, Western Range	2-16
2-16	Delta II 7920 Vehicle, Two-Stage Perigee Velocity Capability, Eastern Range	2-17
2-17	Delta II 7920 Vehicle, Two-Stage Apogee Altitude Capability, Eastern Range	2-18
2-18	Delta II 7920 Vehicle, Two-Stage Circular Orbit Capability, Eastern Range	2-19
2-19	Delta II 7925 Vehicle, Three-Stage Perigee Velocity Capability, Eastern Range	2-20
2-20	Delta II 7925 Vehicle, Three-Stage Apogee Altitude Capability, Eastern Range	2-21
2-21	Delta II 7925 Vehicle, Three-Stage GTO Inclination Capability, Eastern Range	2-22

2-22	Delta II 7925 Vehicle, Three-Stage Planetary Mission Capability Eastern Range	2-23
2-23	Delta II 7920 Vehicle, Two-Stage Perigee Velocity Capability, Western Range	2-24
2-24	Delta II 7920 Vehicle, Two-Stage Apogee Altitude Capability, Western Range	2-25
2-25	Delta II 7920 Vehicle, Two-Stage Circular Orbit Capability, Western Range	2-26
2-26	Delta II 7920 Vehicle, Two-Stage Sun-Synchronous Orbit Capability, Western Range	2-27
2-27	Delta II 7925 Vehicle, Three-Stage Perigee Velocity Capability, Western Range	2-28
2-28	Delta II 7925 Vehicle, Three-Stage Apogee Altitude Capability, Western Range	2-29
2-29	Delta II 7925 Vehicle, Three-Stage GTO Deviations, Eastern Range	2-30
3-1	Delta 2.9-m (9.5 ft) Payload Fairing	3-3
3-2	Profile, 2.9-m (9.5 ft) Diameter Fairing	3-4
3-3	Spacecraft Envelope, 2.9-m (9.5 ft) Diameter Fairing, Three-Stage Configuration (3712 PAF)	3-5
3-4	Spacecraft Envelope, 2.9-m (9.5 ft) Diameter, Two-Stage Configuration (6915 PAF)	3-6
3-5	Profile, 3-m (10 ft) Composite Fairing	3-7
3-6	Spacecraft Envelope, 3-m (10 ft) Diameter Fairing, Three-Stage Configuration (3712 PAF)	3-9
3-7	Spacecraft Envelope, 3-m (10-ft) Diameter Fairing, Two-Stage Configuration (6915 PAF)	3-10
3-8	Profile, 3m (10-ft) 10L Composite Fairing	3-11
3-9	Spacecraft Envelope, 3-m (10-ft) Diameter 10L Fairing, Three-Stage Configuration (3712) PAF	3-12
3-10	Spacecraft Envelope, 3-m (10-ft) Diameter 10L Fairing, Two-Stage Configuration (6915) PAF	3-13
4-1	Payload Air Distribution System	4-1
4-2	Delta II Payload Fairing Compartment Absolute Pressure Envelope	4-6
4-3	Predicted Maximum Internal Wall Temperatures and Internal Surface Emittances (9.5-ft Fairing)	4-7
4-4	Predicted Maximum Internal Wall Temperatures and Internal Surface Emittances (10-ft Fairing)	4-8
4-5	Predicted Star 48B Plume Radiation at the Spacecraft Separation Plane Versus Radial Distance	4-9
4-6	Predicted Star 48B Plume Radiation at the Spacecraft Separation Plane Versus Burn Time	4-10

4-7	Predicted Star 48B Motor Case Soakback Temperature	4-10
4-8	Axial Steady-State Acceleration at MECO Versus Second-Stage Payload Weight	4-11
4-9	Axial Steady-State Acceleration at Third-Stage Burnout	4-12
4-10	Predicted Delta II 7920 and 7925 9.5-ft Fairing Spacecraft Acoustic Environment	4-13
4-11	Predicted Delta II 7920 and 7925 10-ft Fairing Spacecraft Acoustic Environment	4-14
4-12	Maximum Flight Spacecraft Interface Shock Environment—3712A, 3712B, 3712C Payload Attach Fitting	4-16
4-13	Maximum Flight Spacecraft Interface Shock Environment—6306 Payload Attach Fitting	4-16
4-14	Maximum Flight Spacecraft Interface Shock Environment—6019 and 6915 Payload Attach Fitting	4-17
4-15	Maximum Flight Spacecraft Interface Shock Environment—5624 Payload Attach Fitting	4-17
4-16	Delta II Spin Rate Capability	4-23
4-17	Maximum Expected Angular Acceleration Versus Spin Rate	4-23
5-1	Delta II Upper Stage	5-1
5-2	3712 PAF Assembly	5-3
5-3	Capability of the 3712 PAF Configuration 7925 Vehicle	5-3
5-4	3712 PAF Detailed Assembly	5-4
5-5	3712A PAF Detailed Dimensions	5-5
5-6	3712A PAF Spacecraft Interface Dimensional Constraints	5-5
5-7	3712A PAF Spacecraft Interface Dimensional Constraints (Views C, D, E, and Section B-B)	5-6
5-8	3712B PAF Detailed Dimensions	5-7
5-9	3712B PAF Spacecraft Interface Dimensional Constraints	5-7
5-10	3712B PAF Spacecraft Interface Dimensional Constraints (Views C, D, E, and Section B-B)	5-8
5-11	3712C PAF Detailed Dimensions	5-9
5-12	3712C PAF Spacecraft Interface Dimensional Constraints	5-9
5-13	3712C PAF Spacecraft Interface Dimensional Constraints (Views B-B, C, D, and E)	5-10
5-14	3712 PAF Interface	5-11
5-15	3712 Clamp Assembly and Spring Actuator	5-12
5-16	3712 PAF Bolt Cutter Detailed Assembly	5-13
5-17	6019 PAF Assembly	5-14

5-18	Capability of the 6019 PAF on 7920 Vehicle	5-15
5-19	6019 PAF Spacecraft Interface Dimensional Constraints	5-16
5-20	6019 PAF Detailed Assembly	5-17
5-21	6019 PAF Spacecraft Assembly	5-18
5-22	6019 PAF Detailed Dimensions	5-18
5-23	6915 PAF	5-19
5-24	Capability of the 6915 PAF on 7920 Vehicle	5-19
5-25	6915 PAF Detailed Assembly	5-21
5-26	6915 PAF Spacecraft Interface Dimensional Constraints	5-22
5-27	6915 PAF Spacecraft Assembly	5-23
5-28	6915 PAF Detailed Dimensions	5-23
5-29	Actuator Assembly Installation–6915 PAF	5-24
5-30	6306 PAF Assembly	5-25
5-31	6306 PAF Detailed Dimensions	5-26
5-32	6306 PAF Detailed Dimensions	5-27
5-33	6306 PAF Spacecraft Interface Dimensional Constraints	5-28
5-34	6306 PAF Spacecraft Interface Dimensional Constraints	5-29
5-35	Capability of the 6306 PAF on 7920 Vehicle	5-30
5-36	6306 Secondary Latch	5-31
5-37	5624 PAF Detailed Assembly	5-32
5-38	5624 PAF Detailed Dimensions	5-33
5-39	5624 PAF Clamp Assembly and Spring Actuator	5-34
5-40	5624 PAF Spacecraft Interface Dimensional Constraints	5-35
5-41	5624 PAF Spacecraft Interface Dimensional Constraints	5-36
5-42	Capability of 5624 PAF on 7900 Vehicle	5-37
5-43	Typical Delta II Wiring Configuration	5-39
5-44	Typical Payload-to-Blockhouse Wiring Diagram for Three-Stage Missions at SLC-17	5-41
5-45	Typical Payload-to-Blockhouse Wiring Diagram for Three-Stage Missions at SLC-2	5-42
5-46	Typical Spacecraft Umbilical Connector	5-43
5-47	Spacecraft/Fairing Umbilical Clearance Envelope	5-43
5-48	Typical Spacecraft Separation Switch and PAF Switch Pad	5-44
5-49	Spacecraft/Pad Safety Console Interface for SLC-17	5-44
5-50	Spacecraft/Pad Safety Console Interface for SLC-17-Operations Building Configuration	5-45

6-1	Organizational Interfaces for Commercial Users	6-2
6-2	Astrotech Site Location	6-3
6-3	Astrotech Complex Location	6-3
6-4	Astrotech Building Locations	6-3
6-5	First Level Floor Plan, Building 1/1A, Astrotech	6-5
6-6	Second Level Floor Plan, Building 1/1A, Astrotech	6-6
6-7	Building 2 Detailed Floor Plan, Astrotech	6-8
6-8	Building 3 Detailed Floor Plan, Astrotech	6-9
6-9	Building 4 Detailed Floor Plan, Astrotech	6-9
6-10	Building 5 Detailed Floor Plan, Astrotech	6-10
6-11	Building 6 Detailed Floor Plan, Astrotech	6-10
6-12	Delta Spacecraft Checkout Facilities	6-11
6-13	Cape Industrial Area	6-11
6-14	Building AE Floor Plan	6-12
6-15	Building AE Mission Director Center	6-13
6-16	SAEF-2 Floor Plan	6-14
6-17	Electrical-Mechanical Testing Facility Floor Plan	6-16
6-18	Delta II Upper Stage Assembly Ground-Handling Can and Transporter	6-17
6-19	SLC-17, CCAS	6-19
6-20	SLC-17—Aerial View, Facing South	6-19
6-21	Environmental Enclosure Work Levels	6-20
6-22	Level 9A Floor Plan, Pads 17A and 17B	6-21
6-23	Level 9B Floor Plan, Pads 17A and 17B	6-21
6-24	Level 9C Floor Plan, Pads 17A and 17B	6-22
6-25	Blockhouse Console Locations	6-22
6-26	Spacecraft-to-Blockhouse Junction Box	6-23
6-27	Spacecraft Customer Accomodations—Launch Control Center	6-23
6-28	Interface Overview—Spacecraft Control Rack in 1 SLS OB	6-24
6-29	Launch Decision Flow for Commercial Missions—Eastern Range	6-25
6-30	Delta II 792X Ground Wind Velocity Criteria, SLC-17	6-26
6-31	Typical Mission Plan	6-29
6-32	Typical Spacecraft Weighing (F-11 Day)	6-29
6-33	Typical Mating of Spacecraft and Third Stage (F-10 Day)	6-30
6-34	Typical Final Spacecraft Third-Stage Preparations (F-9 Day)	6-30
6-35	Typical Installation of Transportation Can (F-8 Day)	6-31
6-36	Typical Spacecraft Erection (F-7 Day)	6-31

6-37	Typical Flight Program Verification and Stray Voltage Checks (F-6 Day)	6-32
6-38	Typical Ordnance Installation and Hookup (F-5 Day)	6-32
6-39	Typical Fairing Installation (F-4 Day)	6-33
6-40	Typical Fairing Installation (F-4 Day)	6-33
6-41	Typical Propellant Loading Preparations (F-3 Day)	6-34
6-42	Typical Second-Stage Propellant Loading (F-2 Day)	6-34
6-43	Typical Beacon, Range Safety, and Class A Ordnance (F-1 Day)	6-35
6-44	Typical Delta Countdown (F-0 Day)	6-35
6-45	Typical Terminal Countdown (F-0 Day)	6-36
7-1	Launch Base Organization at VAFB for Commercial Launches	7-2
7-2	Vandenberg Air Force Base	7-3
7-3	Spacecraft Support Area	7-4
7-4	Spacecraft Laboratory (Building 836)	7-5
7-5	Launch Vehicle Data Center, Building 836, Vandenberg AFB	7-6
7-6	NASA Building 840	7-7
7-7	Mission Director Center—Building 840	7-8
7-8	Hazardous Processing Facility	7-9
7-9	Spin Test Building (Building 1610)	7-10
7-10	Control Room Building 1605 Floor Plan	7-11
7-11	Astrotech Payload Processing Area	7-12
7-12	Astrotech Payload Processing Facility—Building 1032	7-13
7-13	California Spaceport—Plan View of the IPF	7-14
7-14	California Spaceport—IPF Cross-Sectional View	7-14
7-15	California Spaceport—Cutaway View of the IPF (looking South)	7-15
7-16	California Spaceport—Processing Area	7-19
7-17	California Spaceport—Level 89 Technical Support Area	7-20
7-18	California Spaceport—Level 101 Technical Support Area	7-20
7-19	Upper-Stage Assembly Ground Handling Can and Transporter	7-21
7-20	Space Launch Complex-2, Vandenberg Test Center	7-22
7-21	Space Launch Complex SLC-2, VAFB—Aerial View Looking East	7-23
7-22	SLC-2 MST/FUT Elevation	7-24
7-23	Level 5 of SLC-2 Mobile Service Tower—Plan View	7-25
7-24	Level 6 of SLC-2 Mobile Service Tower—Plan View	7-26
7-25	Spacecraft Work Levels in SLC-2 Mobile Service Tower—VAFB	7-27
7-26	Whiteroom Elevations and Hook Heights—SLC-2 Mobile Service Tower	7-28
7-27	SLC-2 Blockhouse	7-29

7-28	SLC-2 Blockhouse Control Room	7-29
7-29	Spacecraft Blockhouse Console—Western Range	7-30
7-30	Launch Decision Flow for Commercial Missions—Western Range	7-31
7-31	Delta II 792X Ground Wind Velocity Criteria, SLC-2	7-32
7-32	Typical Mission Plan	7-35
7-33	Typical Spacecraft Weighing (F-12 Day)	7-35
7-34	Typical Spacecraft/PAM Mate (F-11 Day)	7-36
7-35	Typical Spacecraft/PAM Final Preparations (F-10 Day)	7-36
7-36	Typical Transportation Can Installation (F-9 Day)	7-37
7-37	Typical Spacecraft Erection (F-8 Day)	7-37
7-38	Typical Flight Program Verification and Saftety Stray Voltage Checks (F-7 Day)	7-38
7-39	Typical Ordnance Installation (F-6 Day)	7-38
7-40	Typical Fairing Installation (F-5 Day)	7-39
7-41	Typical Fairing Finaling (F-4 Day)	7-39
7-42	Typical Fairing Finaling (F-3 Day)	7-40
7-43	Typical Second-Stage Propellant Loading (F-2 Day)	7-40
7-44	Typical Beacon, Range Safety, and Class A Ordnance (F-1 Day)	7-41
7-45	Typical Delta Countdown (F-0 Day)	7-41
8-1	Mission Integration Process	8-1
8-2	Typical Delta II Agency Interfaces	8-2
8-3	Typical Document Interfaces	8-3
8-4	Typical Integration Planning Schedule	8-14
8-5	Launch Operational Configuration Development	8-15
9-1	General Safety Documentation Flow for Commercial Missions	9-3

TABLES

1-1	Delta Four-Digit Designation	1-3
1-2	Delta II Vehicle Description	1-6
1-3	Delta II Vehicle Characteristics	1-6
2-1	Delta II Typical Eastern Range Event Times	2-5
2-2	Delta II Typical Western Range Event Times	2-5
2-3	Mission Capabilities	2-6
3-1	Typical Acoustic Blanket Configurations	3-1
4-1	Eastern Range Facility Environments	4-2
4-2	Western Range Facility Environments	4-2
4-3	Delta II Transmitter Characteristics	4-3
4-4	Cleanliness Level Definition	4-4
4-5	Spacecraft CG Limit-Load Factors (g)	4-13
4-6	Spacecraft Acoustic Environment Figure Reference	4-13
4-7	Sinusoidal Vibration Levels	4-14
4-8	Spacecraft Interface Shock Environment Figure Reference	4-15
4-9	Acoustic Test Levels, Delta II 7925 9.5-ft Fairing, Three-Stage Mission, 3.0-in. Blanket Configuration	4-19
4-10	Acoustic Test Levels, Delta II 7920 9.5-ft Fairing, Two-Stage Mission, 3.0-in. Blanket Configuration	4-19
4-11	Acoustic Test Levels, Delta II 7920 and 7925 10-ft Fairing, Two- and Three-Stage Mission, 3.0-in. Blanket Configuration	4-20
4-12	Sinusoidal Vibration Acceptance Test Levels	4-20
4-13	Sinusoidal Vibration Qualification Test Levels	4-20
4-14	Sinusoidal Vibration Protoflight Test Levels	4-20
4-15	Third Stage Mass Properties	4-24
4-16	NCS Nominal Characteristics	4-24

5-1	Notes Used in Configuration Drawings	5-2
5-2	Maximum Clamp Assembly Preload	5-2
5-3	Separation Clamp Assemblies	5-37
5-4	One-Way Line Resistance	5-40
5-5	Disconnect Pull Forces (Lanyard Plugs)	5-42
5-6	Disconnect Forces (Rack and Panel Connectors)	5-42
5-7	Disconnect Forces (Bayonet-Mate Lanyards)	5-43
6-1	Test Console Items	6-16
7-1	Vehicle Checkout Facility	7-16
7-2	Vehicle Checkout Area	7-16
7-3	Payload Checkout Cells Capabilities	7-17
7-4	Transfer Tower Area	7-18
7-5	Fairing Storage and Assembly Area	7-18
7-6	Payload Processing Room 6902	7-19
7-7	Payload Processing Room (PPR) 8910	1-19
8-1	Space Agency Data Requirements	8-4
8-2	MDA Program Documents	8-4
8-3	Required Documents	8-5
8-4	Spacecraft Questionnaire	8-9
8-5	Typical Spacecraft Launch Site Test Plan	8-12
8-6	Data Required for Orbit Parameter Statement	8-13
8-7	Spacecraft Checklist	8-16
9-1	Safety Document Applicability	9-2

GLOSSARY

1 SLS OB	First Space Launch Squadron Operations Building
30 SW	30th Space Wing
45 SW	45th Space Wing
A/C	air conditioning
ACS	attitude control system
ADOTS	Advanced Delta ordnance test set
AFB	Air Force Base
AGE	aerospace ground equipment
AKM	apogee kick motor
AL	air-lit
ALC	advanced launch control system
AMP	Ampers
ANSI	American National Standard Institute
ARAR	Accident Risk Assessment Report
ASO	Astrotech Space Operations
ATP	authority to proceed
AUV	avionics upgraded vehicle
AWG	American Wire Gauge
BAS	breathing air supply
B/H	blockhouse
CAD	computer-aided design
CCAS	Cape Canaveral Air Station
CG	center of gravity
C/O	checkout
CRD	command receiver decoder
CWA	clean work area
DBL	Dynamic Balance Laboratory
DID	data item descriptions
DIGS	Delta Inertial Guidance System
DMCO	Delta mission checkout
DOT	Department of Transportation
DRIMS	Delta redundant inertial measurement system
DTO	detailed test objectives
E&O	engineering and operations
EAL	Entry Authority List
EED	electro-explosive device
EMF	electromagnetic field
EMI	electromagnetic interference
EMT	Electrical-Mechanical Testing Facility
ER	Eastern Range
ESA	Explosive Safe Area
E/W	east/west
EWR	Eastern Western Regulation
FAA	Federal Aviation Administration
FO	fiber-optic
FRR	flight readiness review
FS	first stage
FSAA	fairing storage and assembly area
FUT	fixed umbilical tower
GC	guidance computer
GC&NS	guidance, control, and navigation system
GEM	graphite-epoxy motor
GL	ground-lit
GMT	Greenwich meantime
GN_2	gaseous nitrogen
GSE	ground support equipment
GSFC	Goddard Space Flight Center
GTO	geosynchronous transfer orbit
H_2	hydrogen
HDBK	handbook
H/H	hook height
HPF	hazardous processing facility
HPTF	high pressure test facility
I/F	interface
IIP	instantaneous impact point
IPF	integrated processing facility
J-box	junction box
KMI	KSC Management Instruction
KSC	Kennedy Space Center
LEO	low Earth orbit
LCC	Launch Control Center
LCE	launch control equipment
LO_2	liquid oxygen

LOCC	launch operations control center
LOP	Launch Operations Plan
LOX	Liquid Oxygen
LPD	Launch Processing Document
LRR	launch readiness review
LSRR	launch site readiness review
LSSM	Launch Site Support Manager
LSTP	Launch Site Test Plan
LV	launch vehicle
LVDC	Launch Vehicle Data Center
MD	Mission Director
MDA	McDonnell Douglas Aerospace
MDC	Mission Director Center
MDC	McDonnell Douglas Corporation
MECO	main-engine cutoff
MIC	meets intent certification
MMS	multimission modular spacecraft
MOI	moments of inertia
MRTB	Missile Research Test Building
MSPSP	Missile Systems Prelaunch Safety Package
MSR	Mission Support Request
MST	mobile service tower
NASA	National Aeronautics and Space Administration
NCS	nutation control system
NDTL	Nondestructive Testing Laboratory
N/S	north/south
NOAA	National Oceanographic and Astronautic Agency
OASPL	overall sound pressure level
OLS	Orbital Launch Services
OR	Operations Requirement
OVS	operational voice system
PAM	payload assist module
P&C	power and control
PAF	payload attach fitting
PCC	payload checkout cell
PCM	pulse coded modulated
PCS	probability of command shutdown
PEA	payload encapsulation area
PGOC	payload ground operations contract
PHE	propellant handler's ensemble
PI	program introduction
PLF	payload fairing
PMA	Preliminary Mission Analysis
P/N	part number
PPF	payload processing facility
PPG	Payload Planners Guide
PPR	payload processing room
PPRD	Payload Processing Requirements Document
PRD	Program Requirements Document
PSM	Program Support Manager
PSP	Program Support Plan
PSSC	pad safety supervisor's console
PWU	portable weigh unit
QD	quick disconnect
RACS	redundant attitude control system
RCS	reaction control system
RF	radio frequency
RFA	radio frequency application
RFI	radio frequency interference
RGA	rate gyro assembly
RIFCA	Eedundant Inertial Flight Control Assembly
ROS	Range Operations Specialist
RS	range safety
S&A	safe and arm
SAB	Sterilization and Assembly Building
SAEF 2	Spacecraft Assembly and Encapsulation Facility Number 2
SECO	second-stage engine cutoff
SLC	Space Launch Complex
S/C	spacecraft
SLS	Space Launch Squadron
S/M	Solid Motor
SMC	Space and Missile Center

SOB	squadron operations building
SOP	standard operating procedure
SR&QA	safety, reliability, and quality assurance
SRM	solid rocket motor
SS	Second Stage
STD	standard
STG	stage
STS	Space Transportation System
SW	Space Wing
TIM	technical interchange meeting
TM	telemetry
TMR	telemetry control rack
TMS	telemtry system
TWX	telex
Typ	typical
UDS	Universal Document System
UMB	umbilical
USAF	United States Air Force
UV	ultraviolet
VAB	Vertical Assembly Building
VAC	volts alternating current
VAFB	Vandenberg Air Force Base
VC	visible cleanliness
VCA	vehicle checkout area
VCF	vehicle checkout facility
VCR1	vehicle control rack 1
VCR2	vehicle control rack 2
VDC	volts direct current
VEH	vehicle
VIM	Vehicle Information Memorandum
VLD	voice direct line
VM	video monitor
VOS	vehicle on stand
W/D	Walkdown
W/O	without
WR	Western Range

INTRODUCTION

This Planners Guide is provided by the McDonnell Douglas Corporation (MDC) to familiarize potential customers with the Delta II launch services. The guide describes the Delta II, its background and heritage, and its performance capabilities. Spacecraft interface constraints and the environments that the spacecraft will experience during launch are defined. Facilities, operations, and operational constraints are described, as well as the documentation, integration, and procedural requirements that are associated with preparing for and conducting a launch.

The Delta II is the newest, most powerful version of the highly regarded Delta series of launch vehicles originally developed by the National Aeronautics and Space Administration (NASA). In over three decades of use, Delta has achieved an average of one launch every 60 days. The long life and many successes of the Delta launch vehicle stem from its evolutionary design, which can be upgraded to meet the needs of the user community while maintaining the highest reliability of any Western launch vehicle.

The Delta provides flexibility by maintaining launch pads at both the eastern and western ranges. Two launch pads at Cape Canaveral Air Station (CCAS) in Florida have been in service longer than the pads used by any other launch system and have been regularly upgraded to meet the increasingly rigorous spacecraft support requirements of our customers. The pads are open to both commercial and government customers without restriction. Maintenance, mission modifications, and launch preparations may be conducted at one pad without impacting operations at the other. This arrangement allows MDC to provide schedule and launch-period flexibility and to minimize schedule risk. Having an additional pad at Vandenberg Air Force

DAC123862 H31195

Delta II early morning final launch preparations—Eastern Range

Delta II launch—liftoff at Eastern Range

Base (VAFB) in California provides mission flexibility. The Delta II is launched from one of the dedicated pads at Space Launch Complex (SLC) 17 at CCAS, for missions requiring low- and medium-inclination orbits; and from SLC-2, a dedicated Delta launch pad at VAFB, for high-inclination orbits.

Our demonstrated high launch rate is made possible by streamlined procedures, experienced personnel, and excellent working relationships with all Range regulatory and safety agencies. The Delta launch team is one of the most experienced in the world. It has a reputation for responding quickly to mission-specific requirements including providing services for the highly specialized payloads of NASA, USAF, and commercial agencies. MDC approaches each mission by fully involving its customers in the integration and launch preparations process. This team approach is aimed at producing quality results and mission success.

As a commercial launch service provider, MDC acts as the sole agent for the user in interfacing with the United States Air Force (USAF), National Aeronautics and Space Administration (NASA), Department of Transportation (DOT), and Astrotech Space Operations Company, as well as any other agency necessary when other commercial or government facilities are engaged for spacecraft processing. A commercialization agreement with the USAF and NASA provides MDC use of the launch facilities and services in support of Delta II commercial vehicles.

Specific Delta II personnel will be assigned to the user's program at McDonnell Douglas Aerospace (MDA) in Huntington Beach, California. In the early, precontractual stages, a marketing manager will coordinate matters related to launch capability, spacecraft interfaces, integration, and other engineering issues, as well as contractual terms and conditions. At the appropriate time, a mission manager will be assigned from the Delta Program Office to coordinate all matters related to the integration of the spacecraft with the Delta II launch vehicle and facilities; interface with government or other agencies; and documentation, planning, and scheduling requirements.

The Delta team addresses each customer's concerns and requirements individually, employing a

DAC123861 H31202

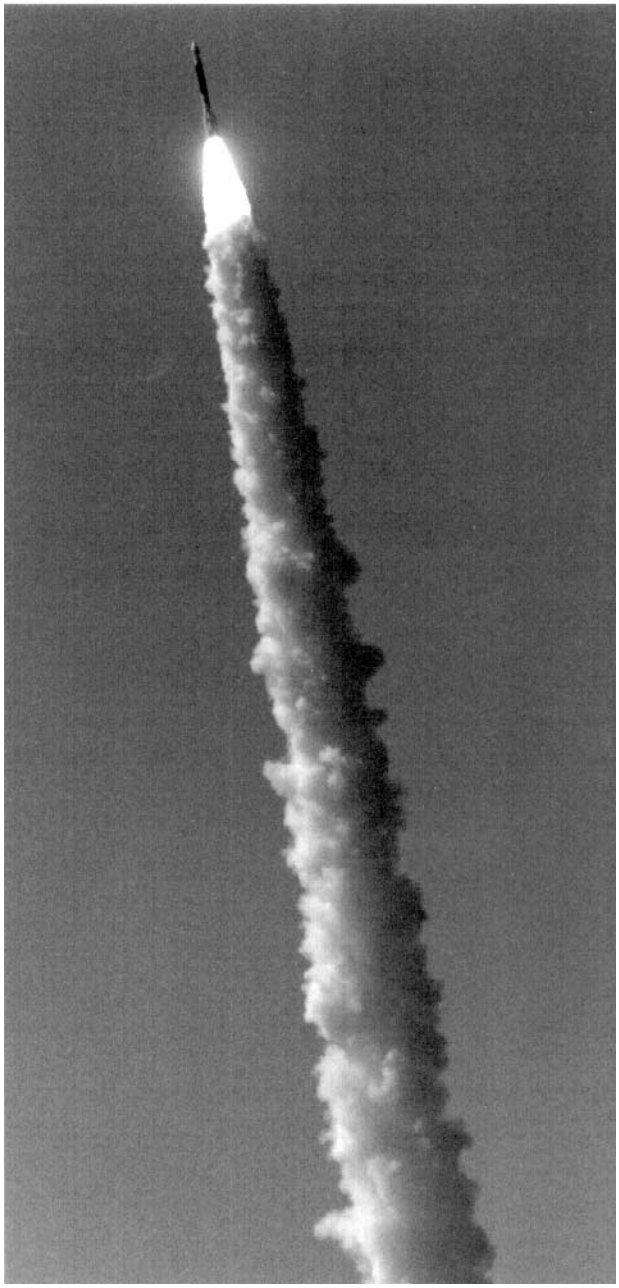

Delta II contrail—seconds after liftoff

meticulous, systematic, user-specific process that covers advance mission planning and analysis of spacecraft design; coordination of systems interface between spacecraft and Delta II; processing of all necessary documentation, including government requirements; prelaunch systems integration and checkout; launch site operations dedicated exclusively to the user's schedule and needs; and postflight analysis.

The Delta team works closely with its customers to define optimum performance for the mission payload(s). In many cases we can provide innovative performance trades to augment the performance shown in Section 2. Our Delta team also has extensive experience in supporting customers around the globe. This demonstrated capability to utilize the flexibility of the Delta vehicle and design team, together with our experience in supporting worldwide customers, makes Delta the ideal choice as a launch service provider.

Delta II operations from coast to coast provide proven efficiency in production, integration, and launch services. More than 80% of the Delta II fabrication and subassembly occurs in Huntington Beach, California. The final assembly takes place in Pueblo, Colorado, and vehicle checkout is conducted at either CCAS or VAFB.

The Delta II offers a dedicated launch service, the benefit of a launch team committed to the users' payload, and a mission profile and launch window designed specifically for a single payload. This dedicated manifest results in better cost control and greater overall efficiency, plus the advantages of a simplified integration process, on-time launch assurance, and straightforward flight operations and control. Coupled with this are the McDonnell Douglas commitment to excellence and proven dependability, which have given our customers the highest assurance of a successful launch campaign for more than three decades.

DAC61666 H31193

Eastern Range Launch Complex 17

Section 1
LAUNCH VEHICLE DESCRIPTIONS

This section provides an overall description of the Delta II launch vehicle and its major components. In addition, the Delta vehicle designations are explained.

1.1 DELTA LAUNCH VEHICLES

The Delta launch vehicle program was initiated in the late 1950s by the National Aeronautics and Space Administration (NASA) with McDonnell Douglas as the prime contractor. McDonnell Douglas developed an interim space launch vehicle using a modified Thor as the first stage and Vanguard components as the second and third stages. The vehicle was capable of delivering a payload of 54 kg (120 lb) to geosynchronous transfer orbit (GTO). The McDonnell Douglas commitment to vehicle improvement to meet customer needs led to the Delta II vehicle, which now provides a capability of over 1869 kg (4120 lb) to GTO (Figure 1-1).

The Delta has compiled an impressive record of successful launches for more than three decades. During this period it has demonstrated exceptional reliability in the launching of satellites for communication and navigation, meteorology, science, and Earth observation for government and commercial users worldwide. The launch history presented in the Appendix (Delta Missions Chronology) summarizes the Delta tradition of success. It can be seen that in the 18 years prior to the publication of this document, the Delta has had a launch success rate of over 98%. This record is the best of any launch system currently available and is a strong argument for choosing the Delta II as the launcher for your mission.

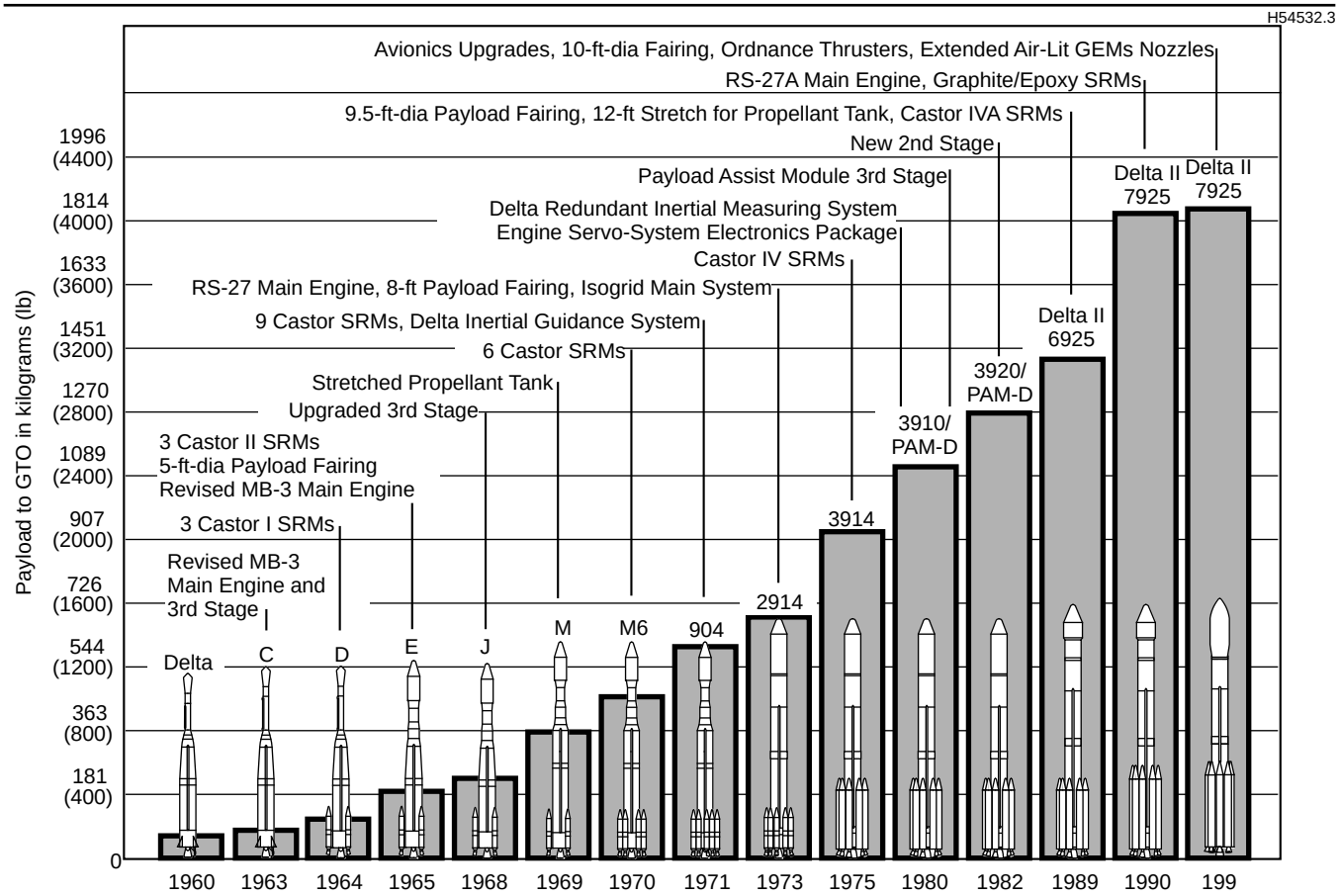

Figure 1-1. Delta/Delta II Growth To Meet Customer Needs

The Delta II offers both two- and three-stage vehicles; a choice of 2.9- and 3-m (9.5- and 10-ft) diameter fairings; and three, four, or nine solid motor configurations to meet the needs of our customers (Figure 1-2).

The four-digit system used to identify Delta configurations is explained in Table 1-1.

1.2 LAUNCH VEHICLE DESCRIPTION

The major elements of the Delta II launch vehicle are the first stage and its thrust augmentation solid motors, the second stage, the third stage and spin table, and the payload fairing (PLF). The Delta 7925 has a nominal overall length of 38.2 m (125.2 ft) and a diameter of 2.4 m (8 ft) for the core vehicle. The vehicle is an integrated system with a proven heritage of reliability, operability, and producibility.

The current 7000 series booster configuration uses an RS-27A engine with a 12:1 expansion ratio and the Alliant lightweight, GEM solid rocket strap-ons. The booster is available with either nine (792X designation), four (742X designation), or three (732X designation) GEM strap-ons. The three-stage 7925 and the two-stage 7920-10 vehicles shown in Figures 1-3 and 1-4, respectively, are representative of the series. Delta II characteristics are summarized in Tables 1-2 and 1-3.

1.2.1 First Stage

The first-stage subassemblies include the interstage, fuel tank, centerbody, liquid oxygen (LO_2) tank, and engine section.

The Rocketdyne RS-27A main engine has a 12:1 expansion ratio and employs a turbine/turbopump and a regeneratively cooled thrust chamber and nozzle. The thrust chamber and nozzle are hydraulically gimbaled to provide pitch and yaw control. Two Rocketdyne vernier engines provide roll con-

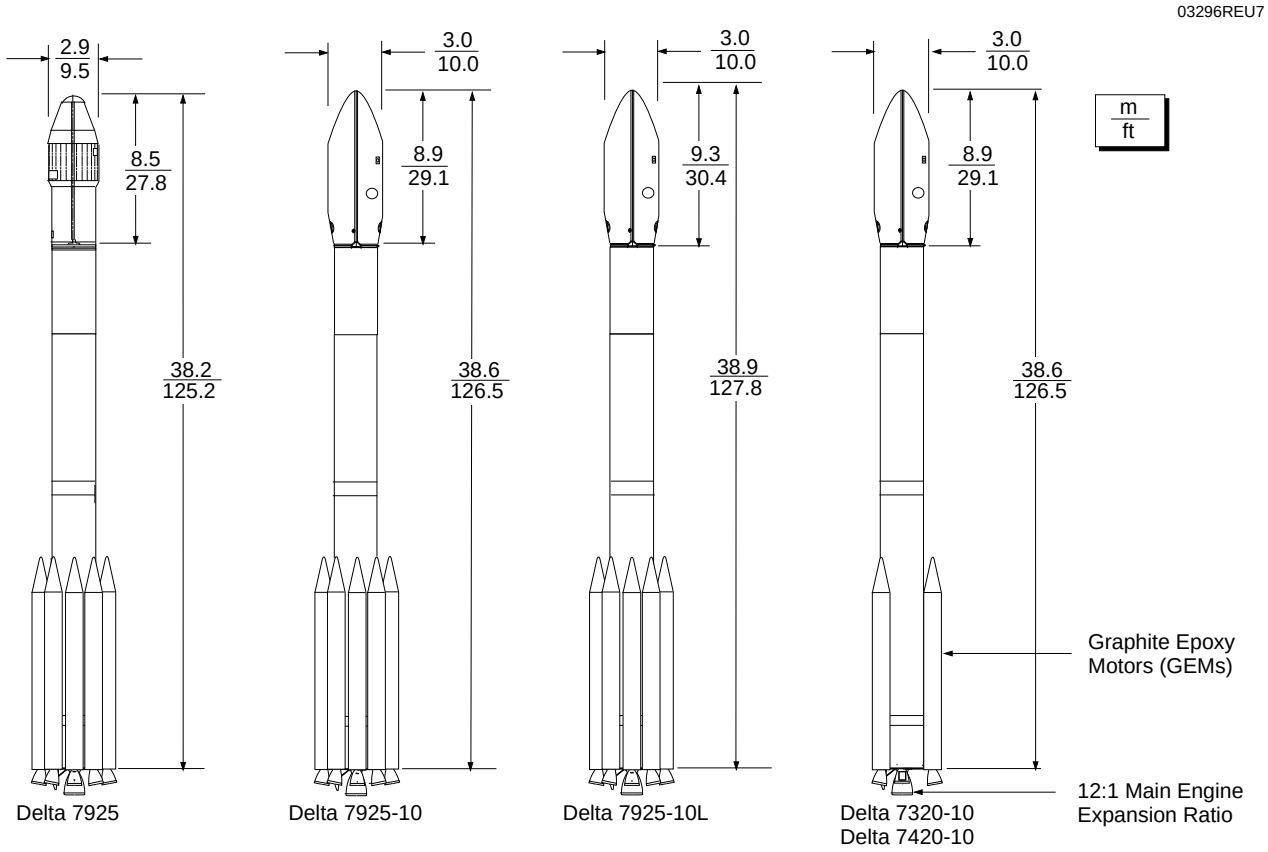

Figure 1-2. Delta II Configurations

Table 1-1. Delta Four-Digit Designation

Digit	Indicates	Examples
1st	Type of first-stage engine and solid rocket motors	7 – GEM solid motor augmentation; extra-long extended tank; modified RS-27A engine; 12:1 nozzle ratio
2nd	Number of solid rocket motors	9 – Nine solid rocket motors 3 – Three solid rocket motors 4 – Four solid rocket motors
3rd	Type of second stage	2 – Aerojet AJ10-118K engine
4th	Type of third stage	0 – No third stage 5 – STAR 48B third stage (4,430 lb propellant maximum)
Dash no.	Type of fairing	None – Standard 9.5-ft-diameter, 27.8-ft-long fairing -10 – 10-ft diameter, 29.1-ft-long-fairing -10L – 10-ft diameter, 30.4-ft long fairing (under development)

Example: Delta 7925-10

Digit	Indicates
7	GEM solid motor augmentation; extra-long extended tank; modified RS-27A engine; 12:1 nozzle ratio
9	Nine solid rocket motors
2	Aerojet AJ10-118K engine
5	STAR 48B third stage (4,430 lb propellant maximum)
-10	10-ft diameter, 29.1-ft-long fairing

trol during main-engine burn and attitude control between main-engine cutoff (MECO) and second-stage separation.

The standard vehicle configuration includes nine Alliant graphite-epoxy motors (GEMs) to augment the first-stage performance. Six of these motors are ignited at liftoff, and the remaining three motors have extended nozzles and are ignited in flight after burnout of the first six. Ordnance for the motor ignition and separation systems is completely redundant. The 732X and 742X vehicles include either three or four GEMs, all of which are ignited at liftoff.

The LO_2 tank, fuel tank, and interstage are constructed of aluminum isogrid shells and aluminum tank domes. The centerbody between the fuel and LO_2 tanks houses the first-stage electronic components on hinged panels for easy checkout access and enhanced maintainability.

The interstage, located between the first stage and second-stage miniskirt, carries the loads from the second stage and fairing to the first stage. The interstage houses the second stage and contains range safety antennas, an exhaust vent for the fairing cavity, and six guided spring actuators to separate the second stage from the first stage.

1.2.2 Second Stage

The second stage is powered by the proven Aerojet AJ10-118K engine and includes fuel and oxidizer tanks that are separated by a common bulkhead. The simple, reliable start and restart operation requires only the actuation of a bipropellant valve to release the pressure-fed hypergolic propellants with no need for a turbopump or an ignition system. Typical Delta two- and three-stage missions utilize two second-stage starts, but the restart capability has been used as many as six times on a single mission. During powered flight, the second-stage hydraulic system gimbals the engine for pitch and yaw control. A redundant attitude control system (RACS) using nitrogen gas provides roll control. The RACS also provides pitch, yaw,and roll control during unpowered flight. The guidance system is installed in the forward section of the second stage.

1.2.3 Third Stage

The third stage consists of a STAR 48B solid rocket motor (SRM), a payload attach fitting (PAF) with a nutation control system (NCS), and a spin table containing small rockets for spin-up of the third stage and spacecraft. This stack mates to the top of the Delta second stage.

The flight-proven STAR 48B SRM is produced by the Thiokol Corporation. The motor was devel-

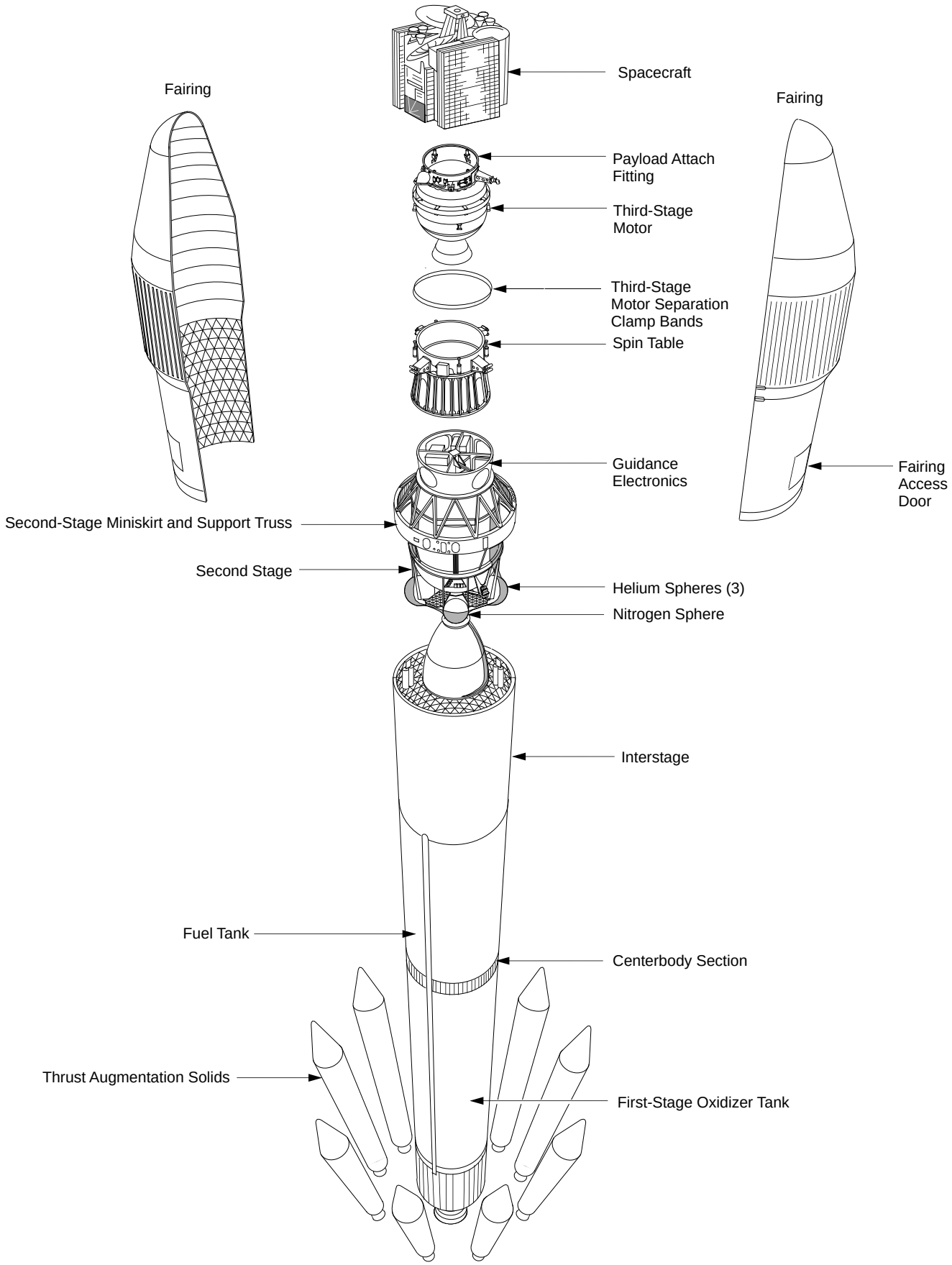

Figure 1-3. Delta 7925 Launch Vehicle

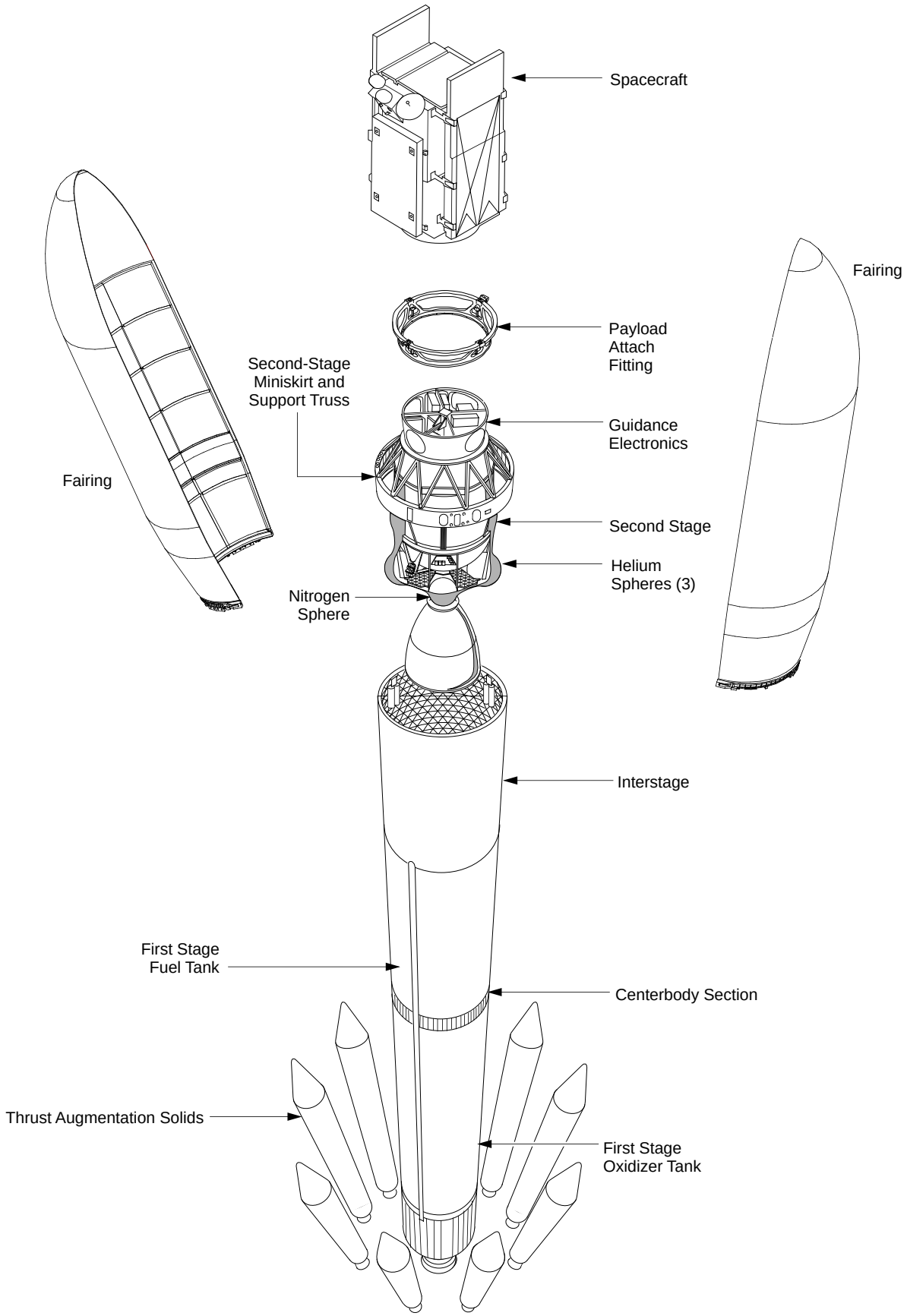

Figure 1-4. Delta 7920-10 Launch Vehicle

Table 1-2. Delta II Vehicle Description

	Vehicle Configuration	
■ Ascent environment	**7320**	**7925**
● Liftoff mass	151,740 kg (334,525 lb)[1]	231,870 kg (511,190 lb)[2]
● Liftoff thrust	1,970 kN (443,250 lb)	3,110 kN (699,250 lb)
● Maximum dynamic pressure	62,720 N/m^2 (1310 psf)	62,720 N/m^2 (1310 psf)
● Maximum steady-state acceleration[3]	6.65 g	6.25 g

1. Based on spacecraft mass of 2868 kg (6324 lb)
2. Based on spacecraft mass of 1869 kg (4120 lb)
3. Occurs at MECO for both example vehicle configurations, three-sigma high value quoted

M029, T037, 12/8/95, 02:14 PM

oped from a family of high-performance apogee and perigee kick motors made by Thiokol.

Our flight-proven NCS maintains orientation of the spin-axis of the SRM/spacecraft during third-stage flight until just prior to spacecraft separation. The NCS uses monopropellant hydrazine that is prepressurized with helium. This simple system has inherent reliability with only one functioning component and leak-free design.

An ordnance sequence system is used to release the third stage after spin-up, to fire the STAR-48B motor, and to separate the spacecraft following motor burn.

1.2.4 Payload Attach Fittings

The spacecraft mates to the Delta using an MDA-provided payload attach fitting (PAF). A variety of PAFs are available for two- and three-stage missions to meet payload needs. The spacecraft separation systems are incorporated into the launch vehicle PAF and include clampband separation systems or attach bolt systems as required. The PAFs and separation systems are discussed in greater detail in Section 5.

Table 1-3. Delta II Vehicle Characteristics

	Strap-on solids	First stage	Second stage	Third stage
Length (m/ft)	13.0/42.5	26.1/85.6	6.0/19.6	2.0/6.7
Diameter (m/ft)	1.0/3.3	2.4/8	2.4/8	1.2/4.1
Total weight (kg/lb)	13,082/28,840 (GL)* 13,204/29,110 (AL)**	101,796/224,420	6,954/15,331	2,217/4,887
Engine/motor	GEM	RS-27A	AJ10-118K	STAR-48B
Manufacturer	Alliant	Rocketdyne	Aerojet	Thiokol
Quantity	9, 3, or 4	1	1	1 or 0
Propellants	Solid	LO_2/RP-1	N_2O_4/A-50	Solid
Propellant weight (kg/lb)	11,765/25,937 each	96,118/211,902	6,004/13,236	2,009/4,430
Thrust (N/lb)† – SL	446,023/100,270 each	889,644/200,000	—	—
– VAC	499,180/112,220 each (GL)* 516,216/116,050 each (AL)**	1,085,811/244,088	43,657/9,815	66,367/14,920
Isp (sec)† – SL	245.4	254.2	—	—
– VAC	274.0 (GL)* 283.4 (AL)**	301.7	319.2	292.2
Burn time (sec)	63.3	260.5	431.6	87.1
Propellant temperature (°C/°F)	22.8/73	28.9/84	15.6/60	15.6/60
Expansion ratio	10	12	65	54.8

*Ground lit

**Air lit (extended nozzle)

†Average during the burn

1.2.5 Payload Fairings

The Delta launch vehicle offers the user a 2.9-m (9.5-ft) diameter skin-and-stringer center section fairing (bisector) as well as a 3-m (10-ft) diameter (bisector) composite version. Each of these fairings (Figure 1-5) can be used on either two-stage or three-stage missions. The 2.9-m fairing has been flight proven over many years, whereas the 3-m composite fairing is the new fleet replacement for the standard 3-m aluminum fairing. A new 10L composite PLF is currently under development.
It is a 3-m (10-ft) diameter bisector composite fairing whose cylindrical length is .91 m (3 ft) longer than the baseline 3-m (10-ft) version and with a blunter nose.

The fairings incorporate interior acoustic absorption blankets as well as flight-proven contamination-free separation joints. McDonnell Douglas provides mission-specific modifications to the fairings as required by the customer. These include access doors, additional acoustic blankets, and RF windows. Fairings are discussed in greater detail in Section 3.

1.2.6 Guidance, Control, and Navigation System

In the fall of 1995, the Delta II launch vehicles incorporated the newly developed avionics upgrades to the Delta Inertial Guidance System (DIGS). The major element of the avionics upgrade is the Redundant Inertial Flight Control Assembly (RIFCA) with its integrated software design, which is a modernized, single-fault-tolerant guidance system. RIFCA utilizes six Allied Signal RL20 ring laser gyros and six Sundstrand model QA3000 accelerometers to provide redundant three-axis rate and acceleration data. In addition to RIFCA, both the first- and second-stage avionics include a power and control (P&C) box to support power distribution, an ordnance box to issue ordnance commands, an electronics package (E-pack) that interfaces with RIFCA through the P&C box to control the vehicle attitude, and a PCM telemetry system (T/M) that provides vehicle system performance data.

The RIFCA contains the basic control logic that processes rate and accelerometer data to form the proportional and discrete control output commands needed to drive the control actuators and cold gas jet control thrusters and sequences the remainder of the vehicle commands using on-board timing.

Position and velocity data are explicitly computed to derive guidance steering commands. Early in flight, a load relief mode turns the vehicle into the wind to reduce angle of attack, structural loads, and control effort. After dynamic pressure decay, the guidance system corrects trajectory dispersions caused by load relief and directs the vehicle to the nominal end-of-stage orbit. Space vehicle separation in the desired transfer orbit is accomplished by applying time adjustments to the nominal sequence.

1.3 VEHICLE AXES/ATTITUDE DEFINITIONS

The axes of the vehicle are defined in Figure 1-6. The vehicle centerline is the longitudinal axis of the vehicle. Axis II is on the downrange side of the vehicle and axis IV on the uprange side. The vehicle pitches about axes I and III. Positive pitch rotates the nose of the vehicle up, toward axis IV. The vehicle yaws about axes II and IV. Positive yaw rotates the nose of the vehicle to the right, toward axis I. The vehicle rolls about the centerline. Positive roll is clockwise rotation, looking forward (i.e., from axis I toward II). The third-stage spin table also spins in the same direction (i.e., the positive roll direction).

1.4 LAUNCH VEHICLE INSIGNIA

Delta II users may request a mission-specific insignia to be placed on their launch vehicles. The user is invited to submit the proposed design to the

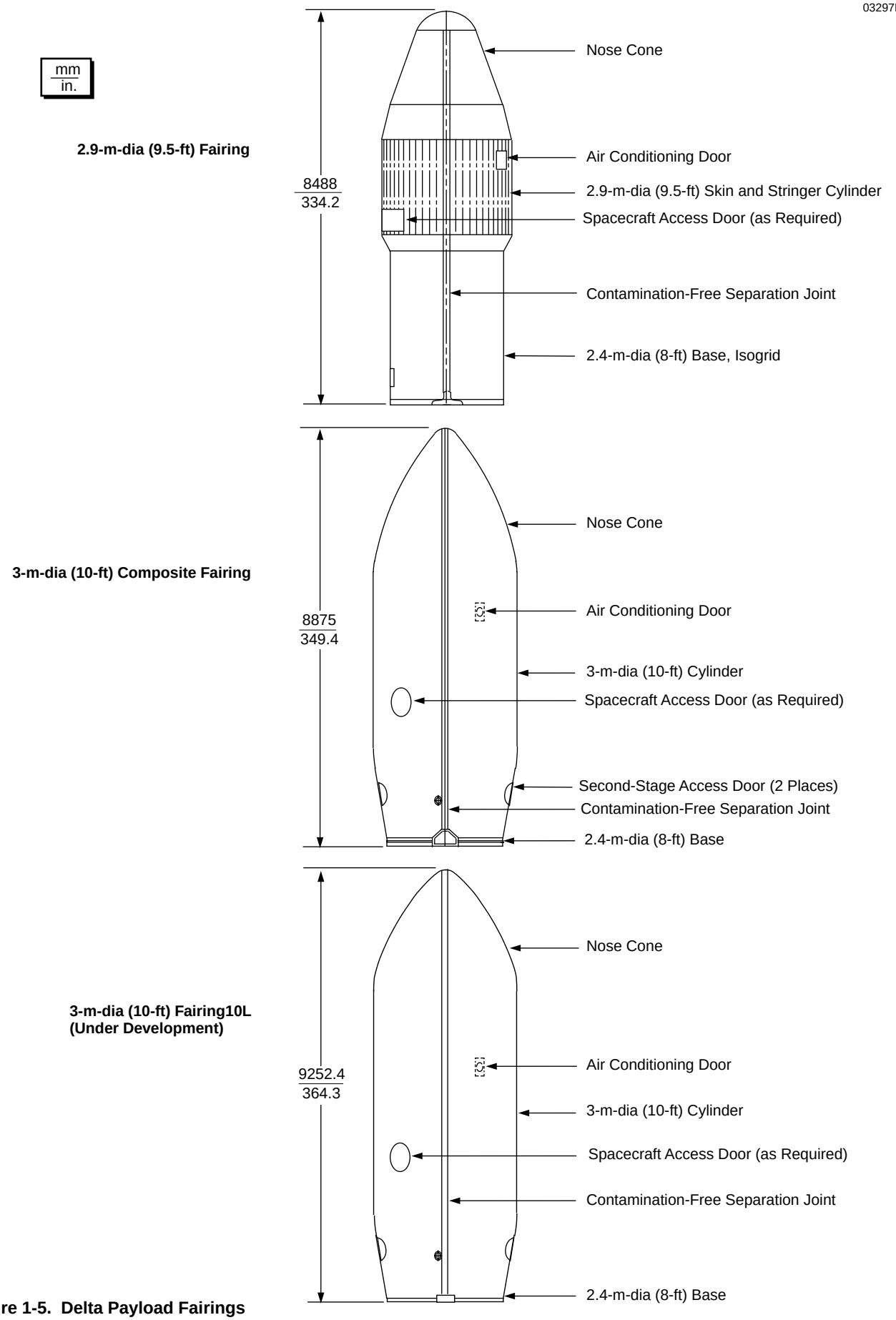

Figure 1-5. Delta Payload Fairings

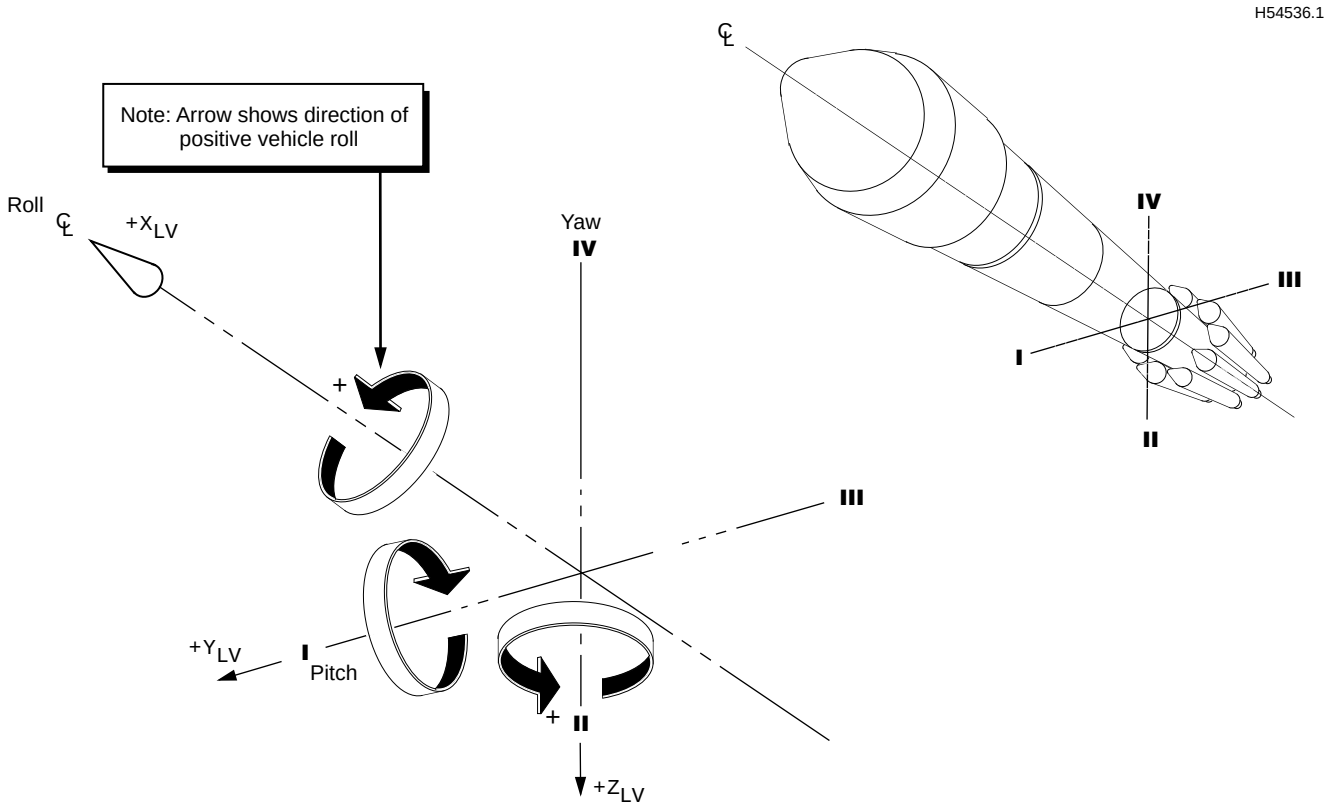

Figure 1-6. Vehicle Axes

Delta Program Office no later than 9 months prior to launch for review and approval. The maximum size of the insignia is 2.4 by 2.4 m (8 by 8 ft). Following approval, the Delta Program Office will have the flight insignia prepared and placed on the uprange side of the launch vehicle.

The Delta II can accommodate a wide range of spacecraft requirements. The following sections detail specific performance capabilities of several Delta launch vehicle configurations from the eastern and western ranges. In addition to the capabilities shown herein, our mission designers can provide innovative performance trades to meet the particular requirements of our payload customers.

2.1 LAUNCH SITES

Depending on the specific mission requirement and range safety restrictions, the Delta II 7300, 7400 or 7900 series vehicle can make use of either an east or west coast launch site.

■ **Eastern Launch Site.** The eastern launch site for Delta II is Space Launch Complex 17 (SLC-17) at the Cape Canaveral Air Station (CCAS). This site can accommodate flight azimuths in the range of 65 to 110 degrees, with 95 degrees being the most commonly flown.

■ **Western Launch Site.** The western launch site for Delta II is Space Launch Complex 2-West (SLC-2W) at the Vandenberg Air Force Base (VAFB). Flight azimuths in the range of 190 to 200 degrees are currently approved by the 30th Space Wing, with 196 degrees being the most commonly flown.

2.2 MISSION PROFILES

Profiles for both two- and three-stage missions are shown in Figures 2-1 and 2-2.

■ **7300 Series Vehicle.** In launches from both eastern and western sites, the first stage RS-27A engine and the three strap-on solid-rocket motors are ignited on the ground at liftoff. The solids are then jettisoned following burnout. The main engine continues to burn until main engine cutoff (MECO) at propellant depletion.

H54963.1

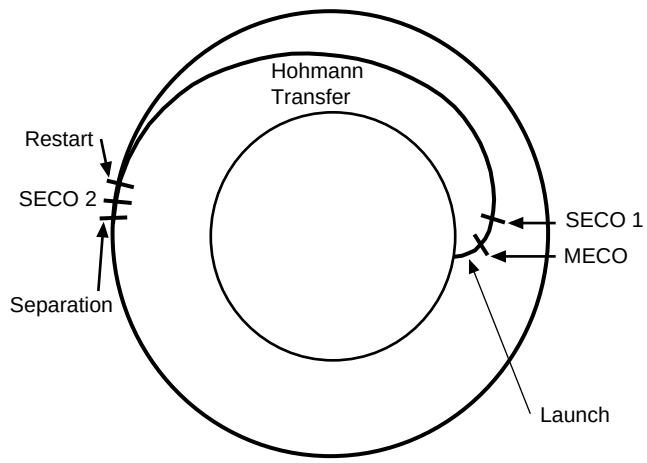

Figure 2-1. Typical Two-Stage Mission Profile

H54964

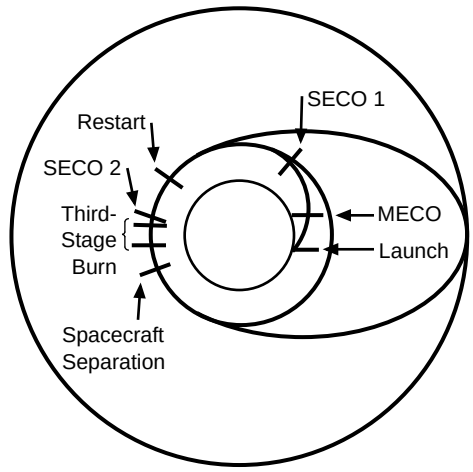

Figure 2-2. Typical Three-Stage Mission Profile

■ **7400 Series Vehicle.** MDA will begin flying the Delta II with four strap-on solid rocket motors (Delta 7420) from the eastern launch site in 1997. This configuration will be available to spacecraft contractors who require more performance than is achieved by the 7300 series vehicle: the performance capability of the 7400 series vehicle though not presented, is approximately 11% greater.

The 7400 series Delta II is available in both two- and three-stage configurations for launches from the eastern and western launch sites. The first-stage RS-27A engine and the four strap-on solid rocket motors are ignited on the ground at liftoff. The solids are jettisoned following burnout, in pairs at a one-second interval. The remaining vehicle sequence of events is approximately the same as with the 7300 series vehicle.

■ **7900 Series Vehicle.** In launches from both eastern and western sites, the first-stage RS-27A main engine and six of the nine strap-on solid-rocket motors are ignited on the ground at liftoff. Following burnout of the six solids, the remaining three GEMs having extended nozzles are ignited. The six spent cases are then jettisoned in sets of three after vehicle and range safety constraints have been met. Jettisoning of the second set occurs one second after the first. The remaining three solids are jettisoned about three seconds after they burn out. The main engine then continues to burn until MECO.

The remainder of the two- and three-stage mission profiles for the 7300 series and 7900 series vehicles are almost identical. Following a short coast period, separation of the first and second stages occurs and, approximately five seconds later, the second stage ignites. The next major event is the payload fairing (PLF) separation, which occurs early in the second-stage flight after an acceptable free-molecular heating rate has been reached.

In the typical two-stage mission (Figure 2-1), the second stage burns for approximately 340 to 420 seconds, at which time second-stage engine cutoff (SECO 1) occurs. The vehicle then follows a Hohmann transfer trajectory to the desired low Earth orbit (LEO) altitude. Near apogee of the transfer orbit, the second stage is reignited and completes its burn to circularize the orbit. Spacecraft separation takes place approximately 250 seconds after second-stage engine cutoff command (SECO 2).

The three-stage mission, typically a mission to a Geosynchronous Transfer Orbit (GTO) (Figure 2-2), uses the first burn of the second stage to place the spacecraft into a 185-km (100-nmi) parking orbit inclined at 28.7 degrees. The vehicle then coasts to a position near the equator where the second stage is restarted and burned until second cutoff. The third stage is spun-up, separated, and burned to establish the GTO. Depending on mission requirements and spacecraft mass, some inclination can be removed via the burn sequence out of the Earth parking orbit.

After payload separation, the Delta second stage is restarted to deplete any remaining propellants (depletion burn) and/or to move the stage to a safe distance from the spacecraft (evasive burn).

If required, the multiple restart capability of the Delta second stage allows the use of an ascending-node flight profile to meet mission requirements.

Typical sequences for LEO missions for the 7320 vehicle from the eastern and western ranges are shown in Figures 2-3 and 2-4, while sequences for a GTO mission using the 7925 vehicle and a polar mission using the 7920 vehicle are shown in Figures 2-5 and 2-6. Typical event times for both two-and three-stage versions of the 7300 series and 7900 series configurations from the eastern and western ranges are presented in Tables 2-1 and 2-2.

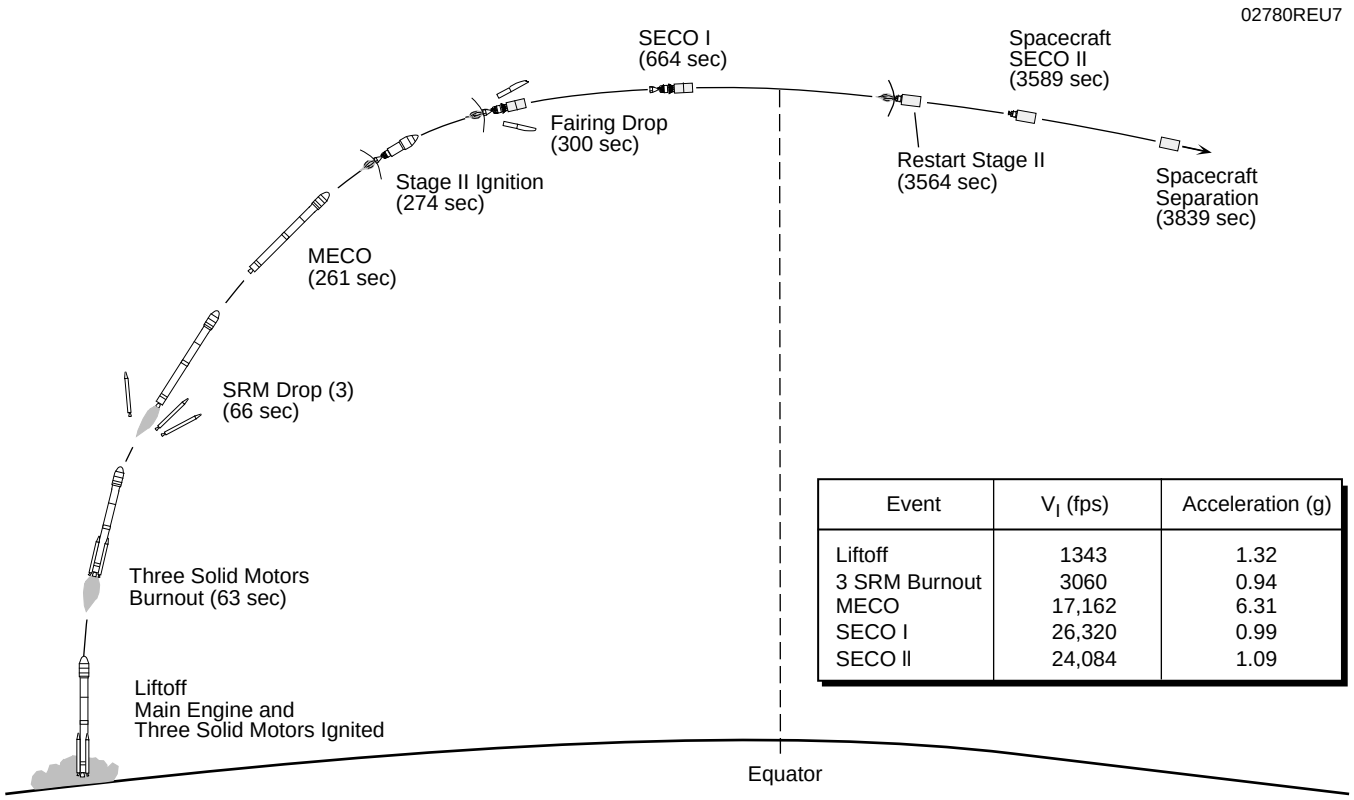

Event	V_I (fps)	Acceleration (g)
Liftoff	1343	1.32
3 SRM Burnout	3060	0.94
MECO	17,162	6.31
SECO I	26,320	0.99
SECO II	24,084	1.09

Eastern Range launch site, flight azimuth 95 deg; maximum capability to 28.7-deg inclined orbit, 550-nmi circular

Figure 2-3. Typical Delta II 7320 Mission Profile—Circular Orbit Mission (Eastern Range) (Download Figure)

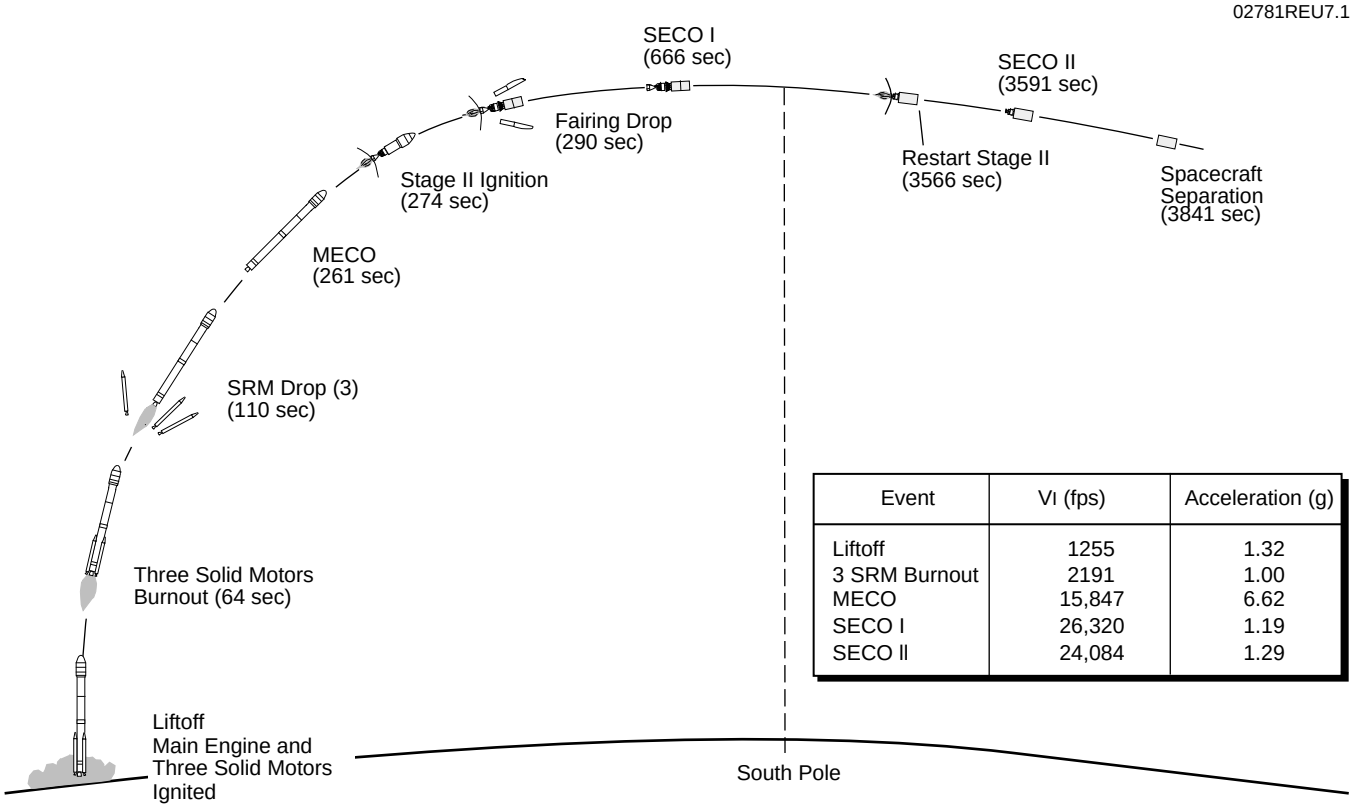

Event	V_I (fps)	Acceleration (g)
Liftoff	1255	1.32
3 SRM Burnout	2191	1.00
MECO	15,847	6.62
SECO I	26,320	1.19
SECO II	24,084	1.29

Western Range launch site, flight azimuth 196 deg; maximum capability to polar orbit, 550-nmi circular

Figure 2-4. Typical Delta II 7320 Mission Profile—Polar Orbit Mission (Western Range) (Download Figure)

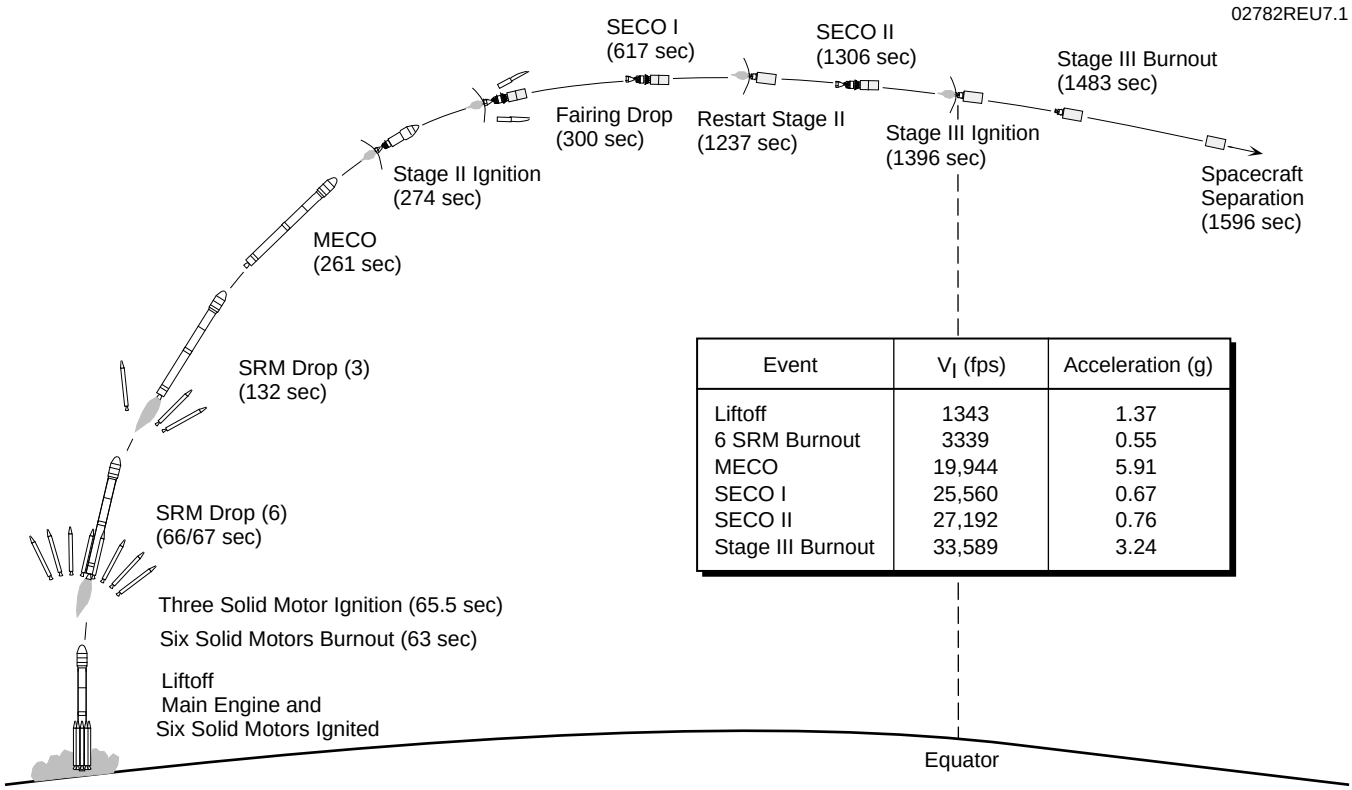

Event	V_I (fps)	Acceleration (g)
Liftoff	1343	1.37
6 SRM Burnout	3339	0.55
MECO	19,944	5.91
SECO I	25,560	0.67
SECO II	27,192	0.76
Stage III Burnout	33,589	3.24

Eastern Range launch site, flight azimuth 95 deg; maximum capability to 28.7-deg inclined GTO, 100-nmi perigee

Figure 2-5. Typical Delta II 7925 Mission Profile—GTO Mission (Eastern Range) (Download Figure)

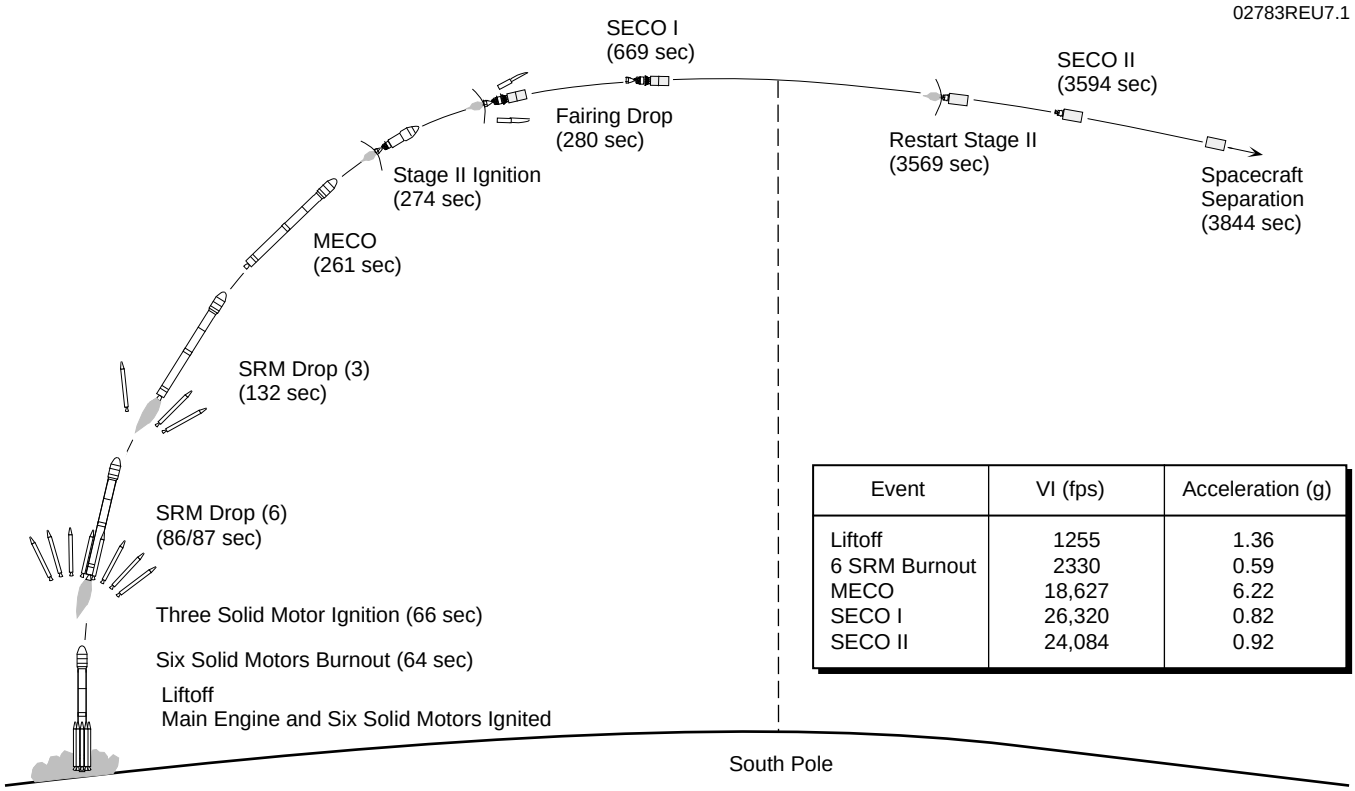

Event	VI (fps)	Acceleration (g)
Liftoff	1255	1.36
6 SRM Burnout	2330	0.59
MECO	18,627	6.22
SECO I	26,320	0.82
SECO II	24,084	0.92

Western Range launch site, flight azimuth 196 deg; maximum capability to polar orbit, 550-nmi circular

Figure 2-6. Typical Delta II 7920 Mission Profile—Polar Mission (Western Range) (Download Figure)

Table 2-1. Delta II Typical Eastern Range Event Times

Event	7320	7325	7920	7925
First Stage				
Main engine ignition	T + 0 sec	T + 0	T + 0	T + 0
Solid motor ignition (6 solids)			T + 0	T + 0
Solid motor burnout (6 solids)			T + 63	T + 63
Solid motor ignition (3 solids)	T + 0	T + 0	T + 66	T + 66
Solid motor separation (3/3 solids)			T + 66/67	T + 66/67
Solid motor burnout (3 solids)	T + 63	T + 63	T + 129	T + 129
Solid motor separation (3 solids)	T + 66	T + 66	T + 132	T + 132
MECO (M)	T + 261	T + 261	T + 261	T + 261
Second Stage				
Activate stage I/II separation bolts	M + 8	M + 8	M + 8	M + 8
Stage II ignition	M + 13.5	M + 13.5	M + 13.5	M + 13.5
Fairing separation	M + 39	M + 39	M + 39	M + 39
SECO (S1)	M + 390	M + 415	M + 408	M + 356
Stage II engine restart	S1 + 2900	S1 + 610	S1 + 2900	S1 + 620
SECO (S2)	S1 + 2925	S1 + 631	S1 + 2925	S1 + 689
Third Stage				
Activate spin rockets, start Stage III sequencer		S2 + 50		S2 + 50
Separate Stage II		S2 + 53		S2 + 53
Stage III ignition		S2 + 90		S2 + 90
Stage III burnout		S2 + 177		S2 + 177
Spacecraft				
Spacecraft separation in a 550-nmi circular orbit	S2 + 250		S2 + 250	
All times shown in seconds.				

M029,T003, 5/13/96 , 9:44 AM

Table 2-2. Delta II Typical Western Range Event Times

Event	7320	7920	7925
First Stage			
Main engine ignition	T + 0 sec	T + 0	T + 0
Solid motor ignition (6 solids)		T + 0	T + 0
Solid motor burnout (6 solids)		T + 64	T + 64
Solid motor ignition (3 solids)	T + 0	T + 66	T + 66
Solid motor separation (3/3 solids)		T + 86/87	T + 86/87
Solid motor burnout (3 solids)	T + 64	T + 130	T + 130
Solid motor separation (3 solids)	T + 110	T + 132	T + 132
MECO (M)	T + 261	T + 261	T + 261
Second Stage			
Activate stage I/II separation bolts	M + 8	M + 8	M + 8
Stage II ignition	M + 13.5	M + 13.5	M + 13.5
Fairing separtion	M + 29	M + 19	M + 19
SECO (S1)	M + 392	M + 408	M + 356
Stage II engine restart	S1 + 2900	S1 + 2900	S1 + 620
SECO (S2)	S1 + 2925	S1 + 2925	S1 + 689
Third Stage			
Activate spin rockets, start stage III sequencer			S2 + 50
Separate stage II			S2 + 53
Stage III ignition			S2 + 90
Stage III burnout			S2 + 177
Spacecraft			
Spacecraft separation in a 550-nmi circular orbit	S2 + 250	S2 + 250	
All times shown in seconds.			

M029, T004, 5/13/96, 9:44 AM

2.3 PERFORMANCE CAPABILITY

This section presents a summary of the performance capabilities of both the two- and three-stage vehicles, 7300 and 7900 series, from the eastern (CCAS) and western (VAFB) launch sites.

The performance estimates shown in Figures 2-7 through 2-28 that follow are computed based on the following assumptions:

A. Nominal propulsion system and weight models including avionics upgrades were used on all stages.

B. The first stage is burned to propellant depletion.

C. Extended nozzle airlit GEMs are incorporated (only airlit GEMs have extended nozzles).

D. Second-stage propellant reserve is sufficient to provide a 99.7% probability of a command shutdown (PCS) by the guidance system.

E. PLF separation occurs at a time when the free molecular heating rate range is equal to or less than 1135 W/m^2 (0.1 Btu/ft^2 sec).

F. Perigee velocity is the vehicle burnout velocity at 185 km (100 nmi) altitude and zero degree flight path angle.

G. Initial flight azimuth is 95 degrees from the eastern launch site, and 196 degrees from the western launch site.

H. A 6019 payload attach fitting (PAF) is assumed for 7300 series two-stage missions, and a 6915 PAF is assumed for 7900 series two-stage missions, while a 3712 A, B or C PAF is assumed for both 7300 series and 7900 series three-stage missions. It should be noted that two-stage PAFs other than those assumed can be used on the 7320 and 7920 configurations. This will affect the spacecraft weight capability shown in the plots that follow.

I. Capabilities are shown for the standard 2.9-m (9.5-ft), and 3-m (10-ft) PLFs.

A summary of maximum performance for common missions is presented in Table 2-3.

Performance data are presented in the following pages for both two- and three-stage vehicles of the 7300 and 7900 series launched from the eastern and western ranges. Spacecraft weight capability is presented as a function of the parameters listed below.

7300 SERIES VEHICLE.

■ **Eastern Launch Site.**

- Two-stage perigee velocity (Figure 2-7).
- Two-stage apogee altitude (Figure 2-8).
- Two-stage circular orbit altitude (Figure 2-9).
- Three-stage perigee velocity (Figure 2-10).
- Three-stage planetary mission launch energy (Figure 2-11).

Table 2-3. Mission Capabilities

	Spacecraft Weight (kg/lb)			
	7325	**7325-10**	**7925**	**7925-10**
Three-stage missions				
■ Geosynchronous Transfer Orbit (GTO) ● CCAS, i = 28.7 deg ● 185 x 35,786 km/100 x 19,323 nmi	*	*	1869/ 4120	1798/ 3965
■ Molniya orbit ● VAFB, i = 63.4 deg ● 370 x 40,094 km/200 x 21,649 nmi	N/A	N/A	1220/ 2690	1170/ 2580
	7320	**7320-10**	**7920**	**7920-10**
Two-stage missions				
■ Low Earth orbit (LEO) ● CCAS, i = 28.7 deg ● 185 km/100 nmi circular	2867/ 6320	2735/ 6030	5139/ 11,330	4971/ 10,960
■ LEO ● VAFB, i = 90 deg ● 185 km/100 nmi circular	2096/ 4620	1982 / 4370	3896/ 8590	3774/ 8320
■ Sun-synchronous orbit ● VAFB, i = 98.7 deg ● 833 km/450 nmi circular	1687/ 3720	1578 3480	3220/ 7100	3112/ 6860

*Requires an impacting second-stage flight mode. Direct inquiries to the Delta Program Office

■ **Western Launch Site.**

- Two-stage perigee velocity (Figure 2-12).
- Two-stage apogee altitude (Figure 2-13).
- Two-stage circular orbit altitude (Figure 2-14).
- Two-stage sun-synchronous orbit (Figure 2-15).

7900 Series Vehicle.

■ **Eastern Launch Site.**

– Two-stage perigee velocity (Figure 2-16).
– Two-stage apogee altitude (Figure 2-17).
– Two-stage circular orbit altitude (Figure 2-18).
– Three-stage perigee velocity (Figure 2-19).
– Three-stage apogee altitude (Figure 2-20).
– Three-stage GTO inclination (Figure 2-21).
– Three-stage planetary mission (Figure 2-22).

■ **Western Launch Site.**

– Two-stage perigee velocity (Figure 2-23).
– Two-stage apogee altitude (Figure 2-24).
– Two-stage circular orbit altitude (Figure 2-25).
– Two-stage sun-synchronous orbit (Figure 2-26).
– Three-stage perigee velocity (Figure 2-27).
– Three-stage apogee altitude (Figure 2-28).

The performance capability for any given mission depends upon quantitative analysis of all known mission requirements and range safety restrictions. The allowable spacecraft weight should be coordinated with the Delta Program Office as early as possible in the basic mission planning. Preliminary error analysis, performance optimization, and trade-off studies will be performed, as required, to arrive at an early commitment of allowable spacecraft weight for each specific mission.

2.4 MISSION ACCURACY DATA

All Delta II configurations employ the RIFCA mounted in the second-stage guidance compartment. This system provides precise pointing and orbit accuracy for both two- and three-stage missions.

The typical two-stage mission to low-altitude circular orbit uses a Hohmann transfer between second stage burns in which the second stage is restarted to circularize the orbit after a coast period. In these cases the three-sigma dispersion accuracy achieved by the guidance system is typically less than the following:

■ Circular orbit altitude: ±9.3 km (± 5 nmi).
■ Orbit inclination: ± 0.05 degrees.

In a three-stage mission, the parking-orbit parameters achieved are quite accurate. The final orbit (e.g., GTO) is primarily affected by the third stage pointing and the impulse errors from the third stage solid motor burn. The pointing error for a given mission depends on the third-stage/spacecraft mass properties and the spin rate. The typical pointing error at third stage ignition is approximately 1.5 degrees based on past Delta experience. Apogee altitude variations for the GTO mission that result from this error are shown in Figure 2-29. The transfer orbit inclination error is typically from ±0.2 to ±0.6 degrees over the range shown, while the perigee altitude variation is typically about ±5.6 km (±3 nmi). All errors are three-sigma values.

These data are presented as general indicators only. Individual mission requirements and specifications will be used to perform detailed analyses for specific missions. The user is invited to contact the Delta Program Office for further information.

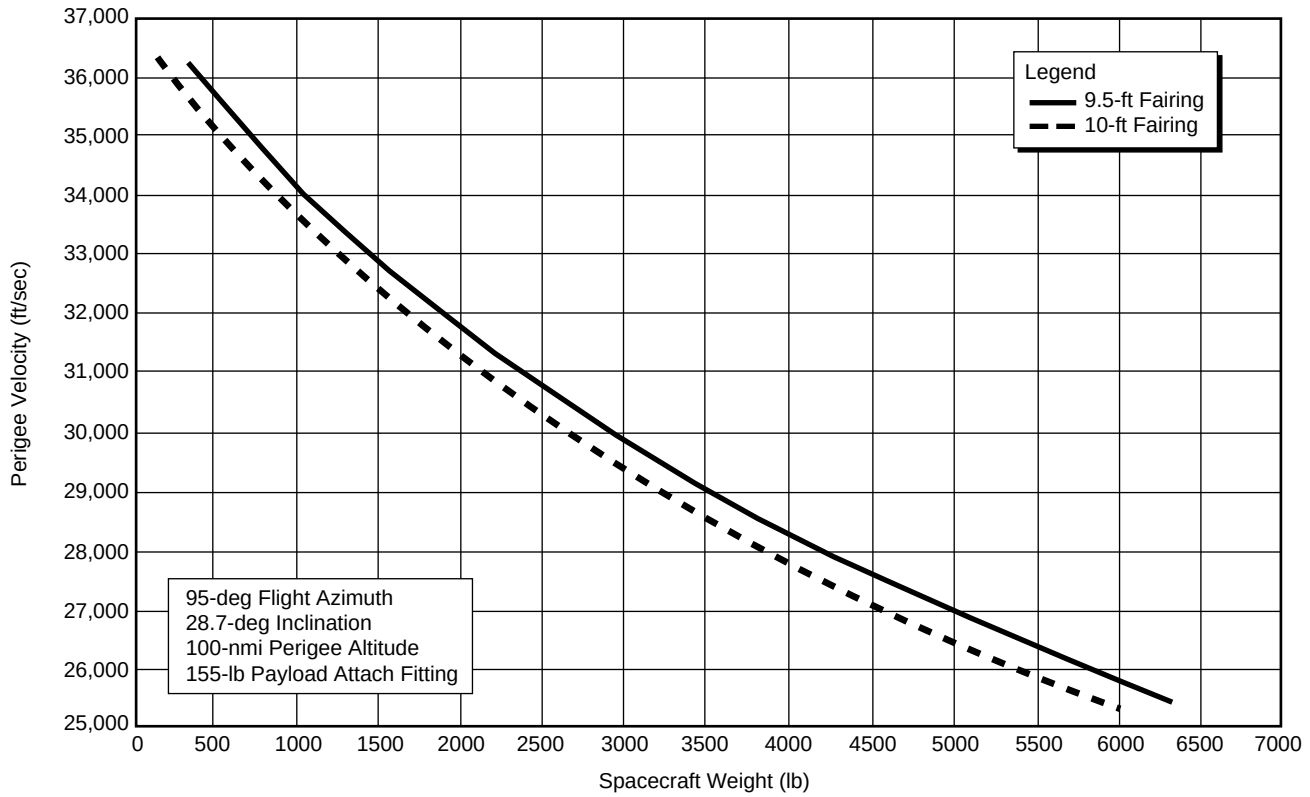

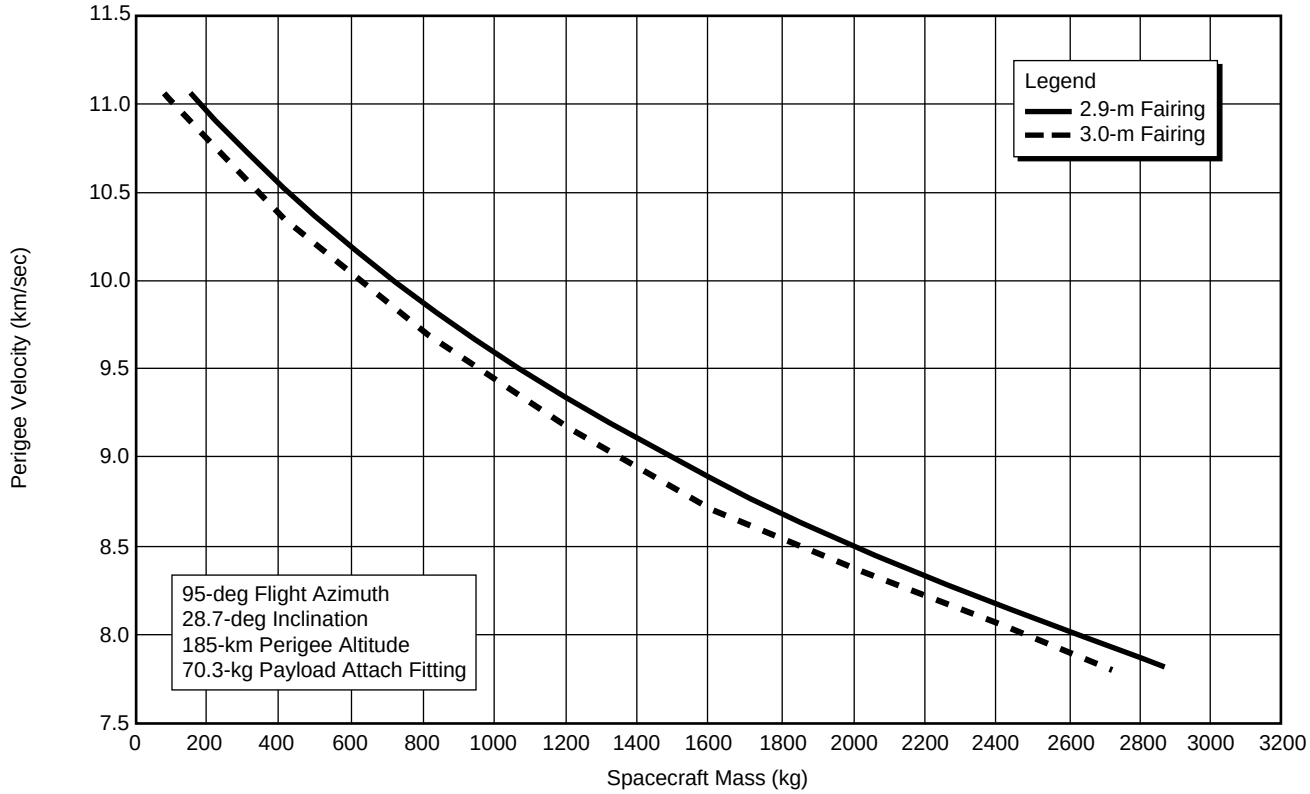

Figure 2-7. Delta II 7320 Vehicle, Two-Stage Perigee Velocity Capability, Eastern Range (Download Figure)

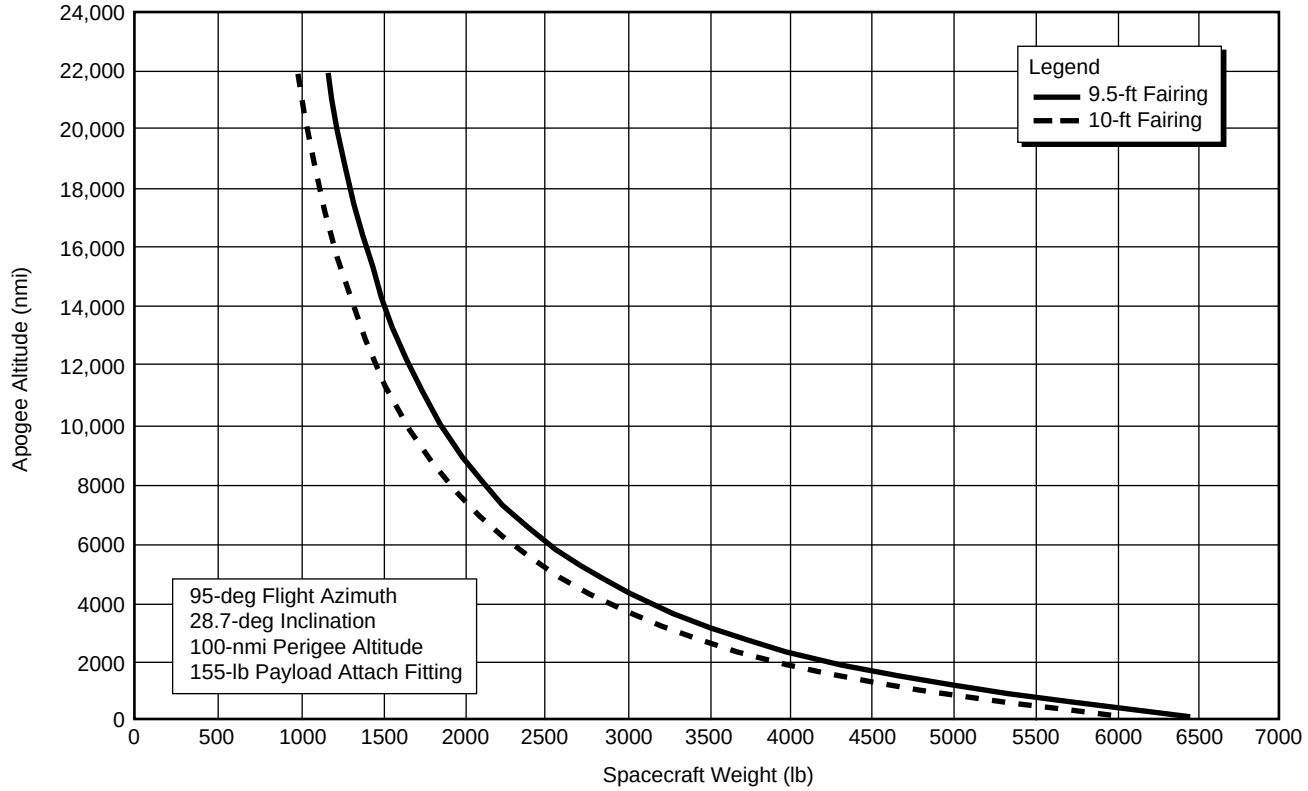

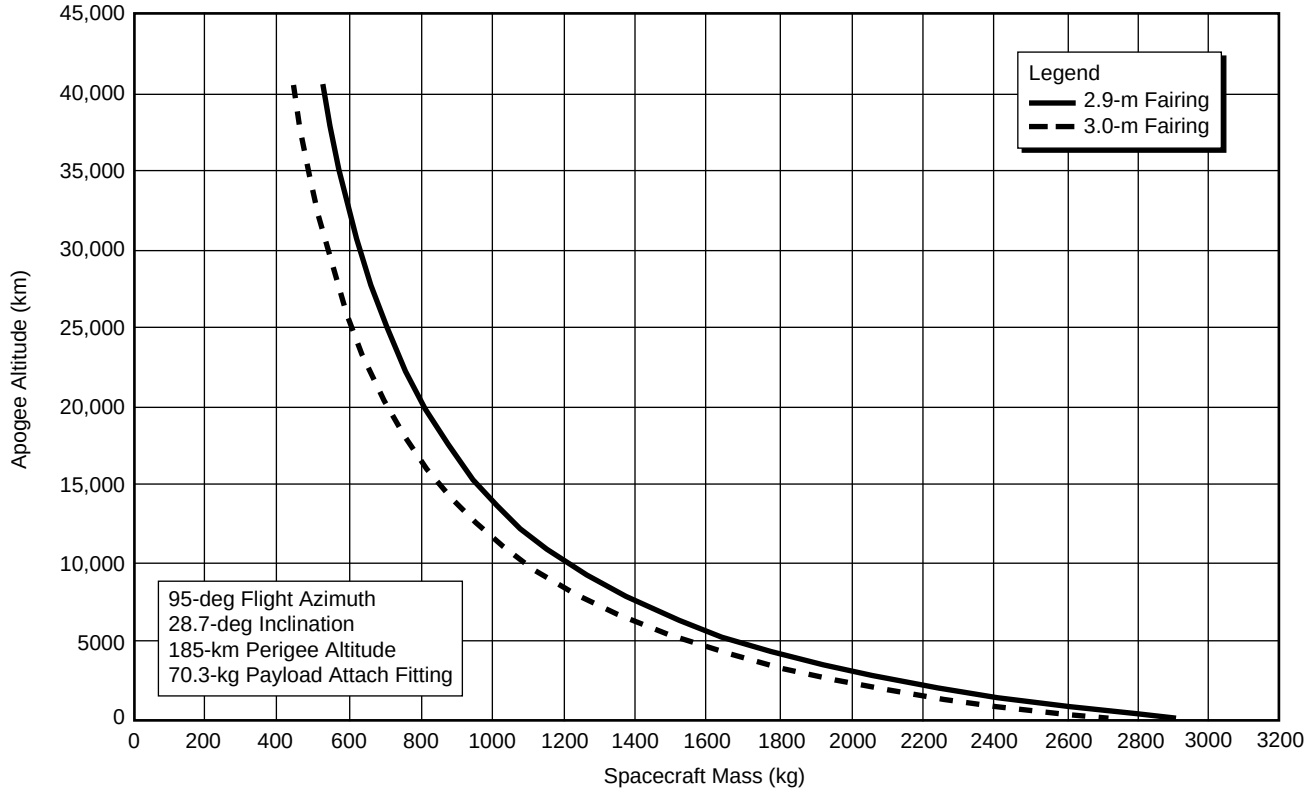

Figure 2-8. Delta II 7320 Vehicle, Two-Stage Apogee Altitude Capability, Eastern Range (Download Figure)

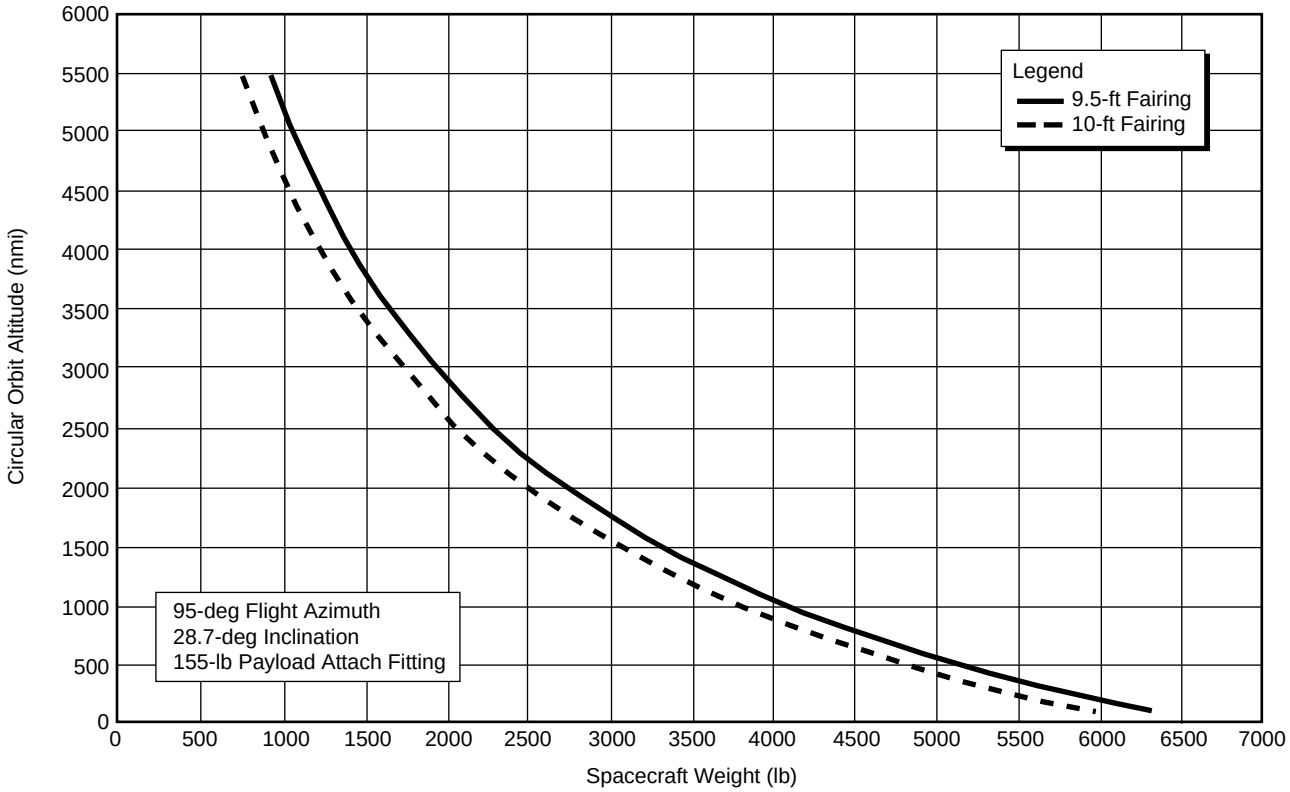

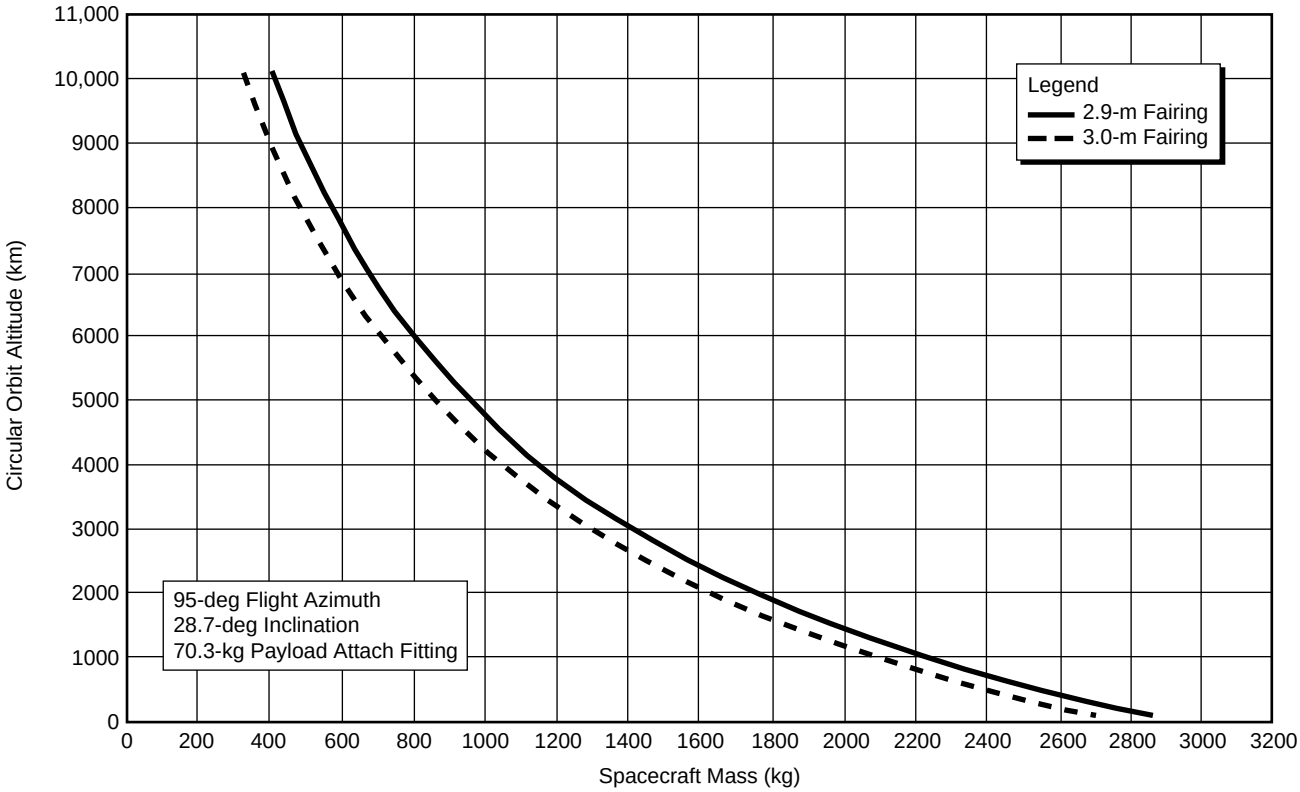

Figure 2-9. Delta II 7320 Vehicle, Two-Stage Circular Orbit Capability, Eastern Range (Download Figure)

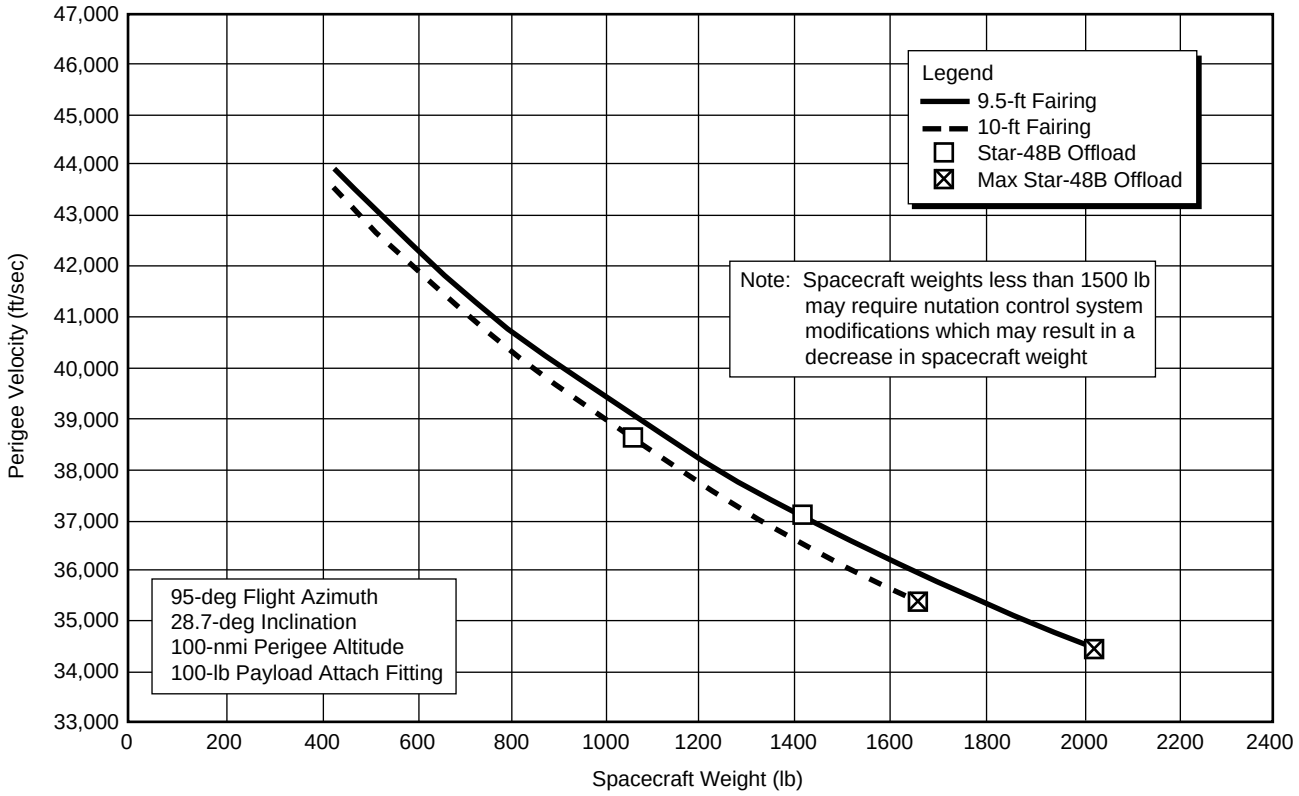

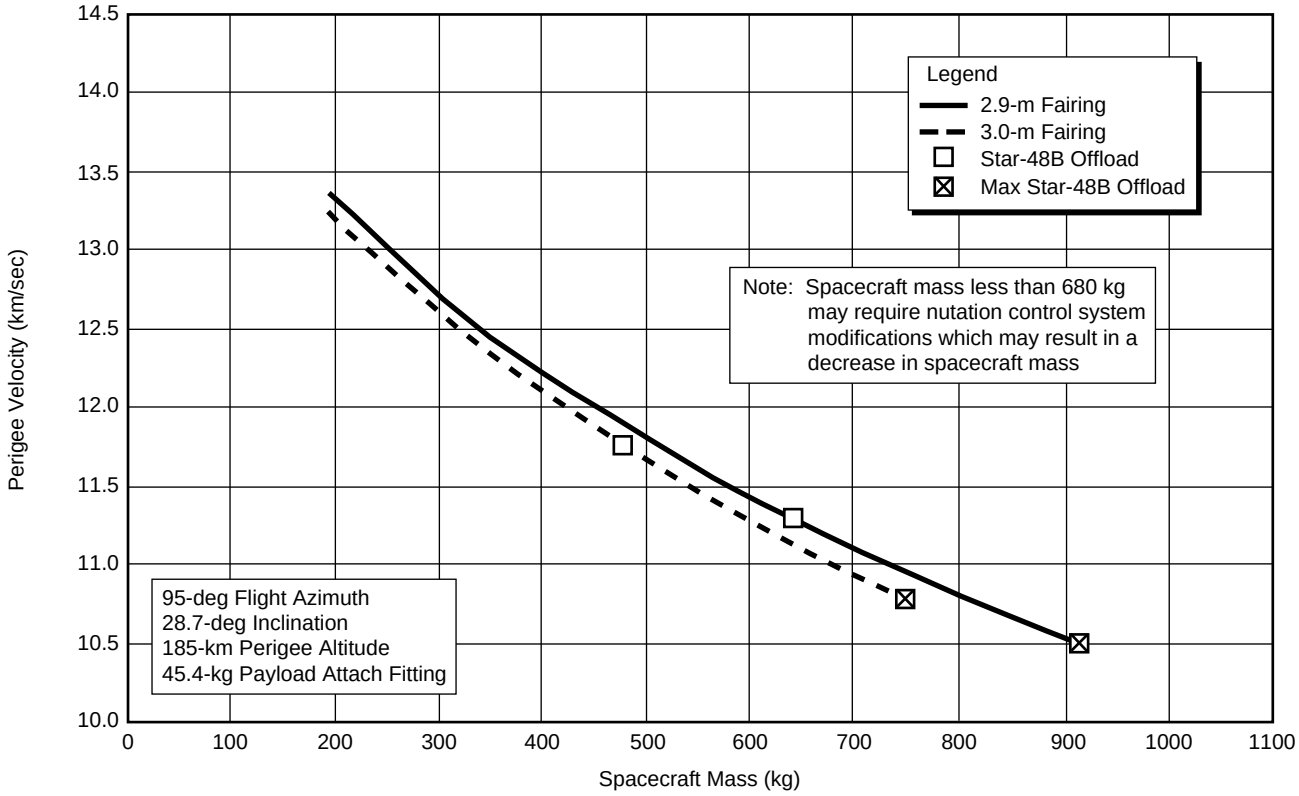

Figure 2-10. Delta II 7325 Vehicle, Three-Stage Perigee Velocity Capability, Eastern Range (Download Figure)

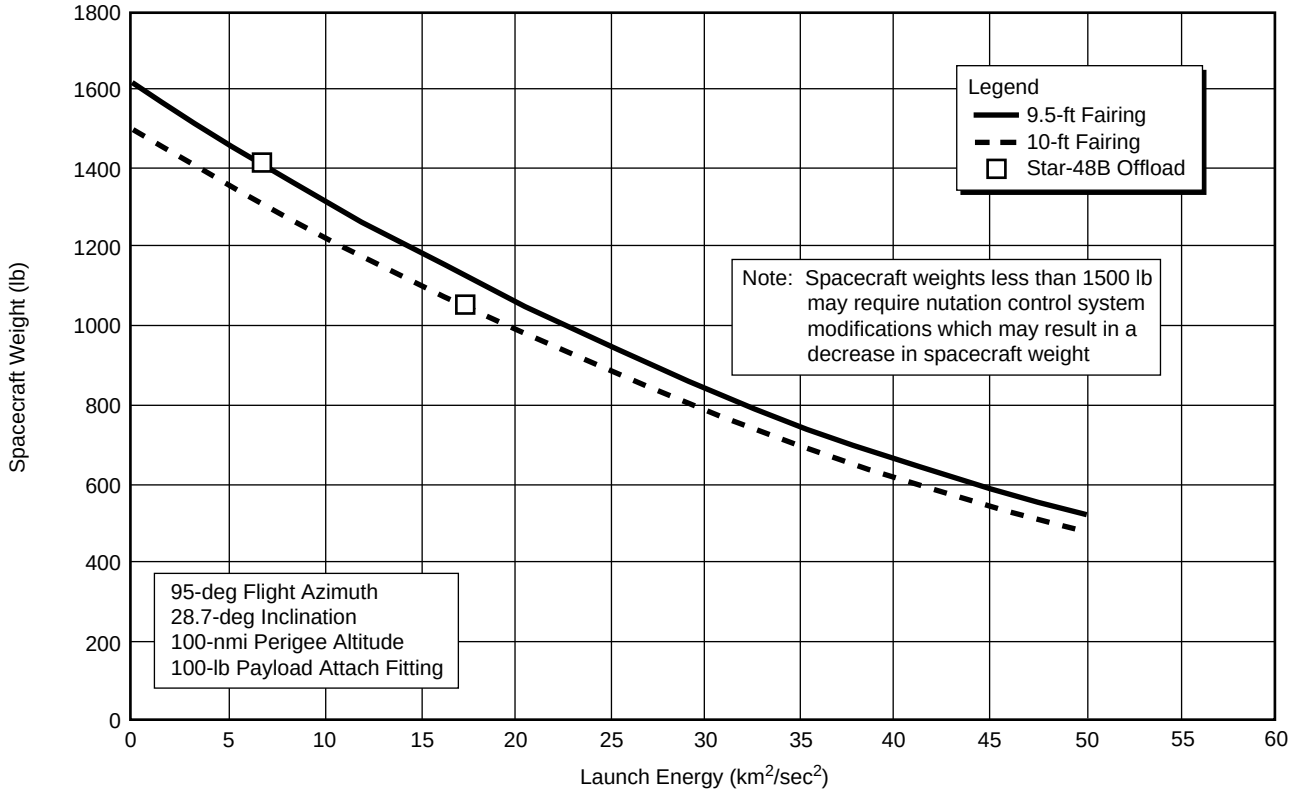

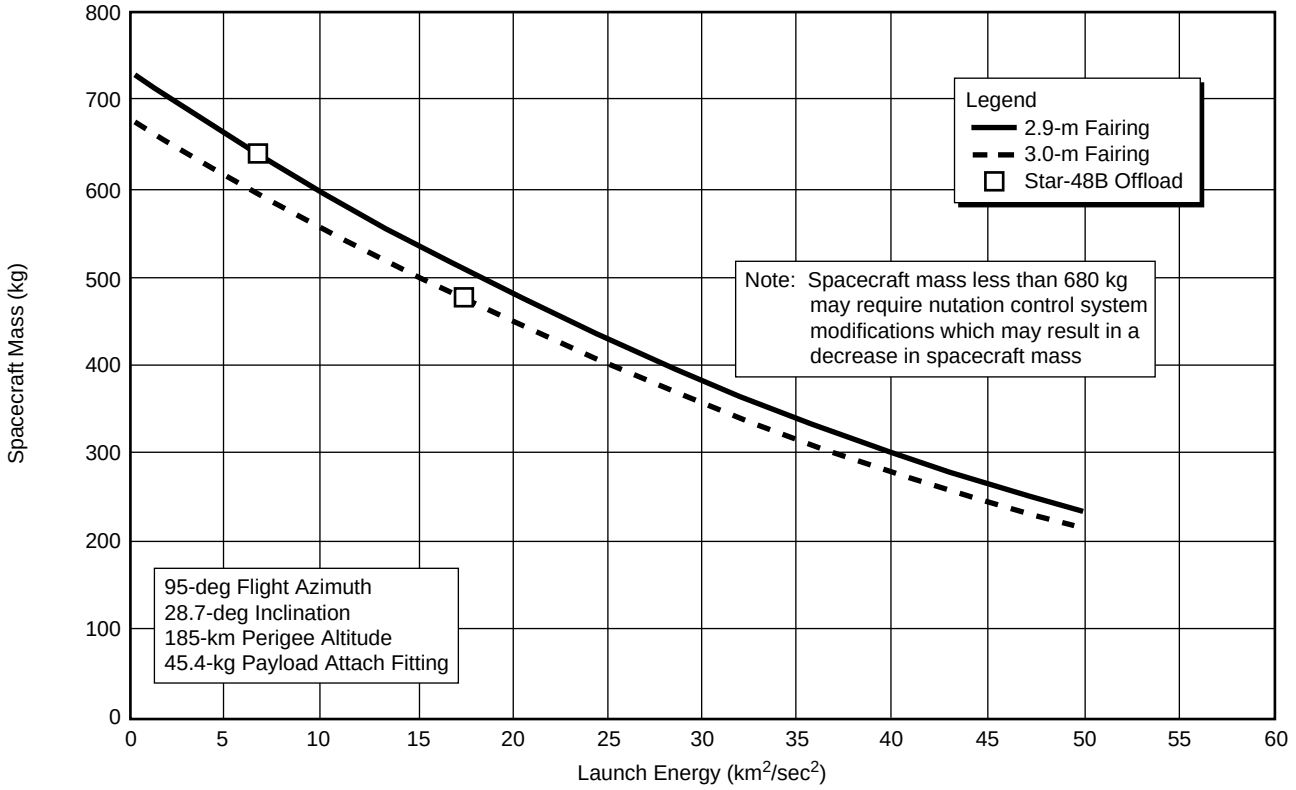

Figure 2-11. Delta II 7325 Vehicle, Three-Stage Planetary Mission Capability, Eastern Range (Download Figure)

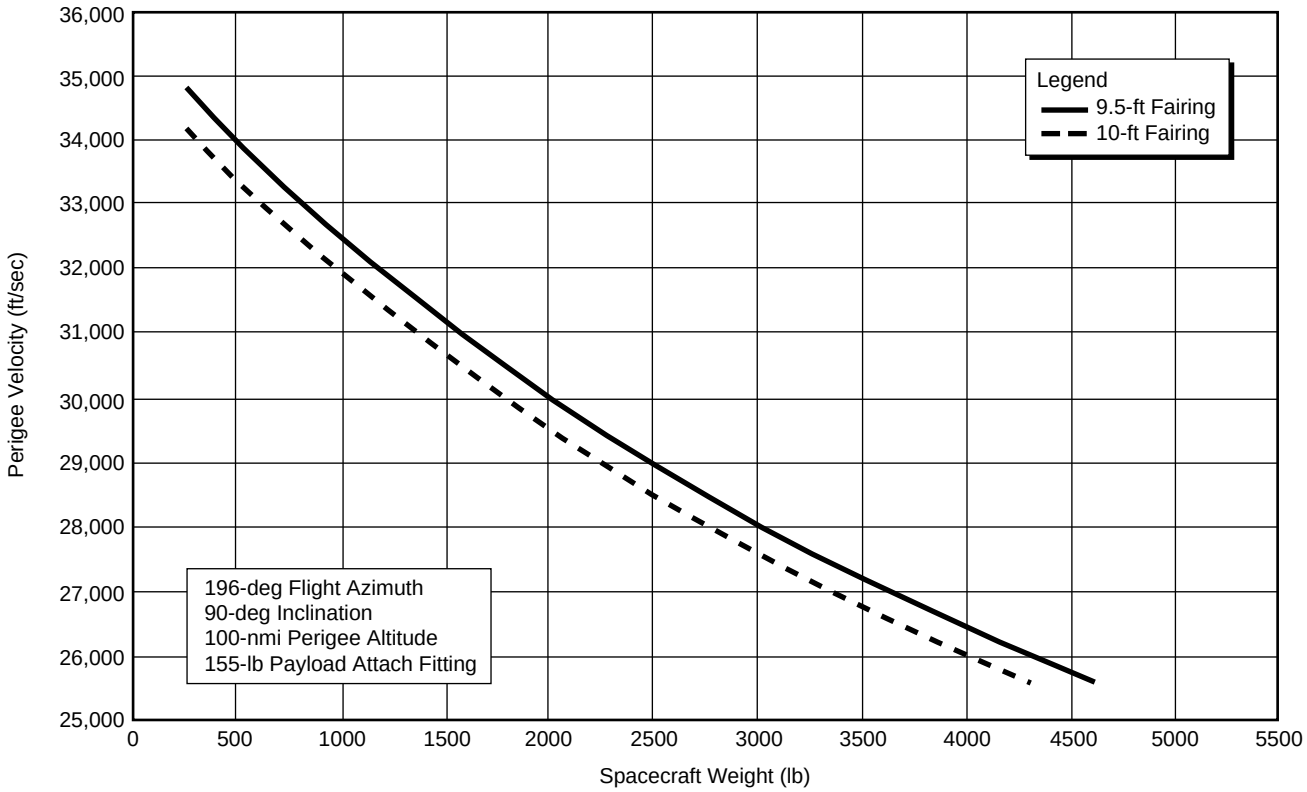

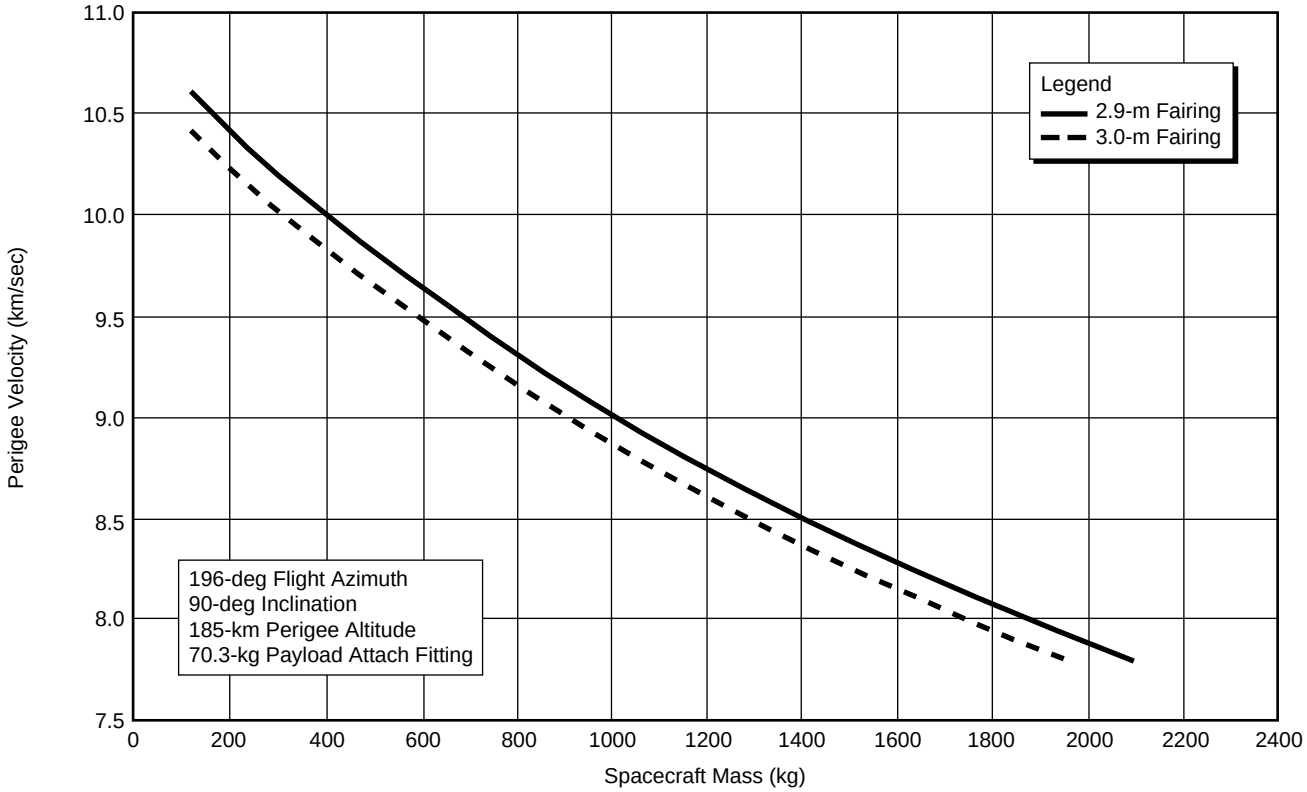

Figure 2-12. Delta II 7320 Vehicle, Two-Stage Perigee Velocity Capability, Western Range (Download Figure)

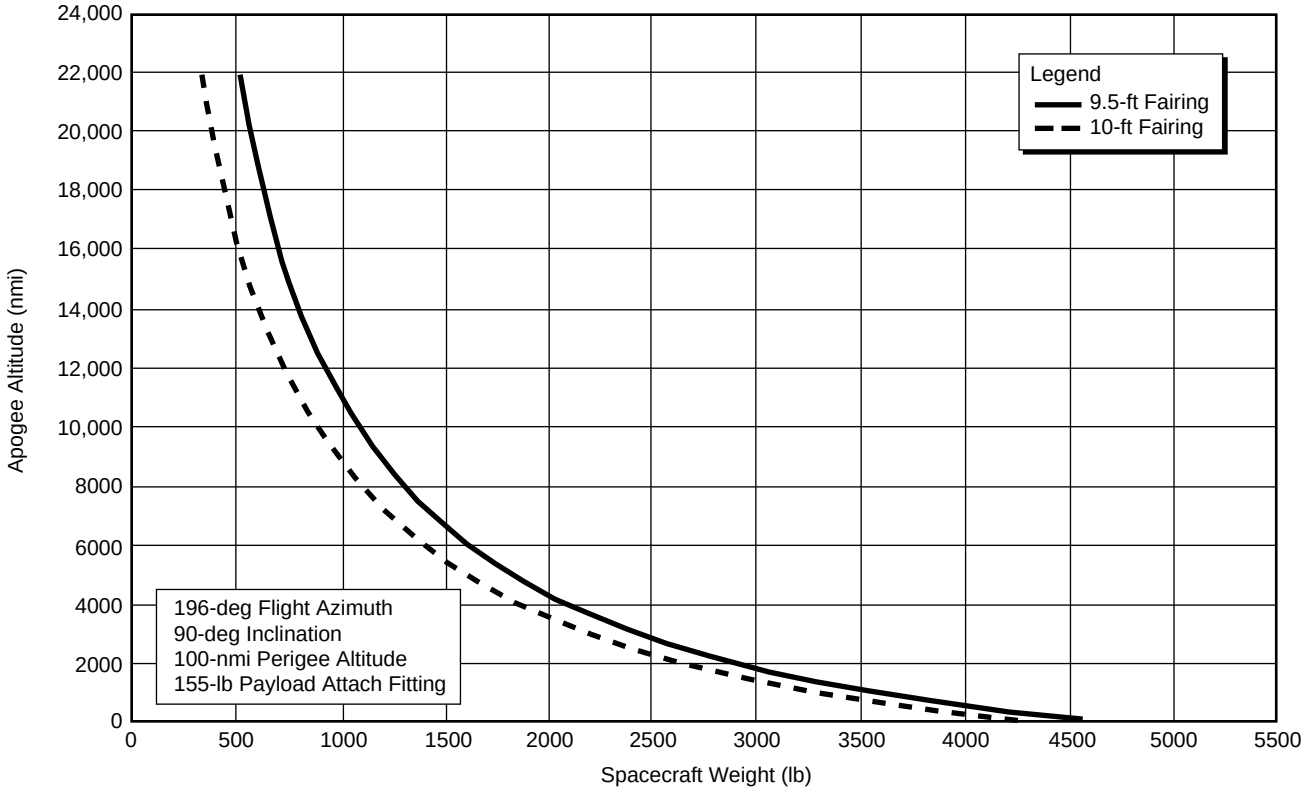

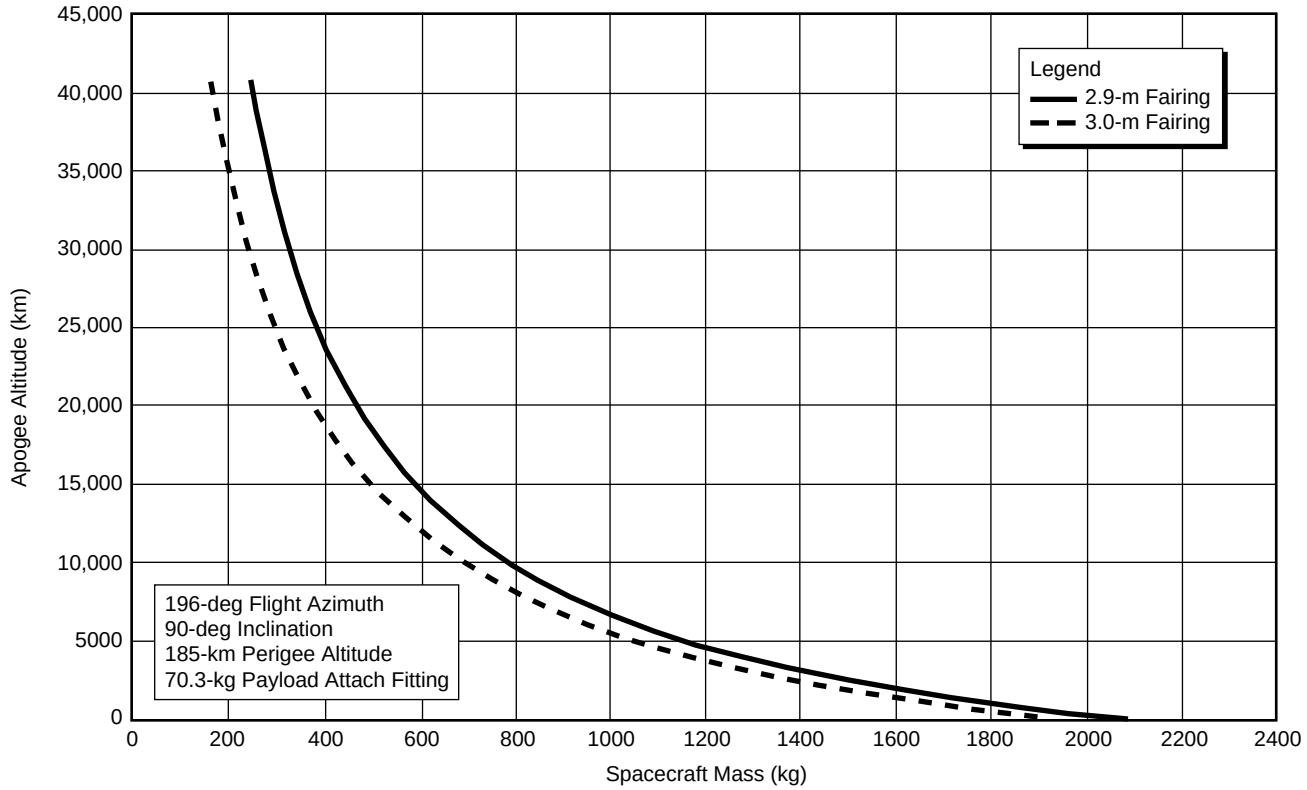

Figure 2-13. Delta II 7320 Vehicle, Two-Stage Apogee Altitude Capability, Western Range (Download Figure)

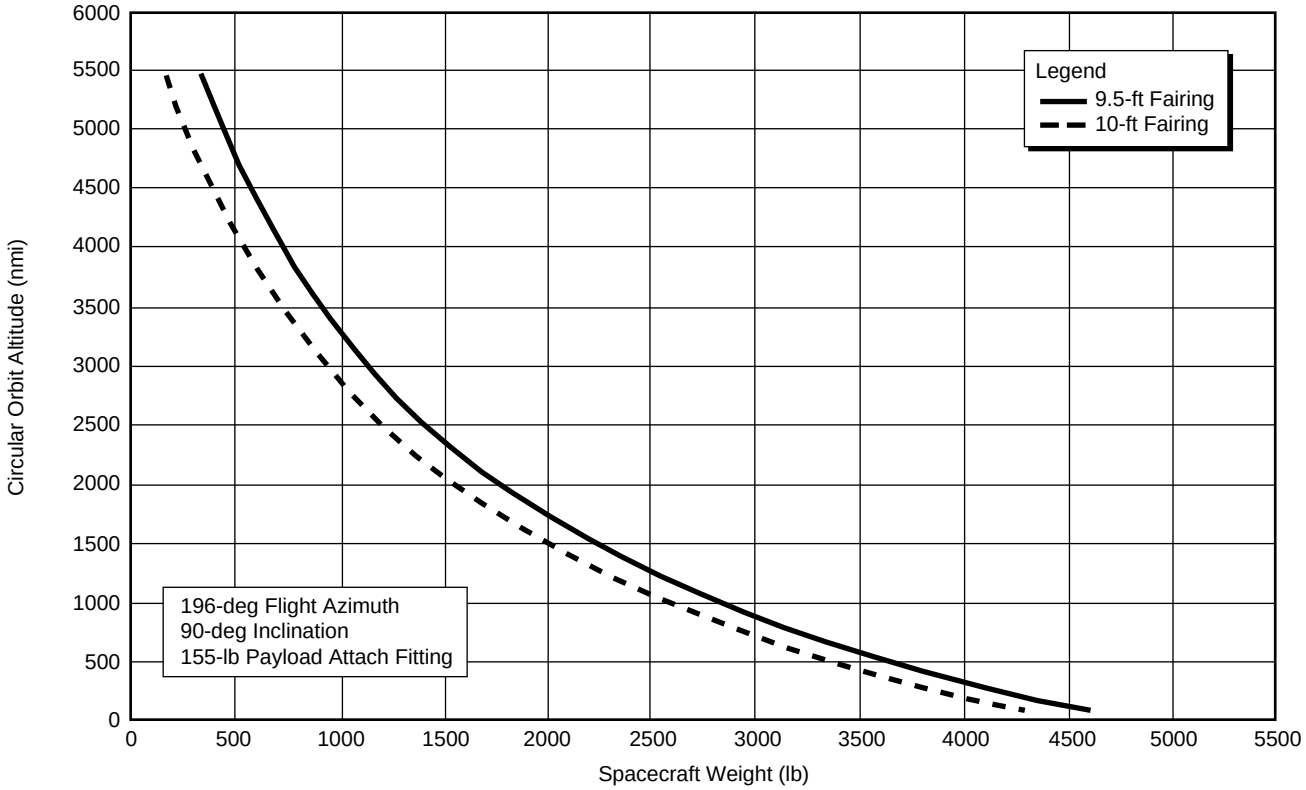

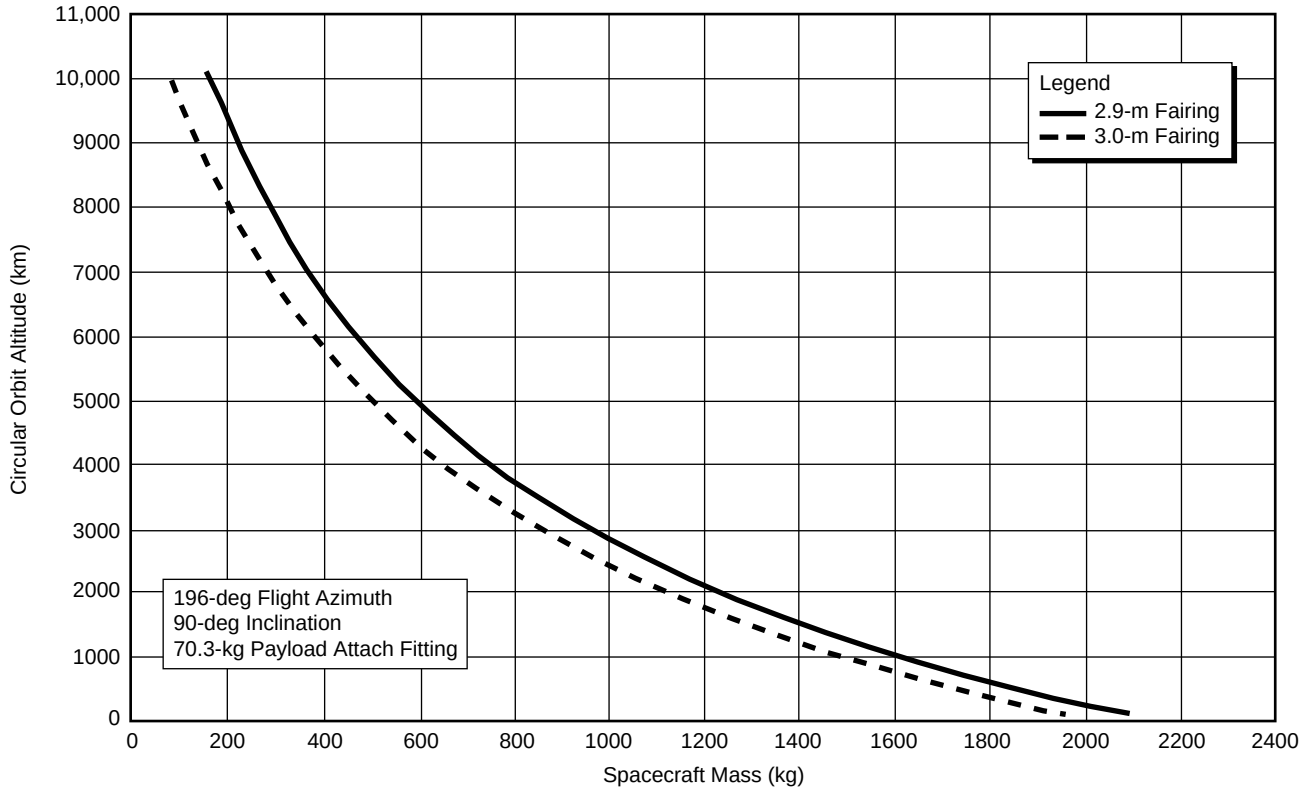

Figure 2-14. Delta II 7320 Vehicle, Two-Stage Circular Orbit Capability, Western Range (Download Figure)

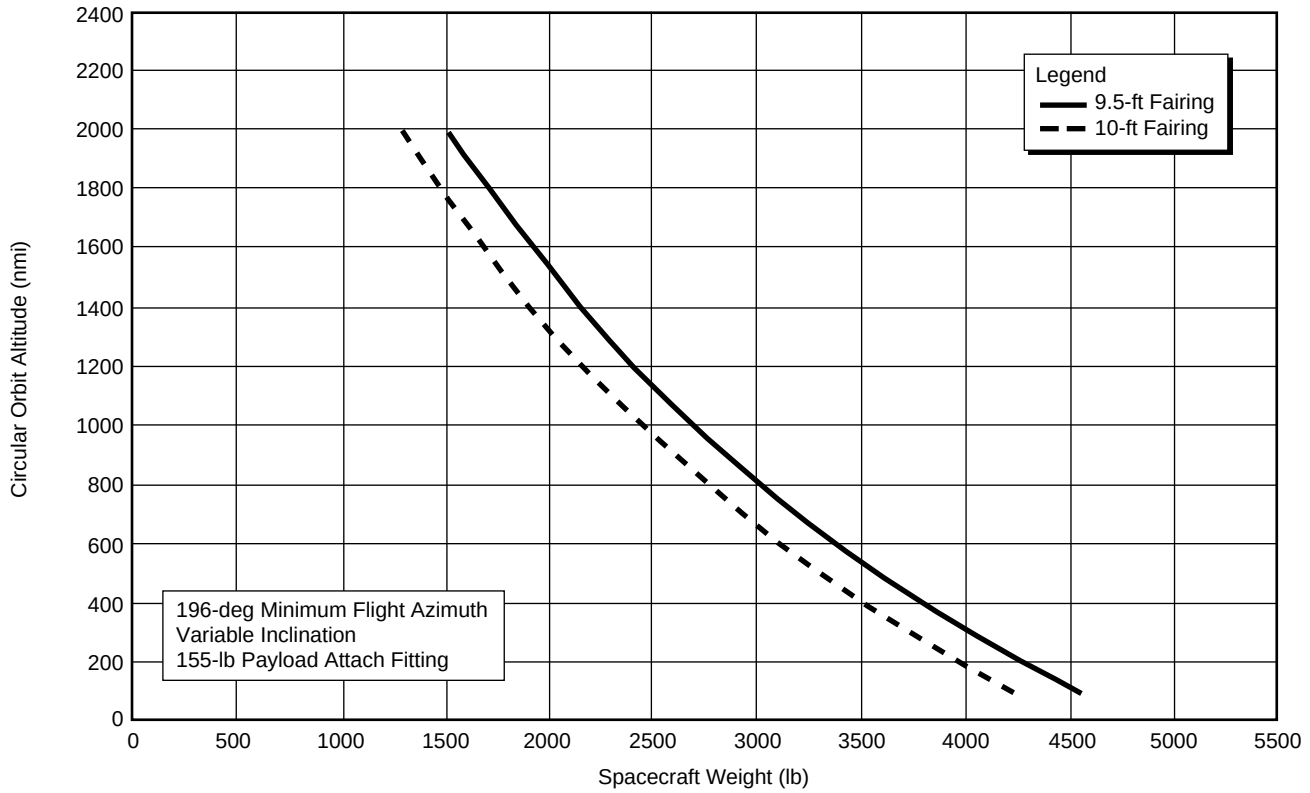

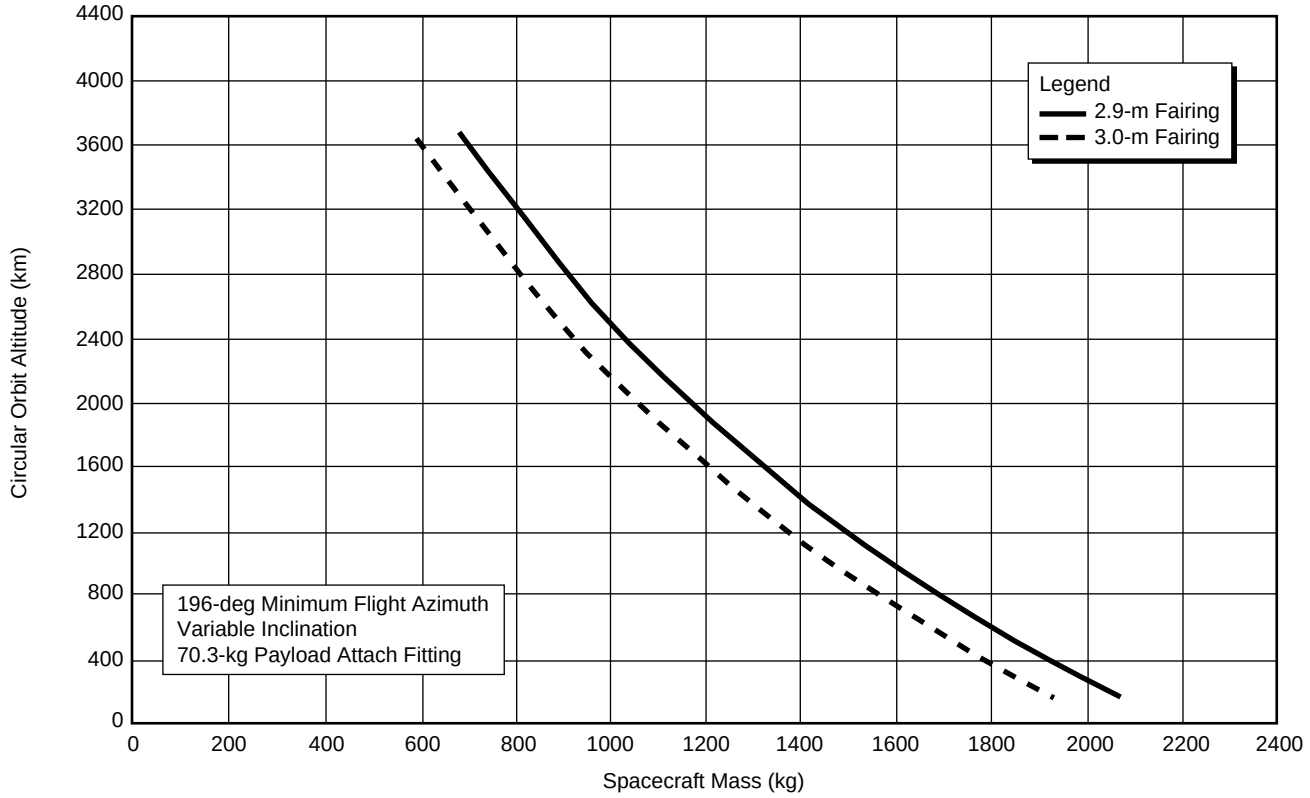

Figure 2-15. Delta II 7320 Vehicle, Two-Stage Sun-Synchronous Orbit Capability, Western Range (Download Figure)

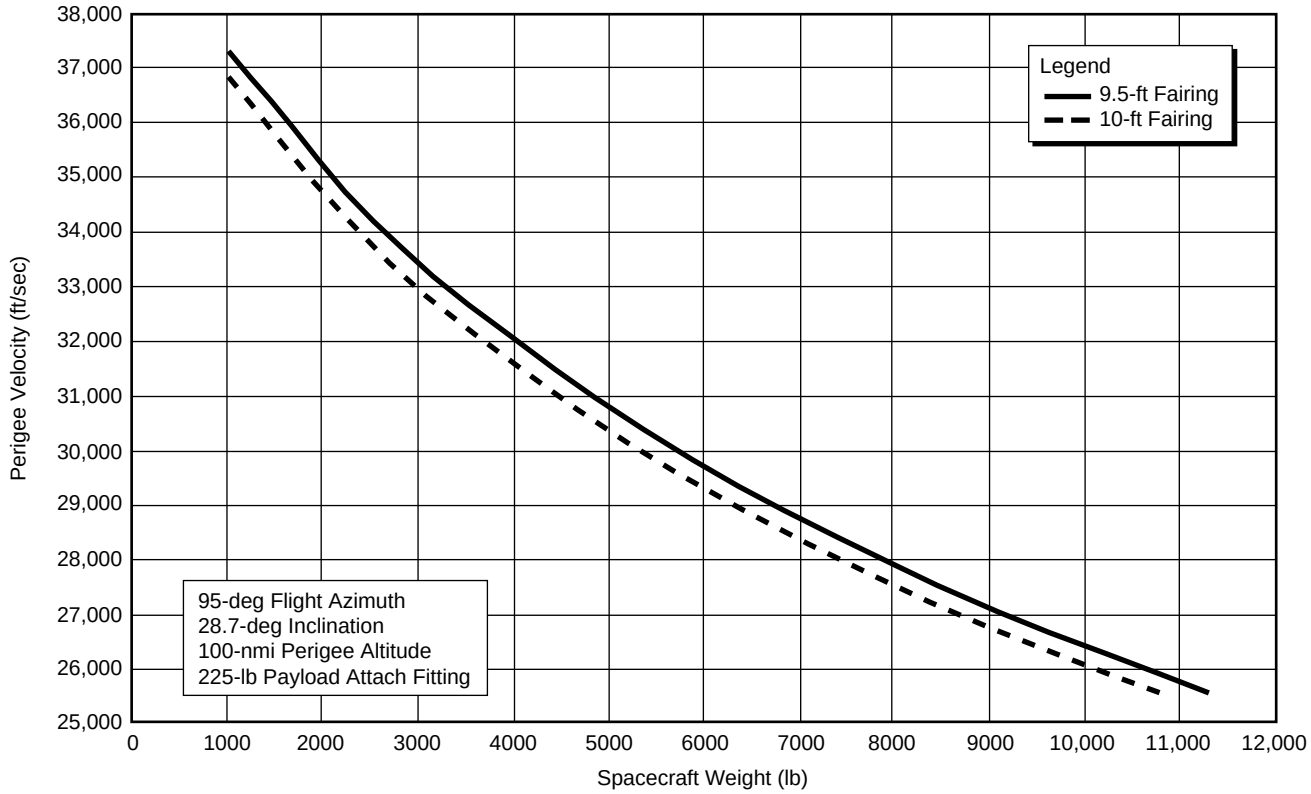

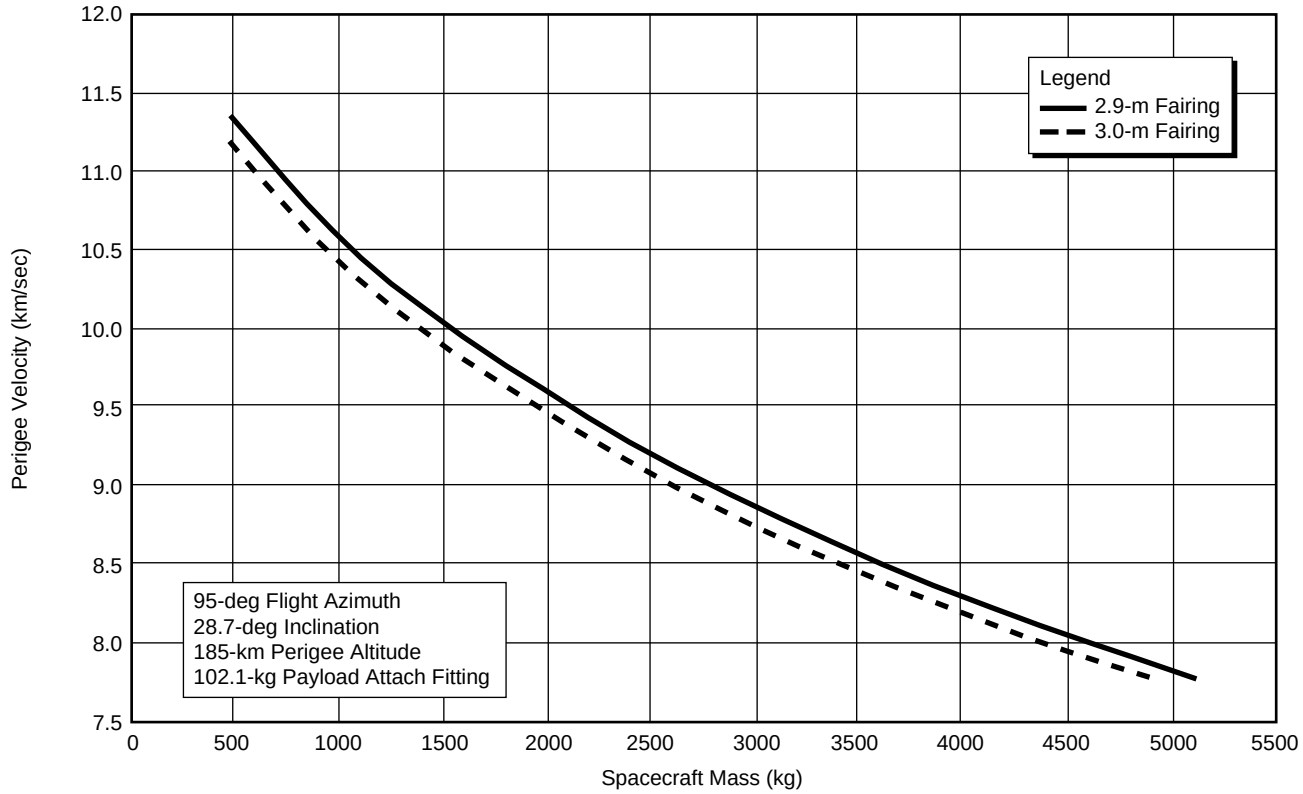

Figure 2-16. Delta II 7920 Vehicle, Two-Stage Perigee Velocity Capability, Eastern Range (Download Figure)

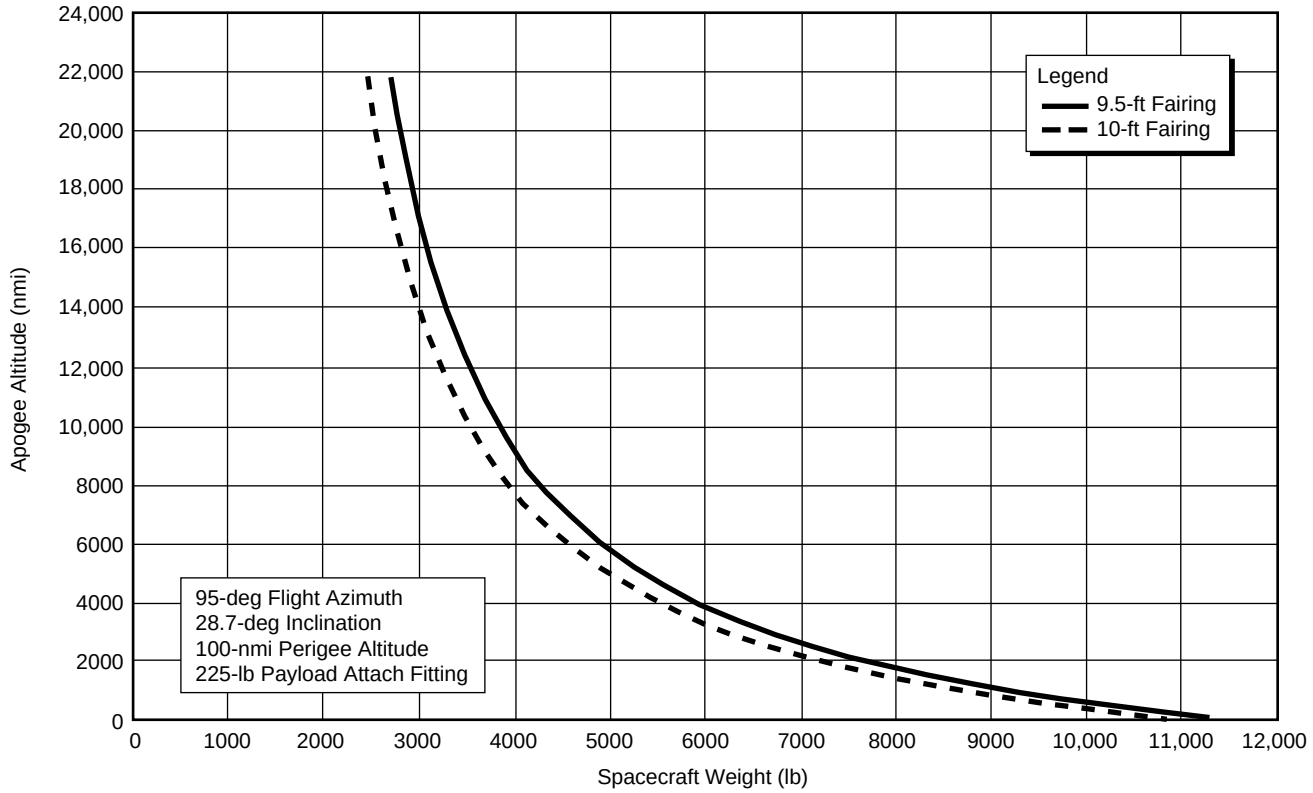

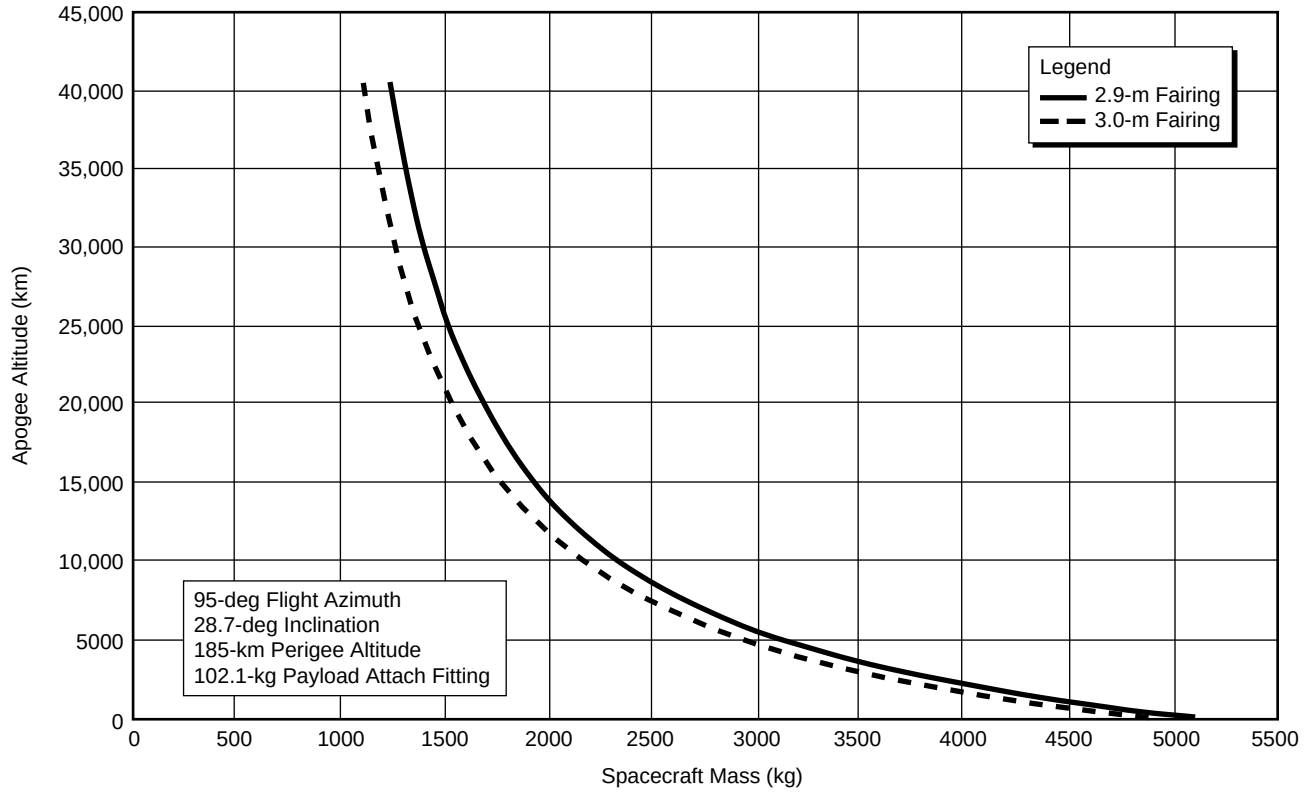

Figure 2-17. Delta II 7920 Vehicle, Two-Stage Apogee Altitiude Capability, Eastern Range (Download Figure)

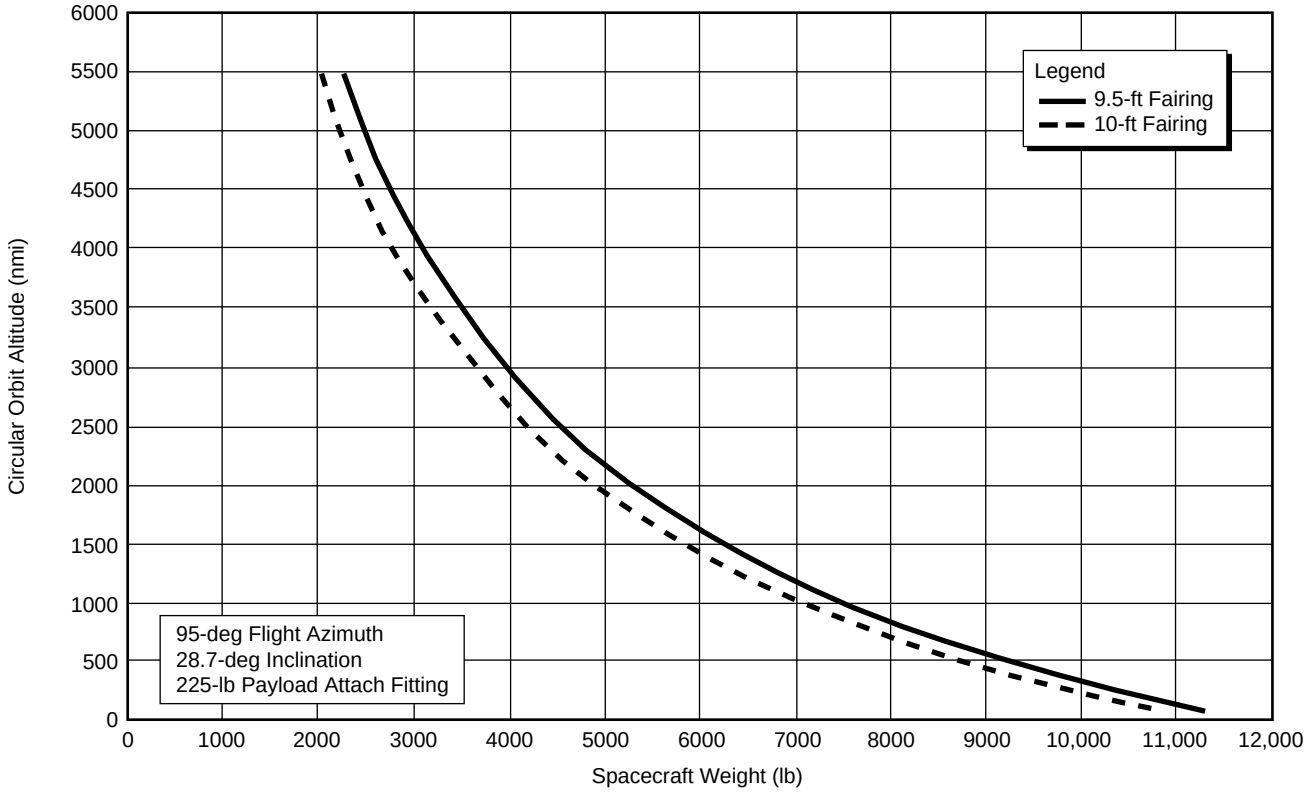

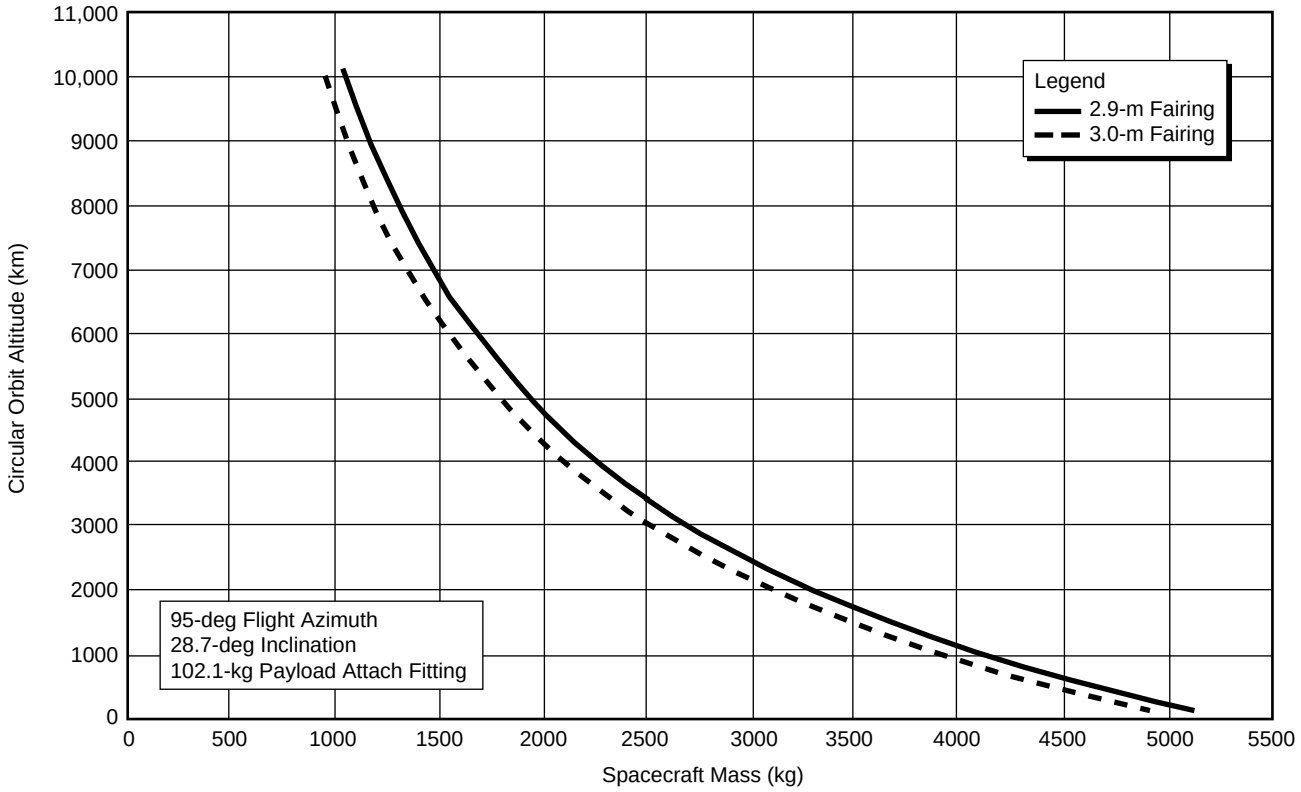

Figure 2-18. Delta II 7920 Vehicle, Two-Stage Circular Orbit Capability, Eastern Range (Download Figure)

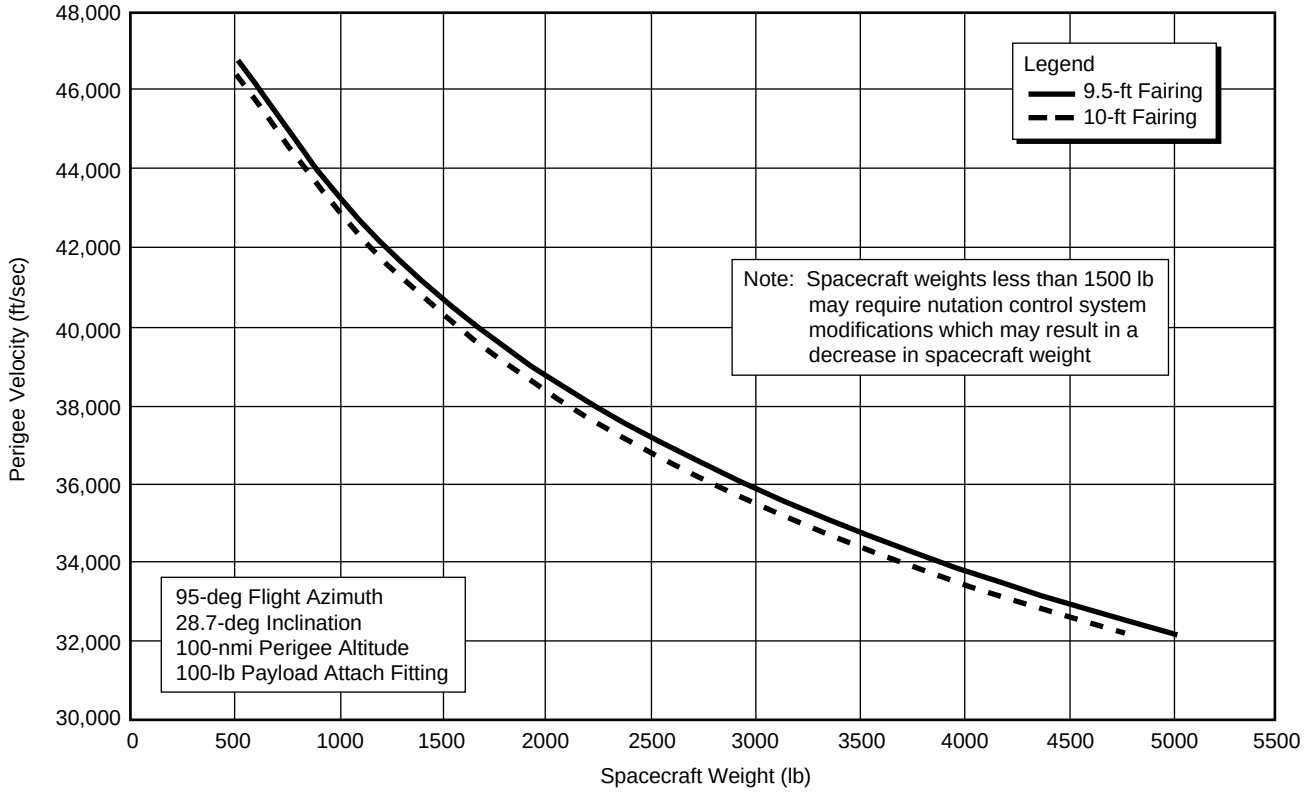

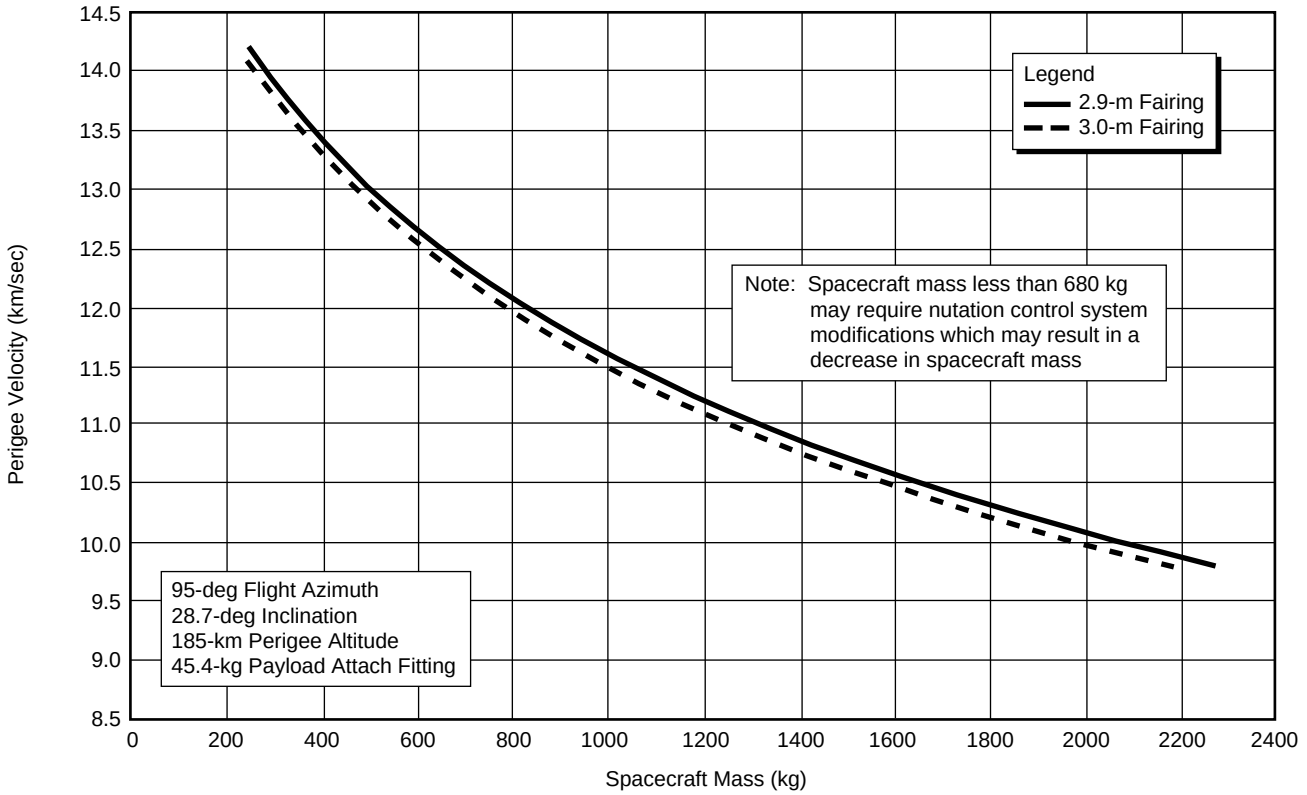

Figure 2-19. Delta II 7925 Vehicle, Three-Stage Perigee Velocity Capability, Eastern Range (Download Figure)

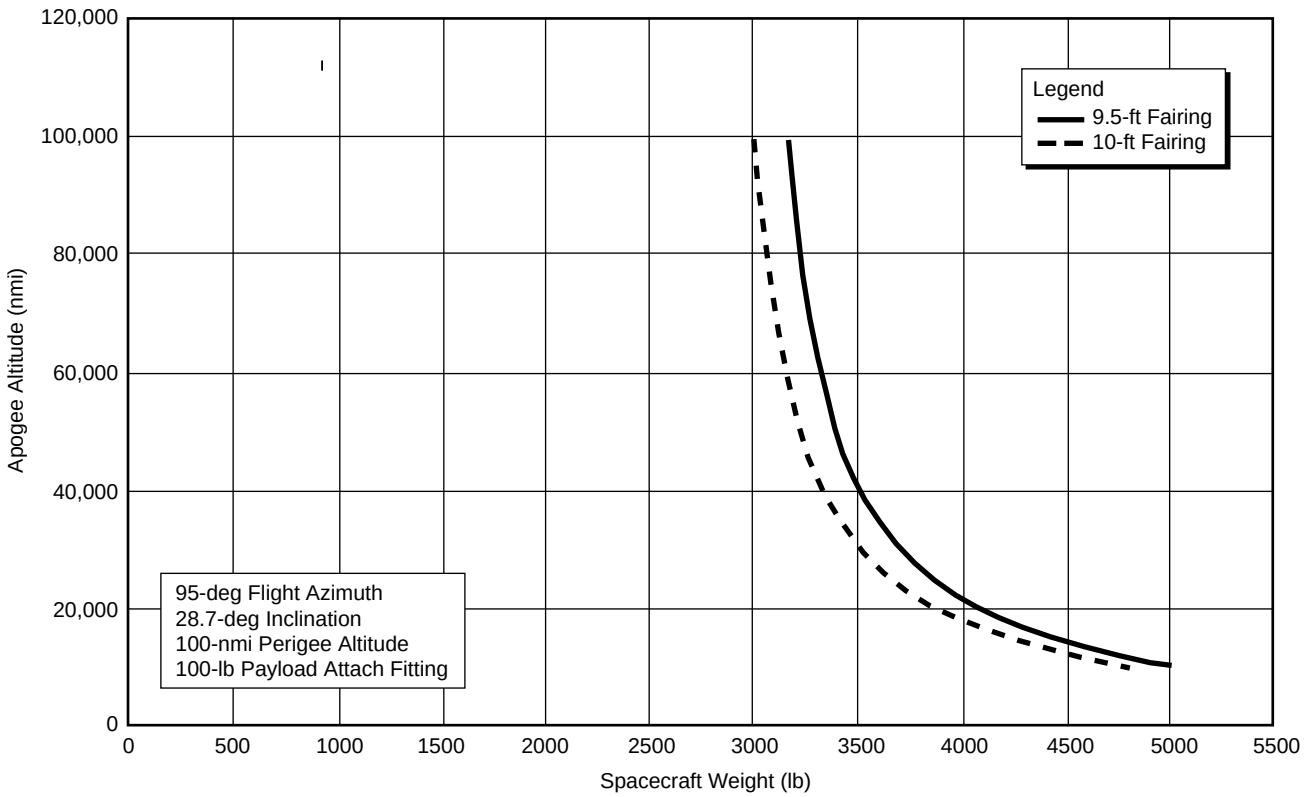

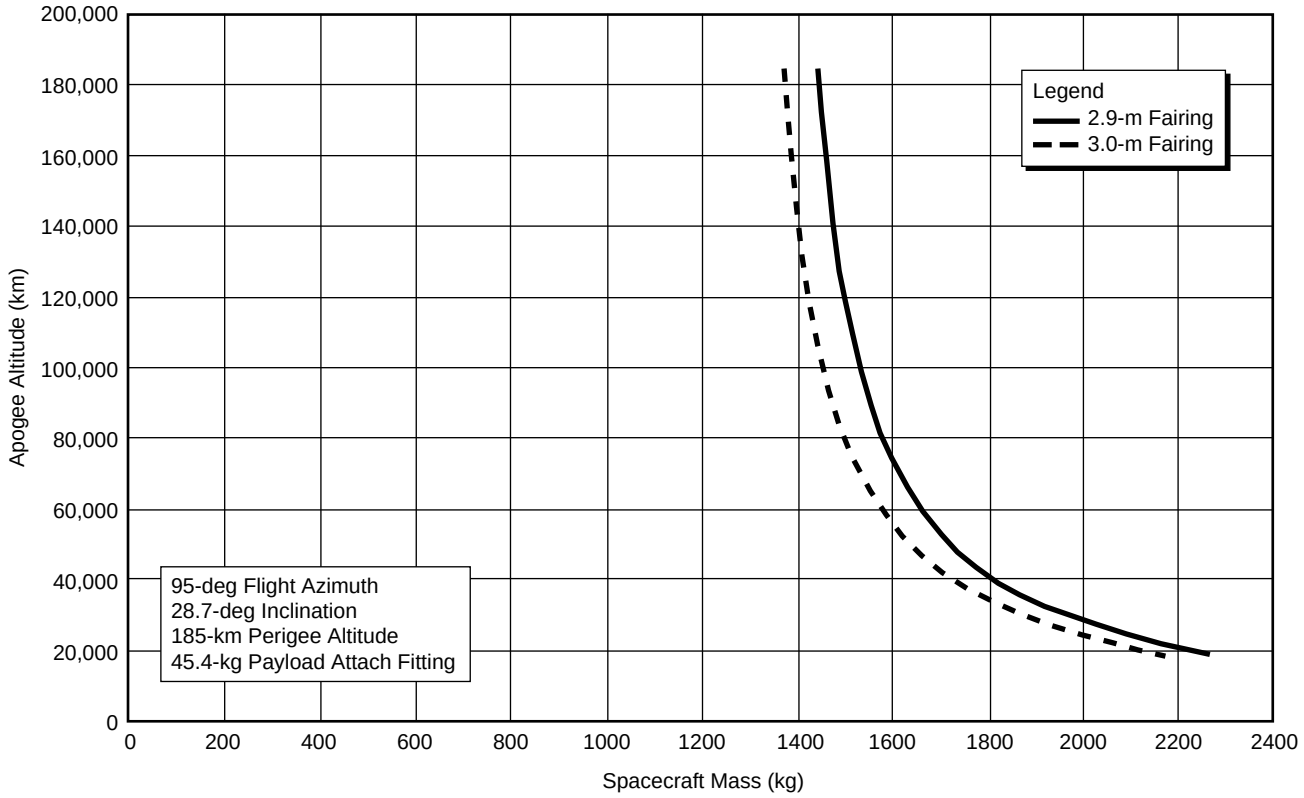

Figure 2-20. Delta II 7925 Vehicle, Three-Stage Apogee Altitude Capability, Eastern Range (Download Figure)

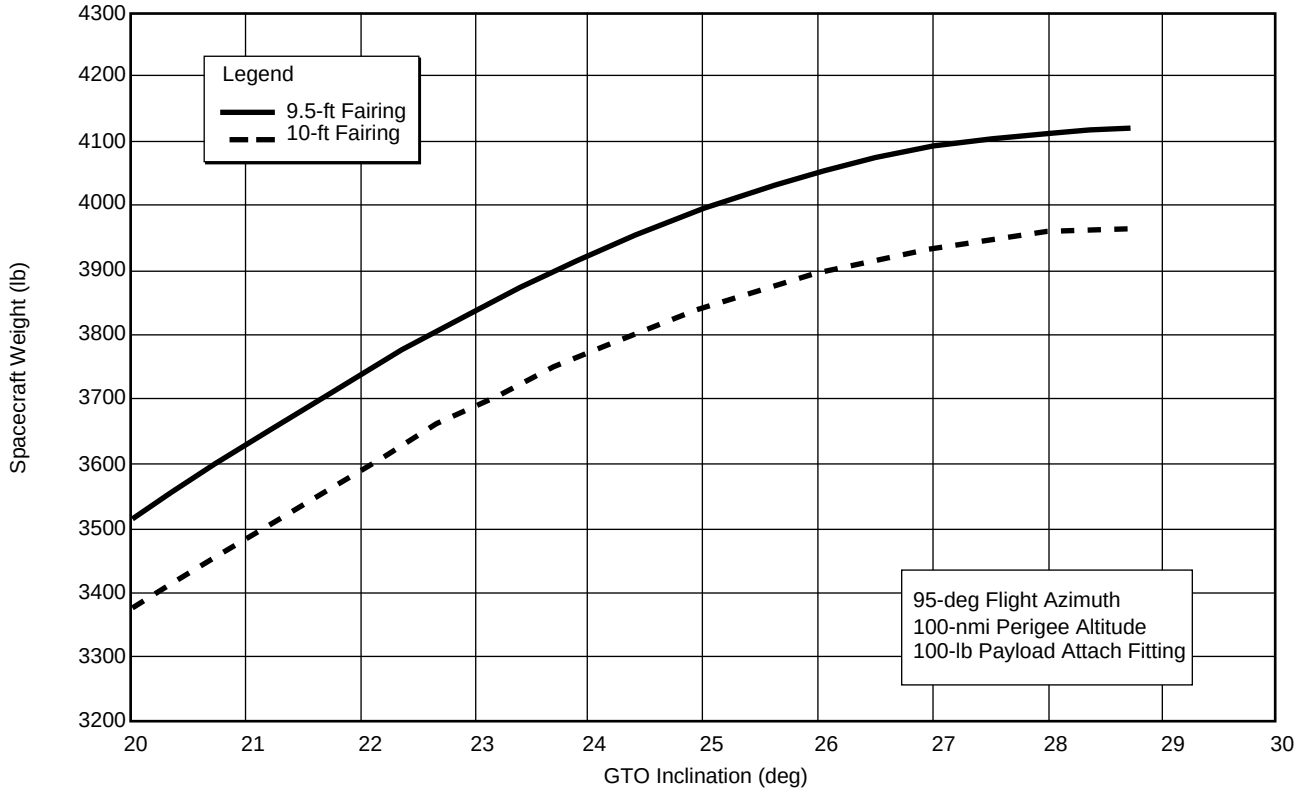

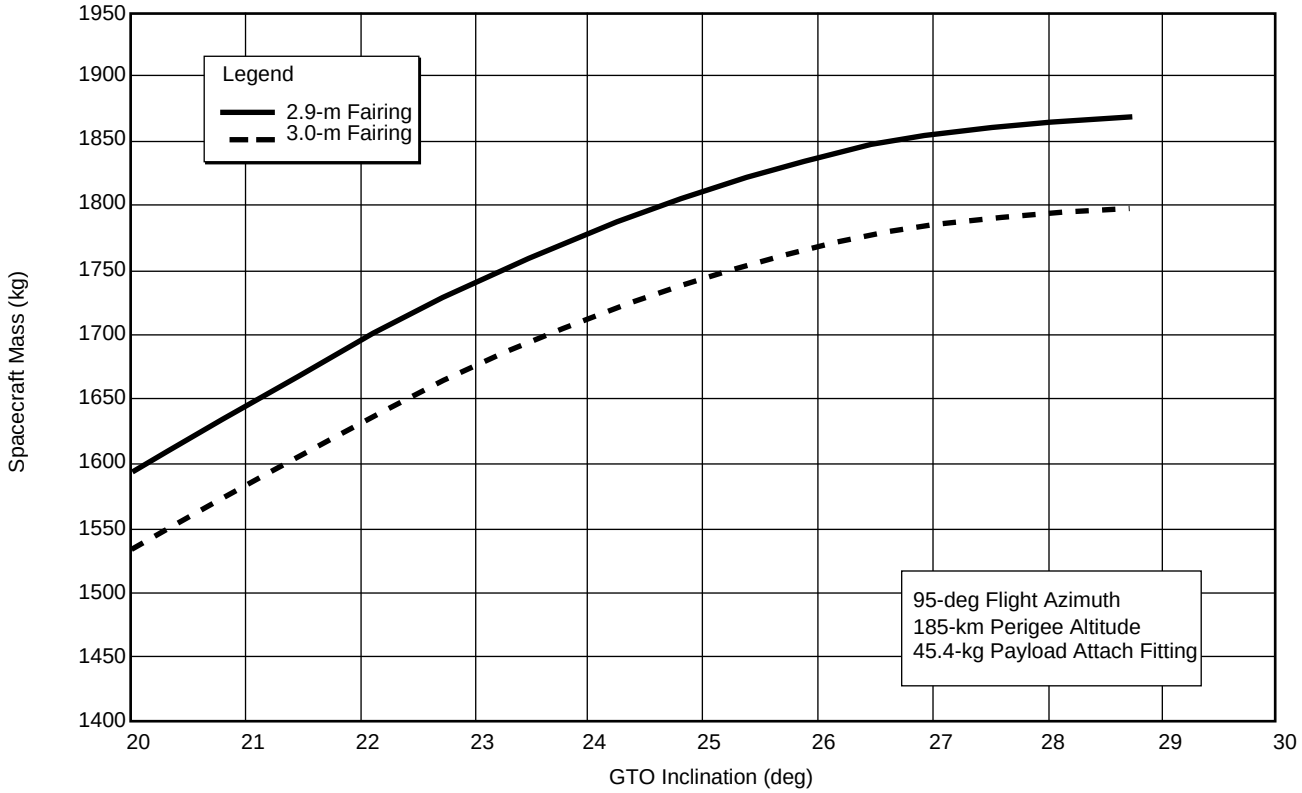

Figure 2-21. Delta II 7925 Vehicle, Three-Stage GTO Inclination Capability, Eastern Range (Download Figure)

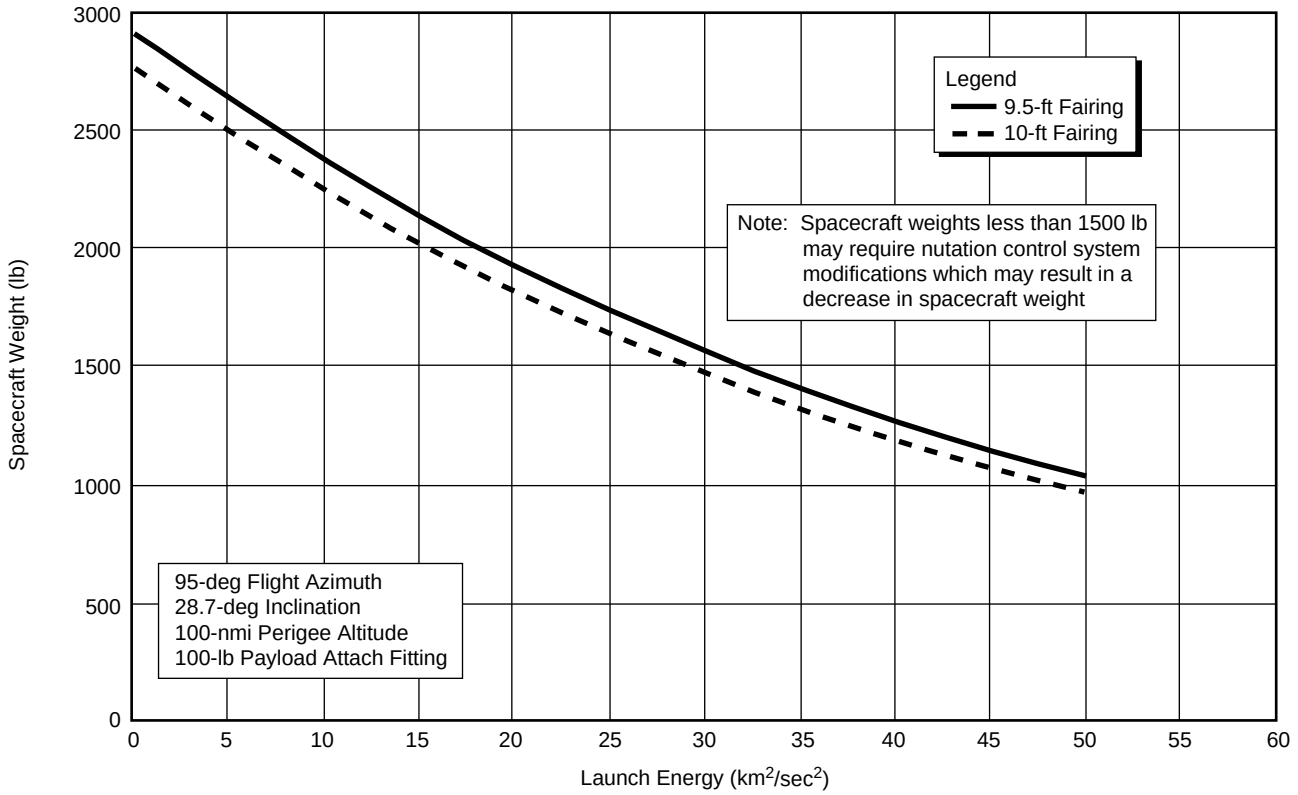

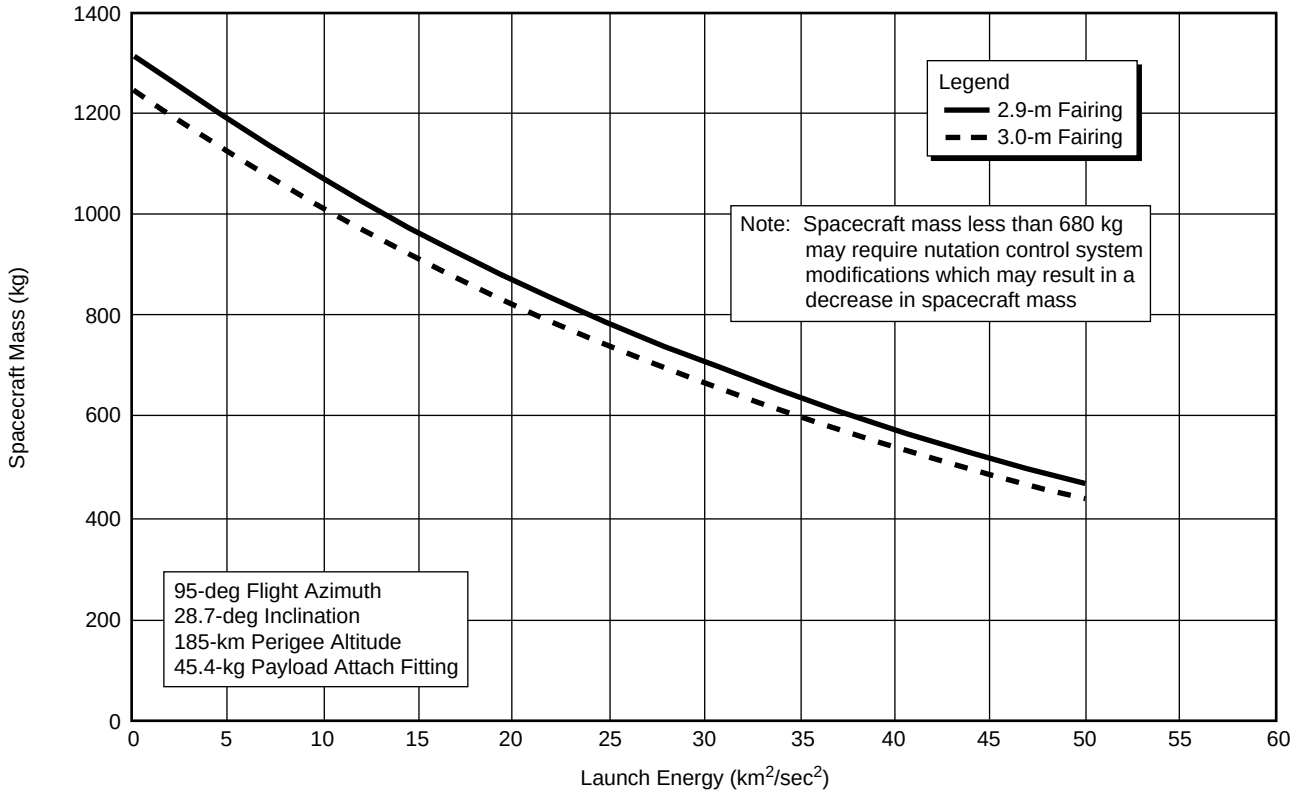

Figure 2-22. Delta II 7925 Vehicle, Three-Stage Planetary Mission Capability, Eastern Range (Download Figure)

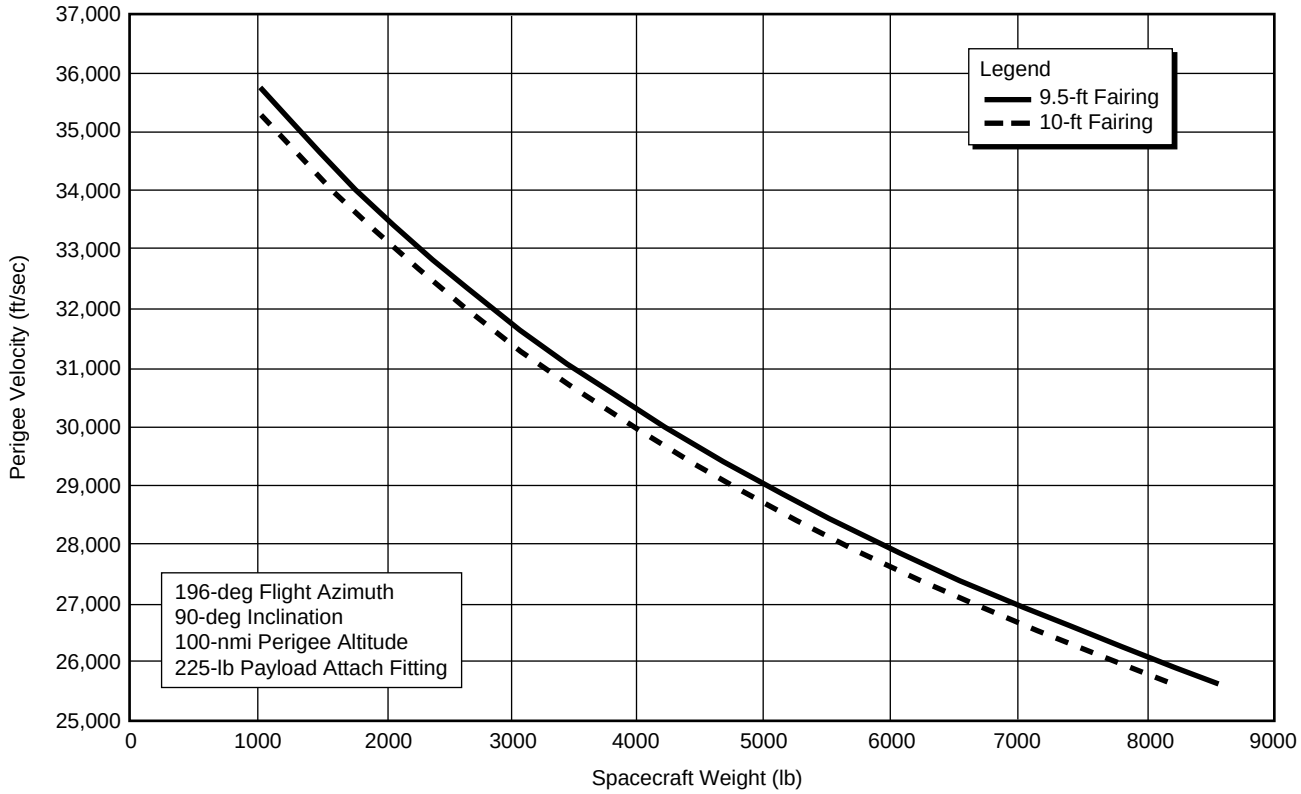

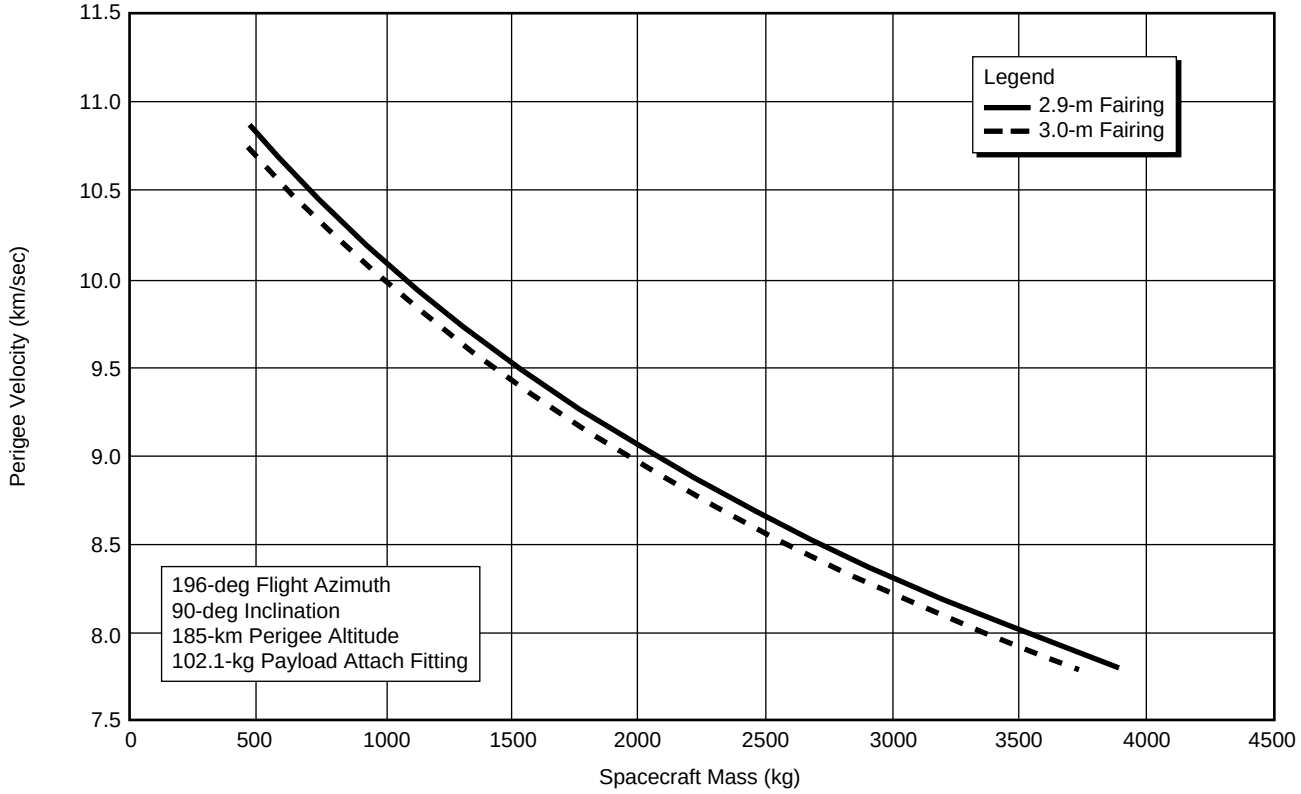

Figure 2-23. Delta II 7920 Vehicle, Two-Stage Perigee Velocity Capability, Western Range (Download Figure)

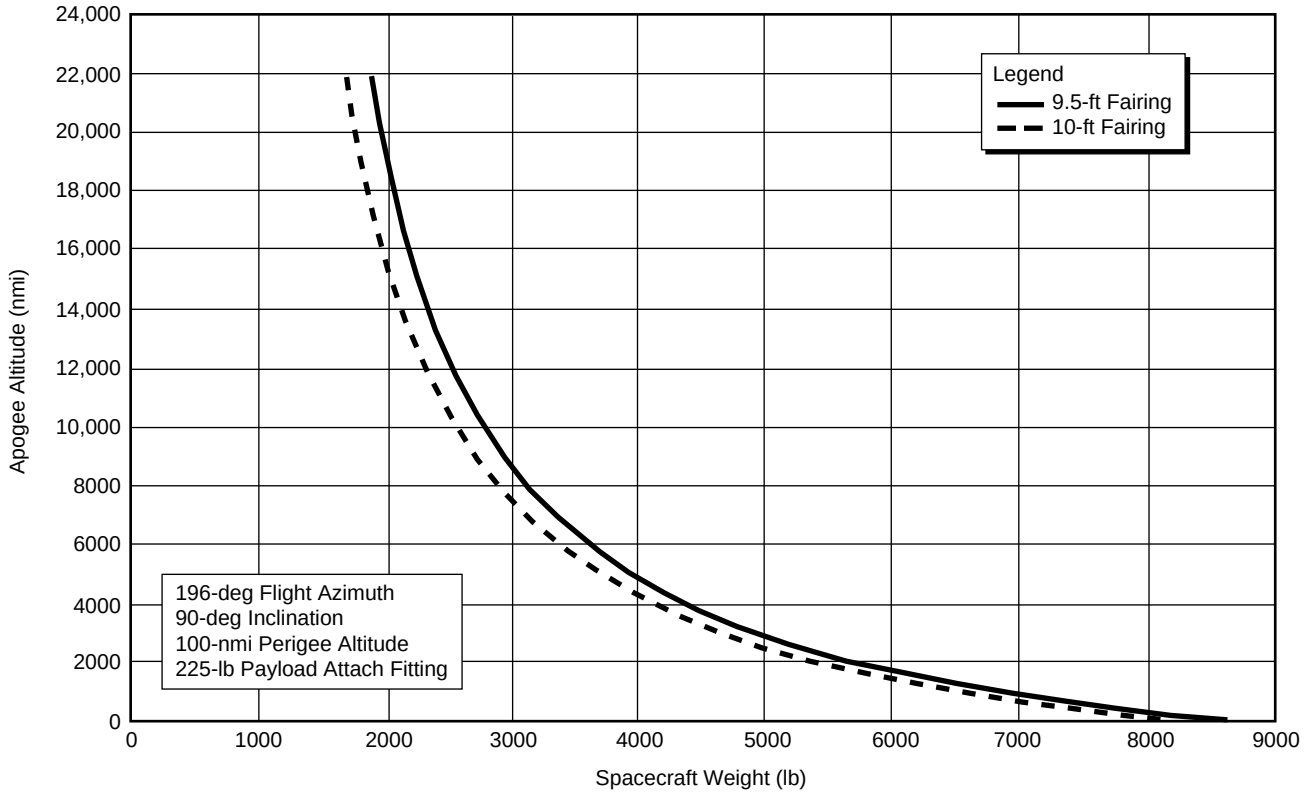

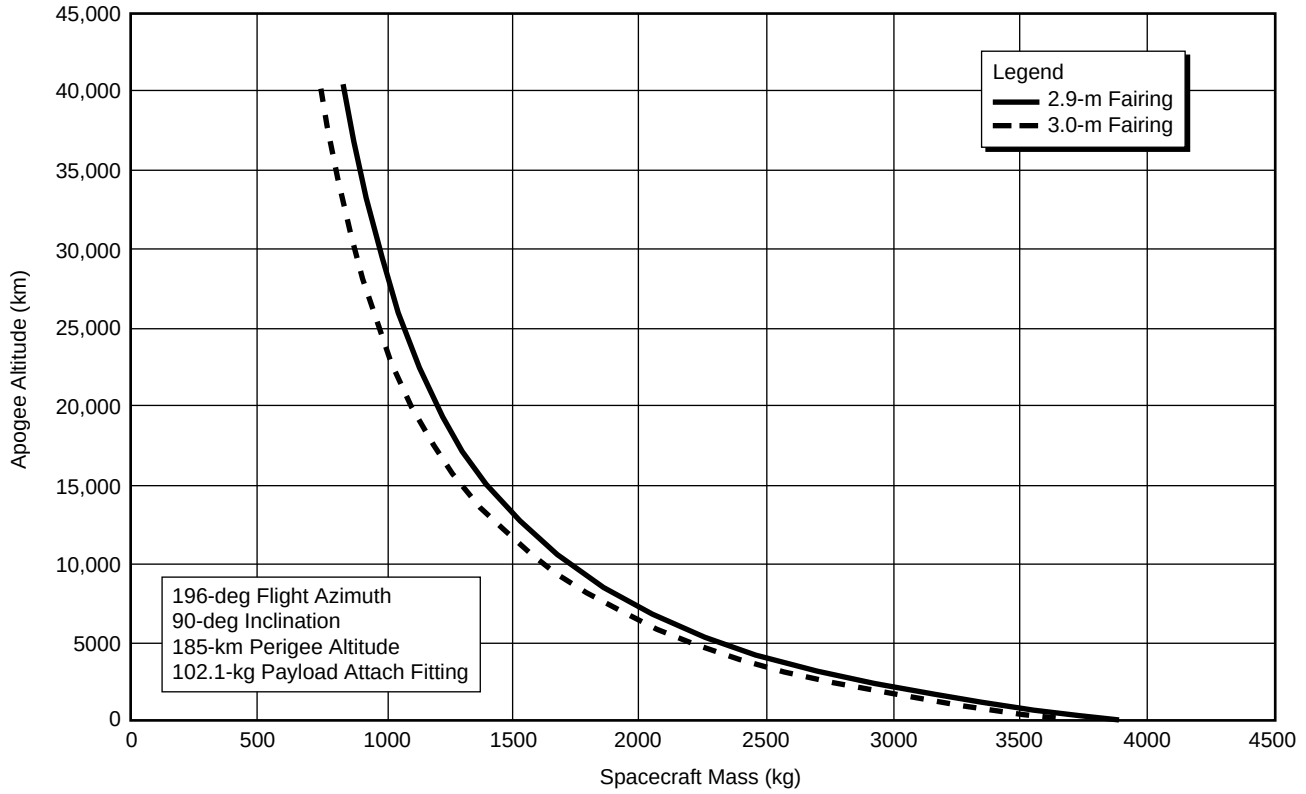

Figure 2-24. Delta II 7920 Vehicle, Two-Stage Apogee Altitude Capability, Western Range (Download Figure)

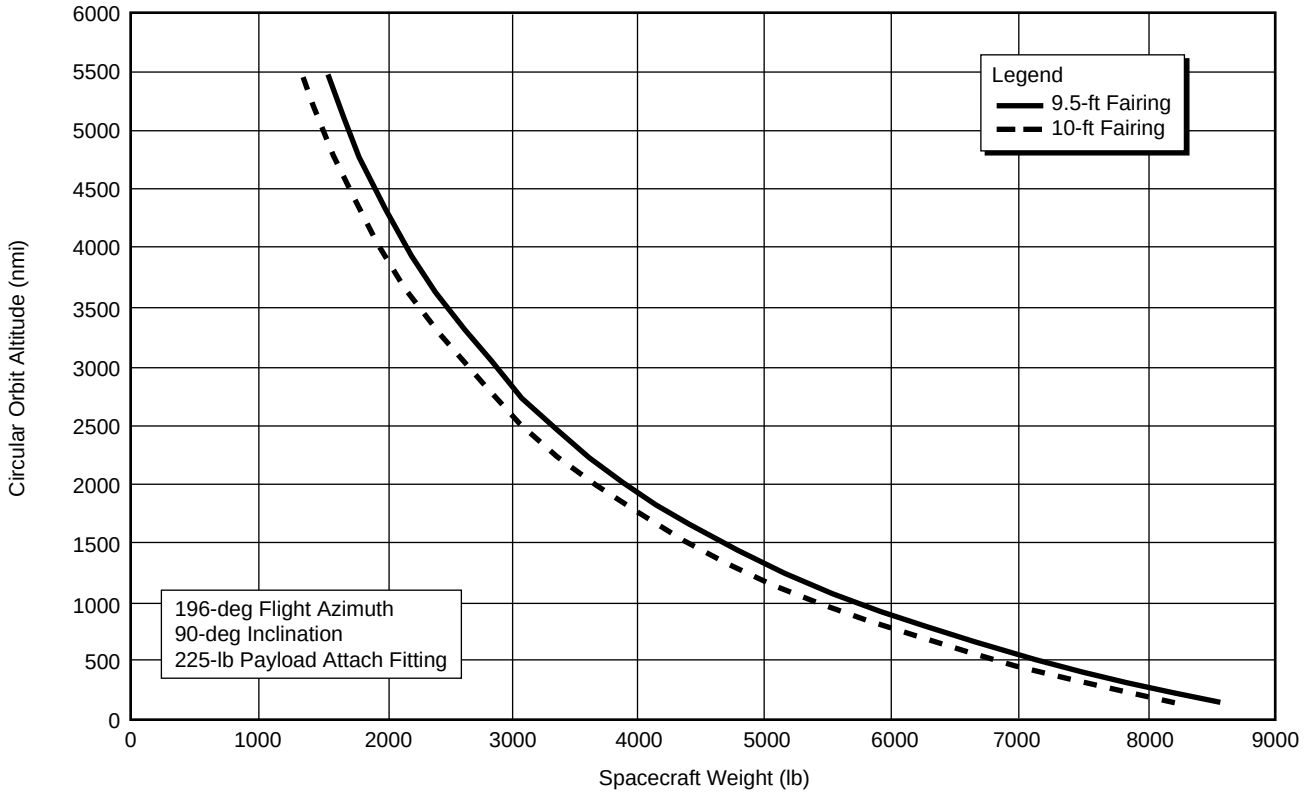

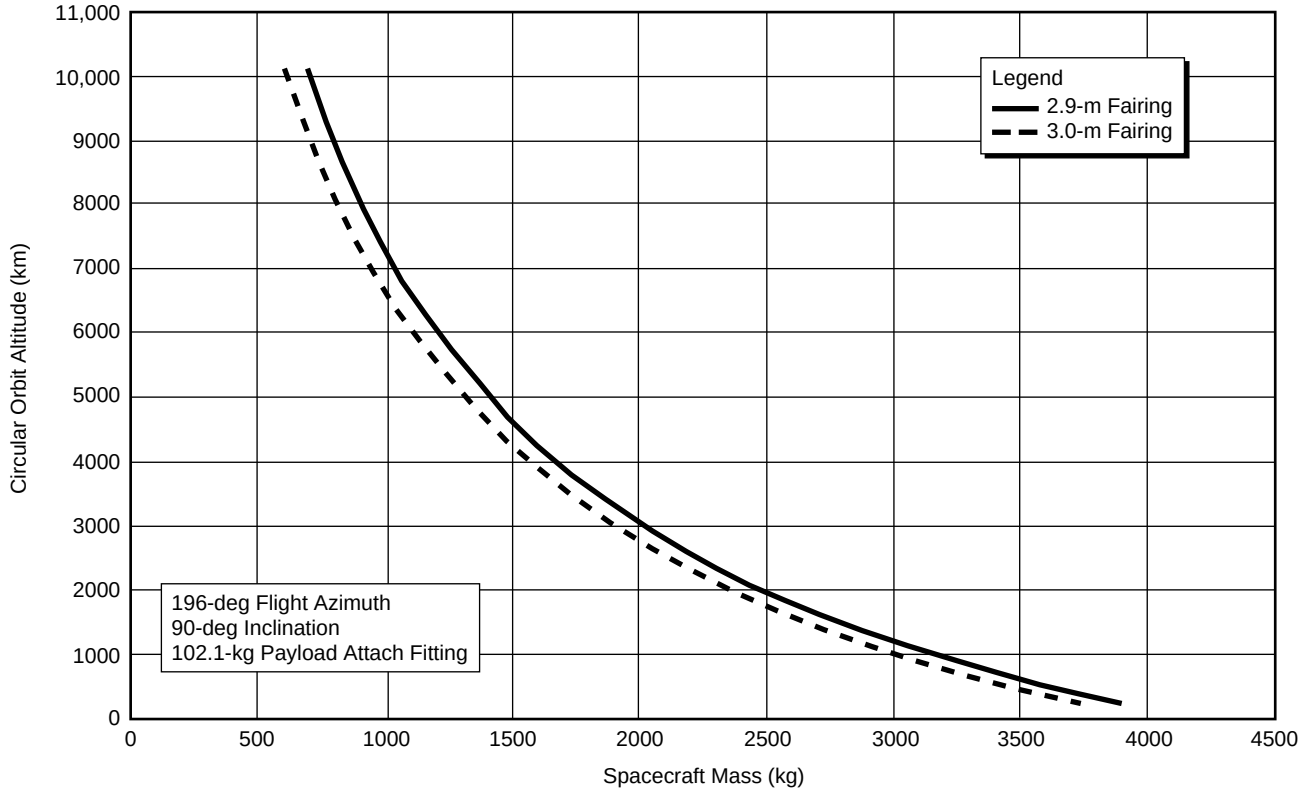

Figure 2-25. Delta II 7920 Vehicle, Two-Stage Circular Orbit Capability, Western Range (Download Figure)

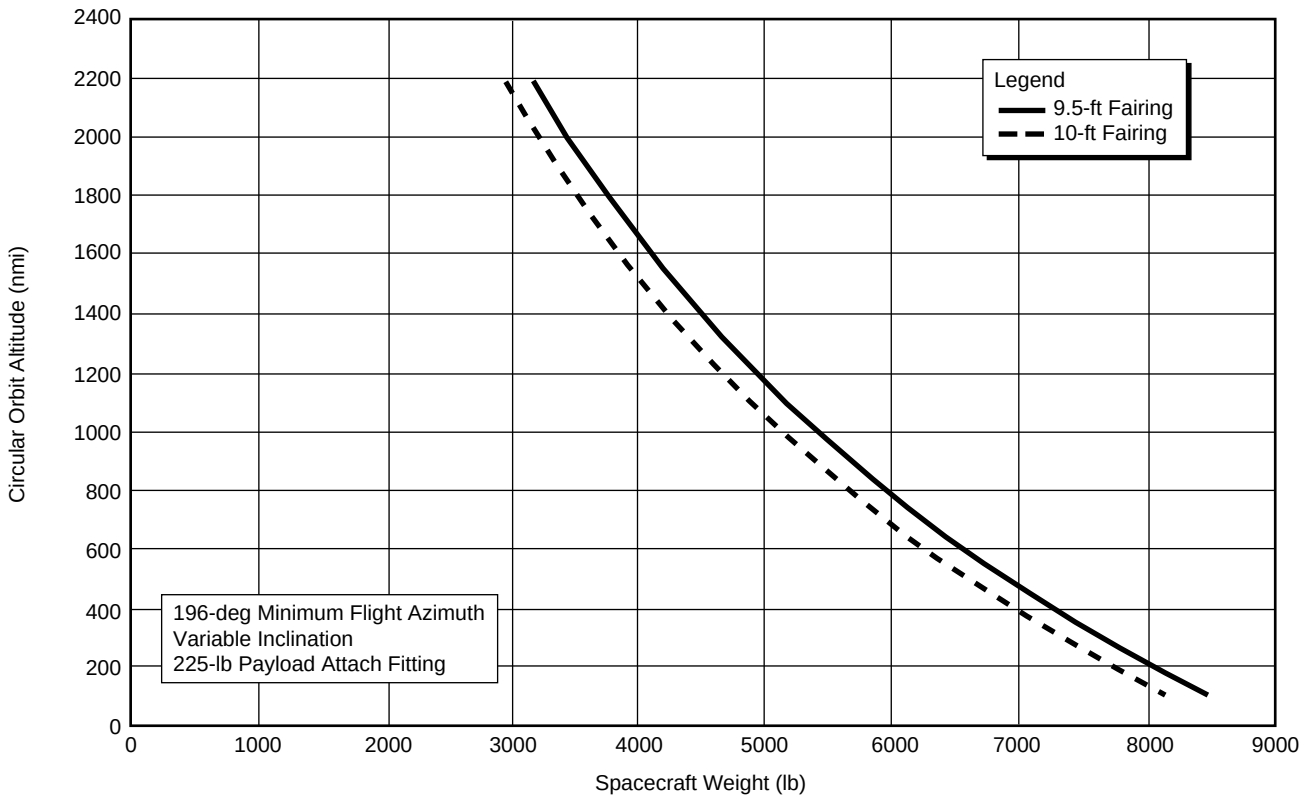

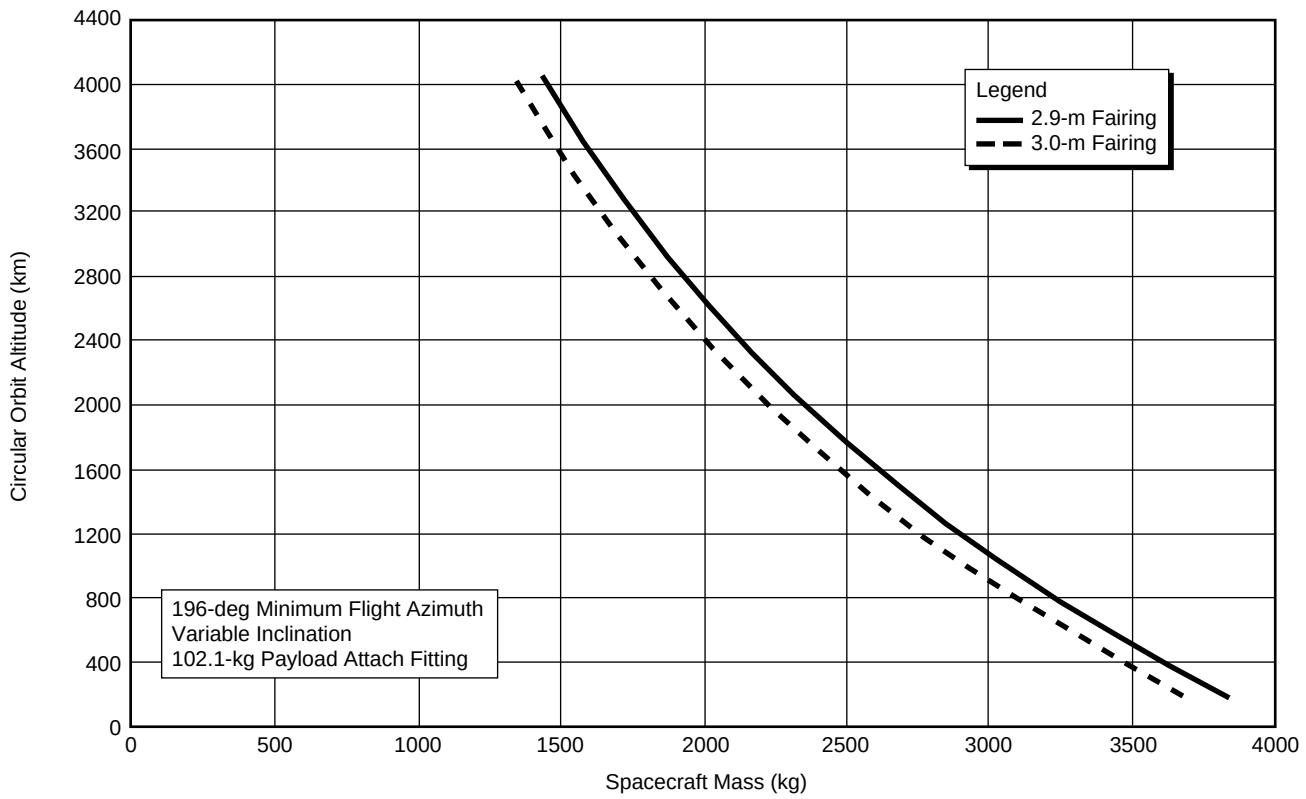

Figure 2-26. Delta II 7920 Vehicle, Two-Stage Sun-Synchronous Orbit Capability, Western Range (Download Figure)

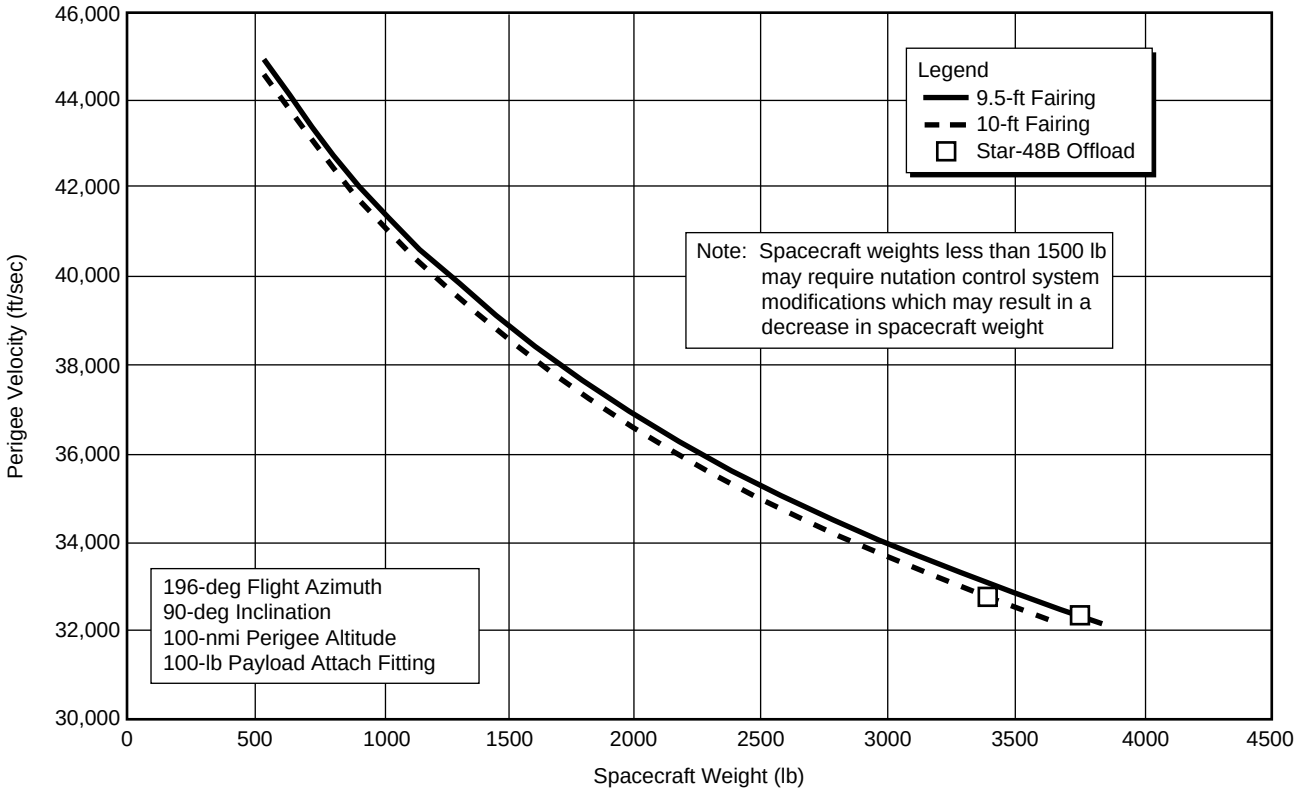

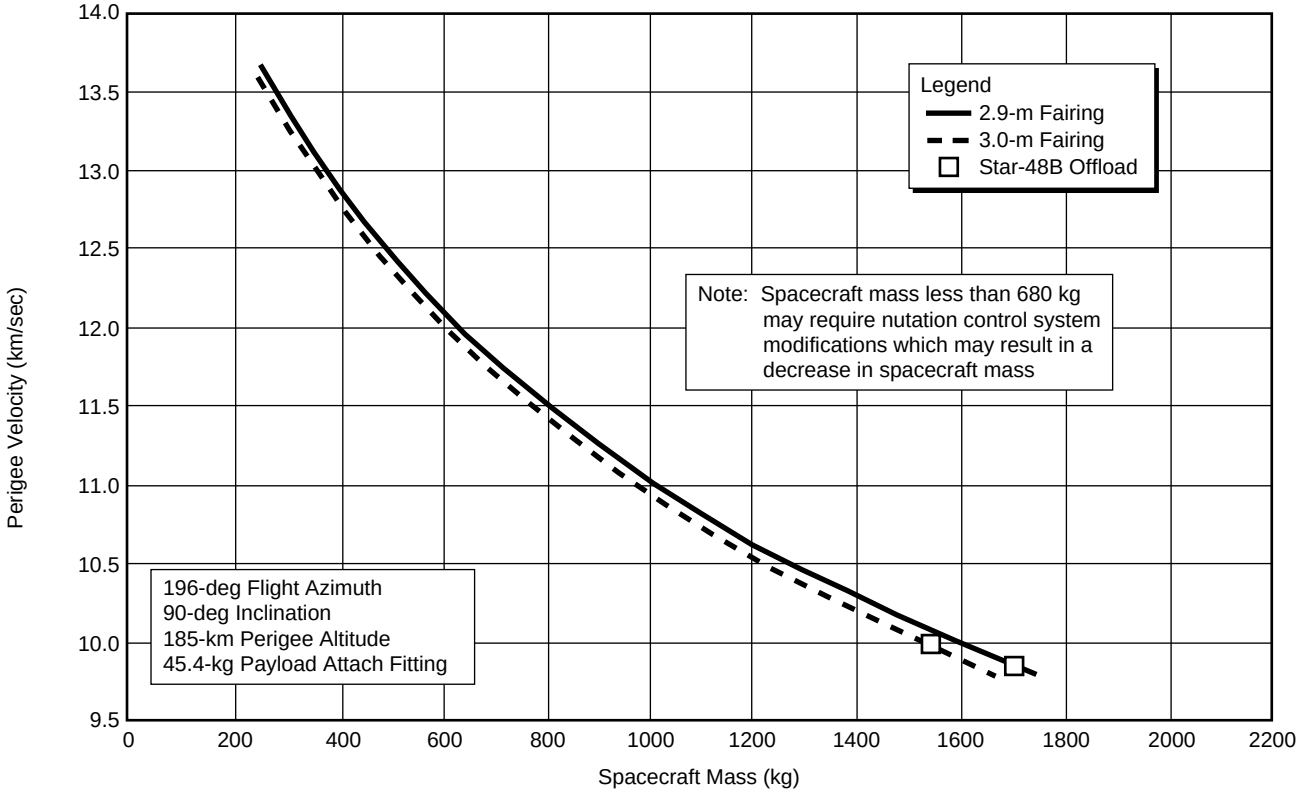

Figure 2-27. Delta II 7925 Vehicle, Three-Stage Perigee Velocity Capability, Western Range (Download Figure)

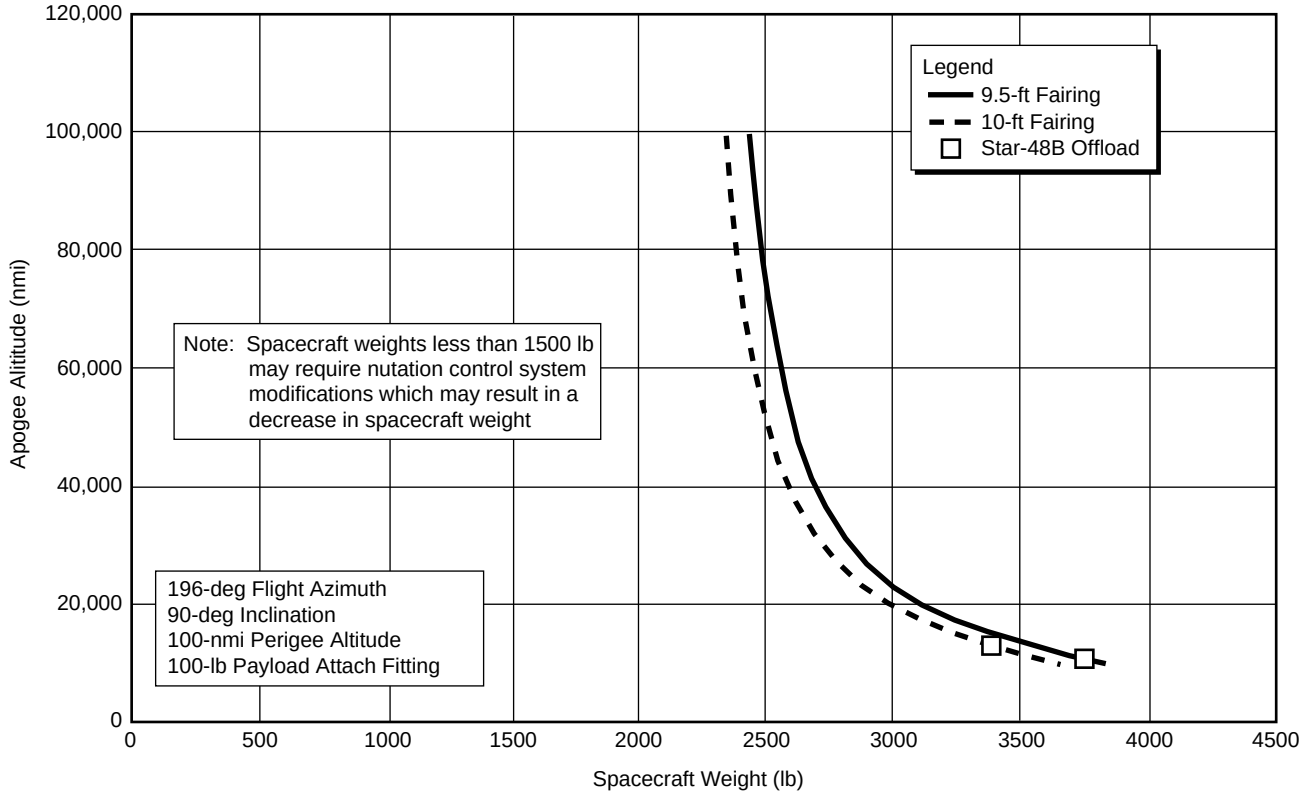

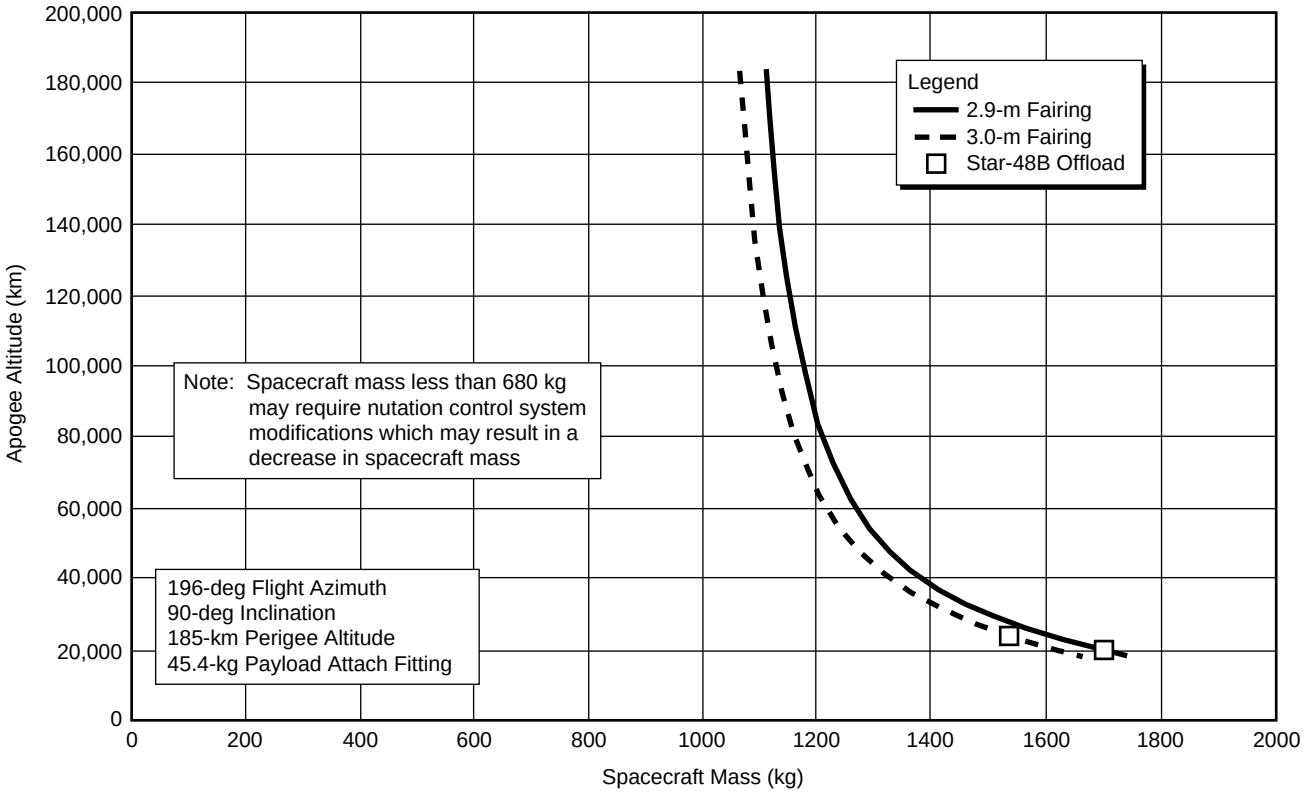

Figure 2-28. Delta II 7925 Vehicle, Three-Stage Apogee Altitude Capability, Western Range (Download Figure)

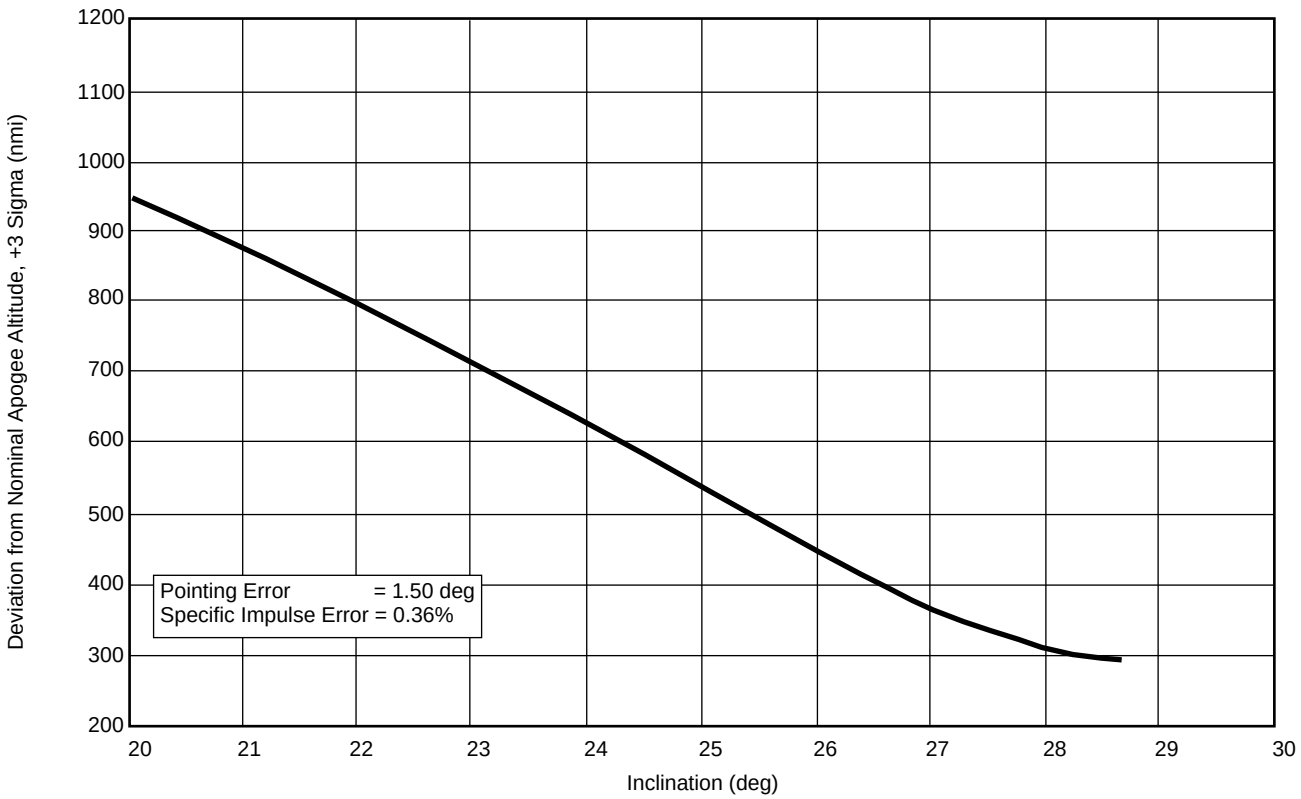

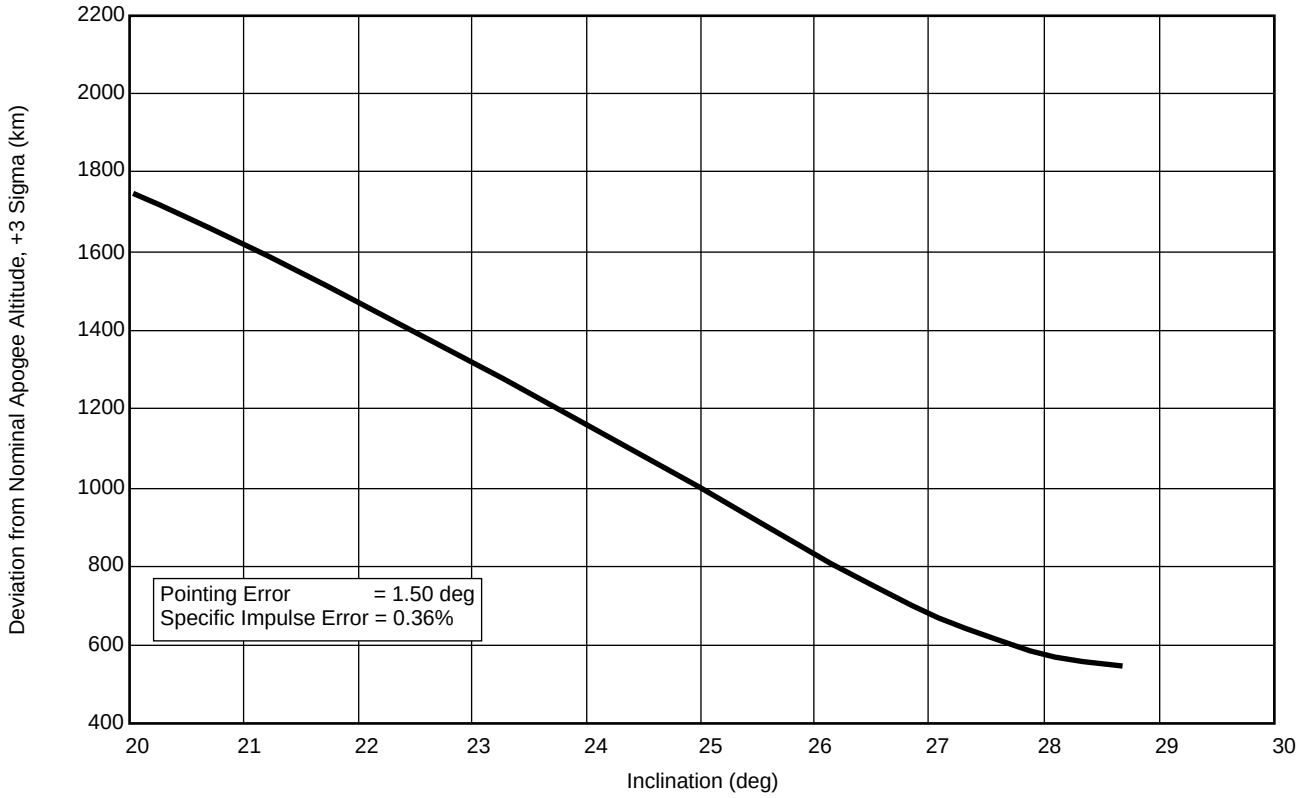

Figure 2-29. Delta II 7925 Vehicle, Three-Stage GTO Deviations Capability, Eastern Range (Download Figure)

Section 3
SPACECRAFT FAIRINGS

The spacecraft is protected by a fairing which shields it from aerodynamic buffeting and heating while in the lower atmosphere. The fairing is jettisoned during second-stage powered flight at an altitude of at least 125 km (67 nmi). A general discussion of the Delta fairings is presented in Section 3.1. Detailed descriptions and envelopes for the 2.9-m (9.5-ft) and 3-m (10-ft) fairings are presented in Sections 3.2, 3.3, and 3.4 .

3.1 GENERAL DESCRIPTION

The envelopes presented in the following sections define the maximum allowable static dimensions of the spacecraft (including manufacturing tolerances) for the spacecraft/attach fitting interface. If dimensions are maintained within these envelopes, there will be no contact of the spacecraft with the fairing during flight, provided that the frequency and structural stiffness characteristics of the spacecraft are in accordance with the limits specified in Section 4.2.3. These envelopes include allowances for relative static/dynamic deflections between the launch vehicle and spacecraft. Also included are the manufacturing tolerances of the launch vehicle as well as the thickness of the acoustic blanket installed on the fairing interior (including billowing). The blanket configurations available are described in Table 3-1.

Clearance layouts and analyses are performed and, if necessary, critical clearances are measured after the fairing is installed to ensure positive clearance during flight. To accomplish this, it is important that the spacecraft description (refer to Section 8) include an accurate definition of the physical location of all points on the spacecraft that are within 51 mm (2 in.) of the allowable envelope. The dimensions must include the maximum manufacturing tolerances.

Electrical umbilical cabling to the spacecraft (if required) is attached to the inside surface of the fairing shell. Electrical disconnect is accomplished at fairing separation by quick-disconnect connectors.

An air-conditioning inlet umbilical door on the fairing provides a controlled environment to the spacecraft and launch vehicle second stage while on the launch stand. A GN_2 purge system can be incorporated to provide continuous dry nitrogen to the spacecraft until liftoff.

Table 3-1. Typical Acoustic Blanket Configurations

Fairing	Location
2.9 m (9.5 ft) dia	Blankets extend from the nose cap to approximately Station 491. The blanket thicknesses are as follows: 38.1 mm (1.5 in.) in the nose section, 76.2 mm (3.0 in.) in the 2896-mm (114-in.) diameter section, and 38.1 mm (1.5 in.) in the upper portion of the 2438-mm (96-in.) diameter section.
3 m (10 ft) dia 8.8m (29 ft) length	The baseline configuration for acoustic blankets extends from the aft end of the boattail to station 208.37 in the nose section. These blankets are 76.2 mm (3 in.) thick throughout this region.
3 m (10 ft) dia 9.3m (30.4 ft) length	The baseline configuration for acoustic blankets extends from the aft end of the boattail to station 194.72 in the nose section. These blankets are 76.2 mm (3 in.) thick throughout this region.

- These configurations may be modified to meet mission-specific requirements.
- Blankets for the 9.5-ft Delta fairing are constructed of silicone-bonded heat-treated glass-fiber batt enclosed between two 0.076-mm (0.003-in.) conductive Teflon-impregnated fiberglass facesheets. The blankets are vented through a 5-micron stainless steel mesh filter, which controls particulate contamination to levels better than a Class 10,000 cleanroom environment.
- Blankets for the 10-ft Delta composite fairings are constructed of acoustic material. The blankets are vented through the interstage.
- Outgassing of the acoustic blankets meets the criteria of 1.0% maximum total weight loss and 0.10% maximum volatile condensable material for the 2.9m (9.5 ft) fairing.
- The acoustic blankets for the 3m (10 ft) composite fairings are being designed to meet the intent of the criteria of 1.0% maximum total weight loss and 0.10% maximum volatile condensible material.

Contamination of the spacecraft is minimized by factory cleaning prior to shipment to the field site. Special cleaning of the fairing in the field in a clean-room environment using "black light" is available upon request.

3.2 THE 2.9-m (9.5-ft) DIAMETER SPACECRAFT FAIRING

The 2.9-m (9.5-ft) Delta fairing (Figures 3-1 and 3-2) is an aluminum structure fabricated in two half-shells. These shells consist of a hemispherical nose cap, a biconic section, a cylindrical center section of 2896-mm (114-in.) diameter (the maximum diameter of the fairing), a 30-degree conical transition, and a cylindrical base section having the 2438-mm (96-in.) core vehicle diameter. The biconic section is a ring-stiffened monocoque structure, one-half of which is fiberglass covered with a removable aluminum foil lining to create an RF window. The cylindrical base section is an integrally stiffened isogrid structure, and the cylindrical center section has a skin-and-stringer-construction. The fairing has an overall length of 8488 mm (334.2 in.).

The half-shells are joined by a contamination-free linear piston/cylinder thrusting separation system that runs longitudinally the full length of the fairing. Two functionally redundant explosive bolt assemblies provide the structural continuity at the base ring of the fairing. Four functionally redundant explosive bolt assemblies (two each) provide circumferential structural continuity at the 30-degree transition section between the 2896-mm (114-in.) diameter section and the 2438-mm (96-in.) diameter section.

The fairing half-shells are jettisoned by actuation of the base and transition separation nuts and by the detonating fuse in the thrusting joint cylinder rail cavity. A bellows assembly within each cylinder rail retains the detonating-fuse gases to prevent contamination of the spacecraft during the fairing separation event.

Two 18-in by 18-in access doors for second-stage access are part of the baseline fairing configuration (Figure 3-2). To satisfy spacecraft requirements, additional removable doors of various sizes and locations can be provided to permit access to the spacecraft following fairing installation. It should be noted that the access doors will have acoustic blankets. The quantity and location of access doors must also be coordinated with the Delta Program Office.

The fiberglass biconic section can be made RF-transparent by removal of its aluminum foil lining. Location and size of the RF panels must be coordinated with the Delta Program Office.

Acoustic absorption blankets are provided within the fairing interior. The typical blanket configuration is described in Table 3-1. Blanket thermal characteristics are discussed in Section 4.2.2.

The allowable static spacecraft envelopes for existing attach fittings within the fairing are shown in Figures 3-3 and 3-4 and assume that the spacecraft stiffness recommended in Section 4.2.3.2 is maintained. Usable envelopes below the separation plane and local protuberances outside the envelopes presented require coordination and approval of the Delta Program Office.

3.3 THE 3-m (10-ft) DIAMETER SPACECRAFT FAIRING

The 3-m (10-ft) diameter fairing is available for spacecraft requiring a larger envelope. The fairing (Figure 3-5) is a composite sandwich structure which separates into bisectors. Each bisector is constructed in a single co-cured lay-up, eliminating the need for module-to-module manufacturing joints and intermediate ring stiffeners. The resulting

H30379.3

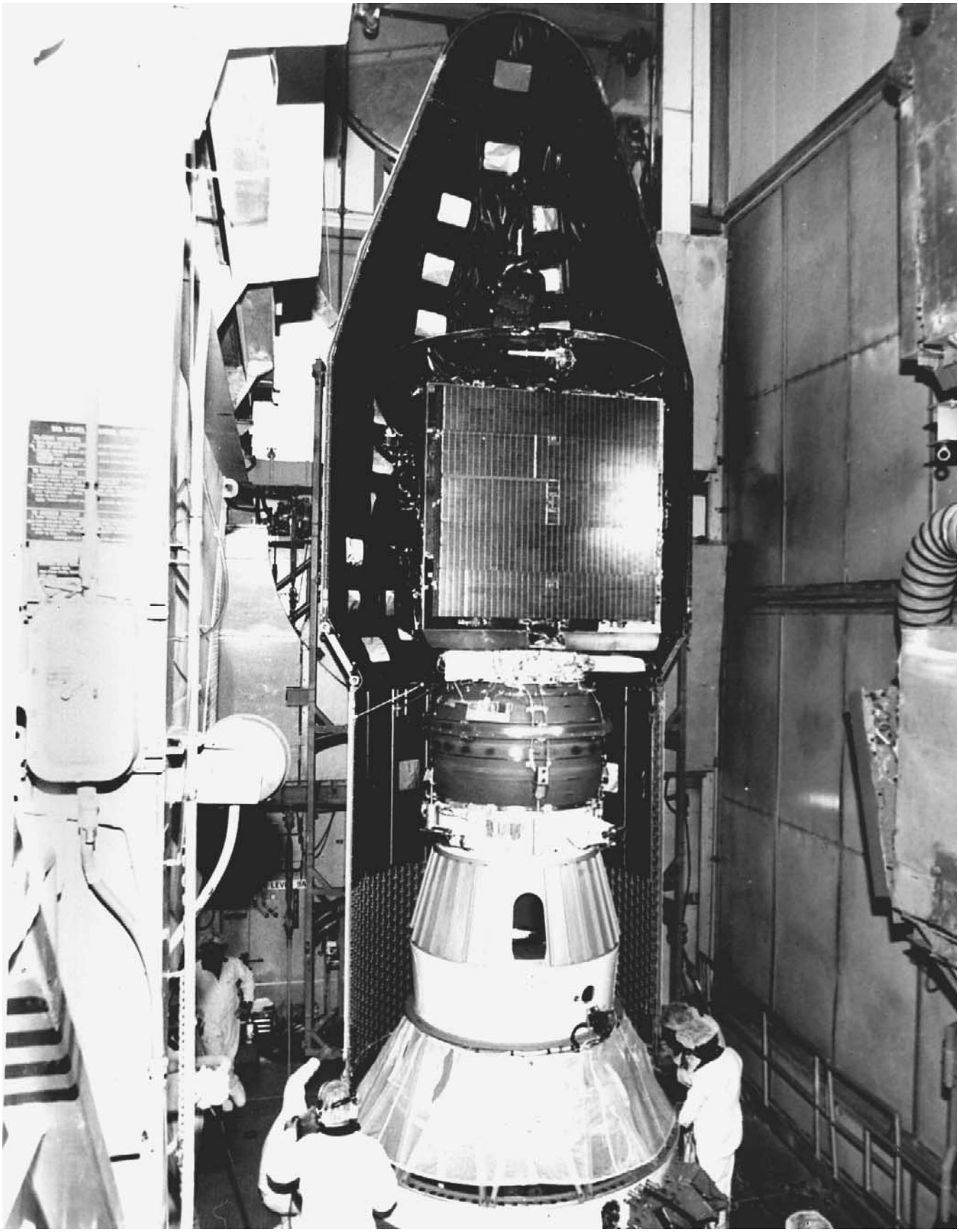

DAC 116907

Figure 3-1. Delta 2.9-m (9.5-ft) Payload Fairing

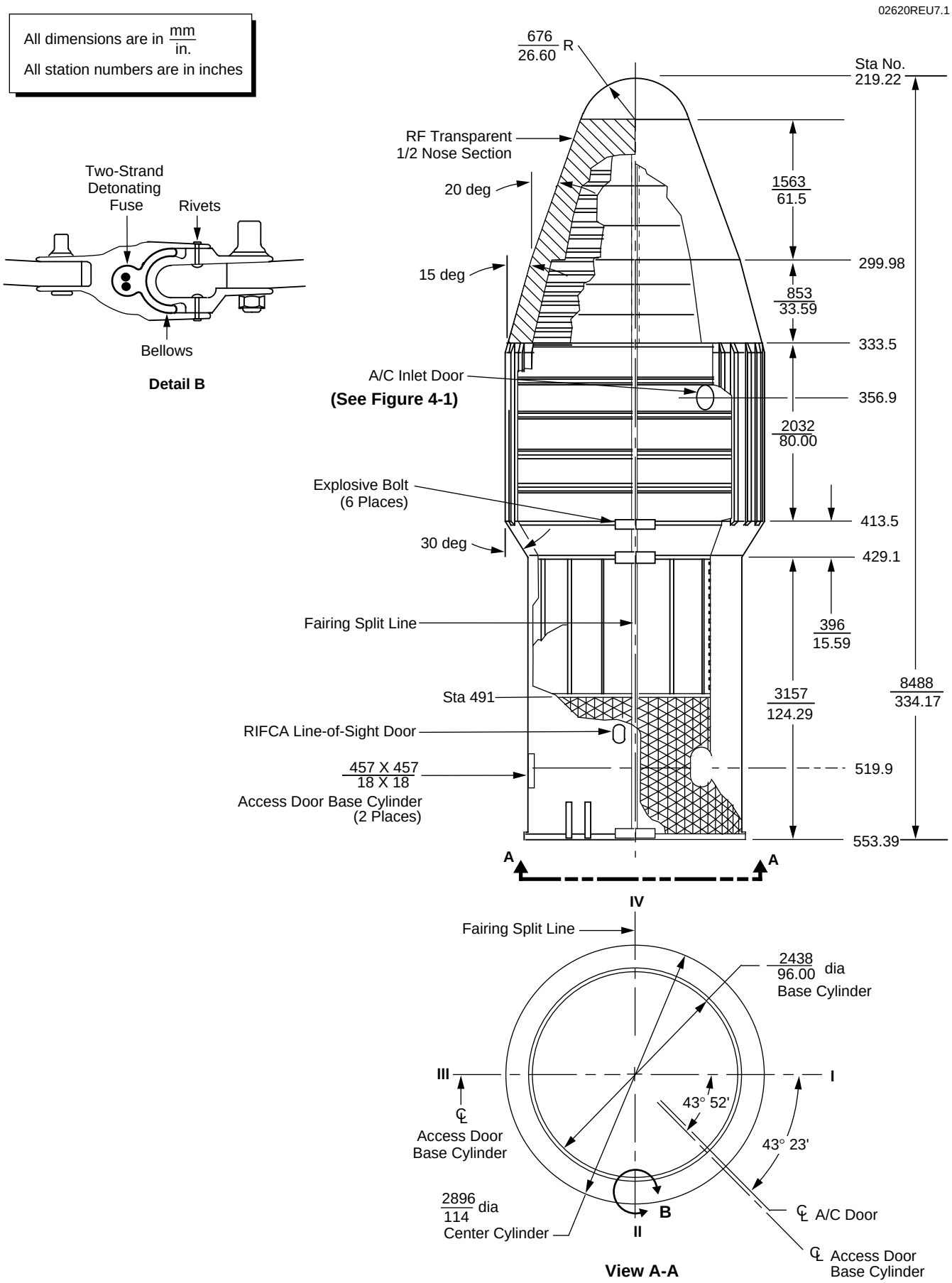

Figure 3-2. Profile, 2.9-m (9.5-ft) Diameter Fairing (Download Figure)

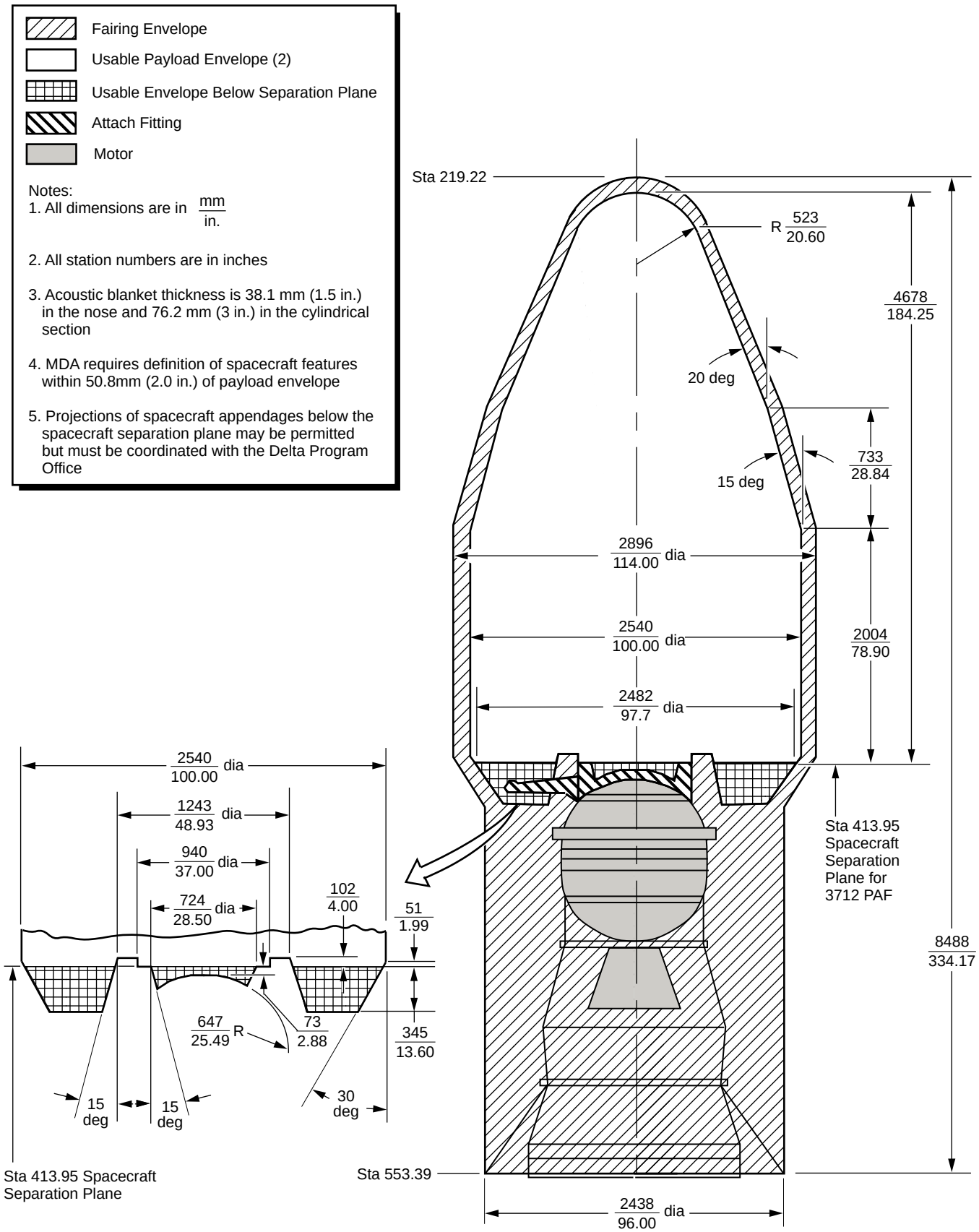

Figure 3-3. Spacecraft Envelope, 2-9-m (9.5-ft) Diameter Fairing, Three-Stage Configuration (3712 PAF)
(Download Figure)

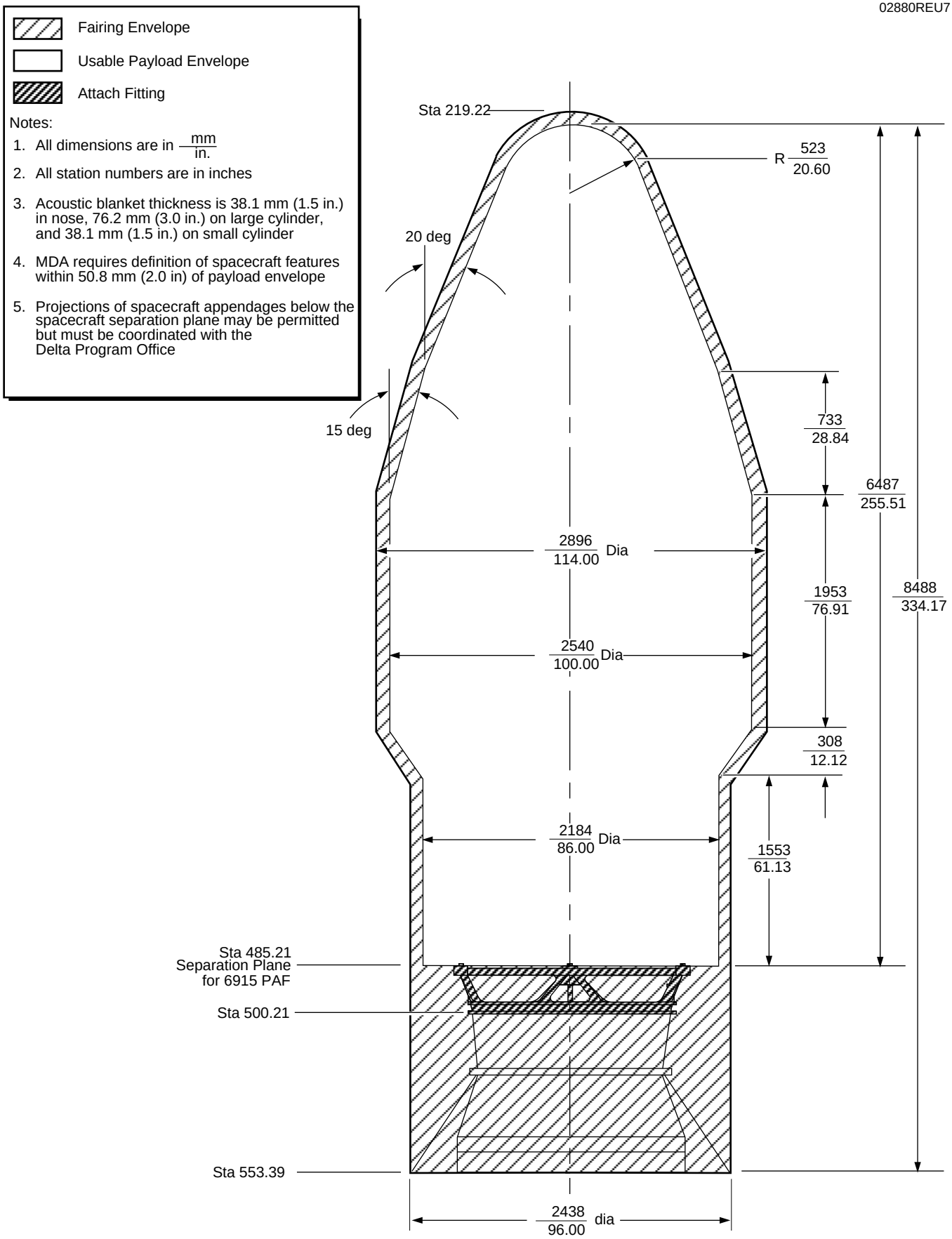

Figure 3-4. Spacecraft Envelope, 2.9-m (9.5-ft) Diameter, Two-Stage Configuration (6915 PAF) (Download Figure)

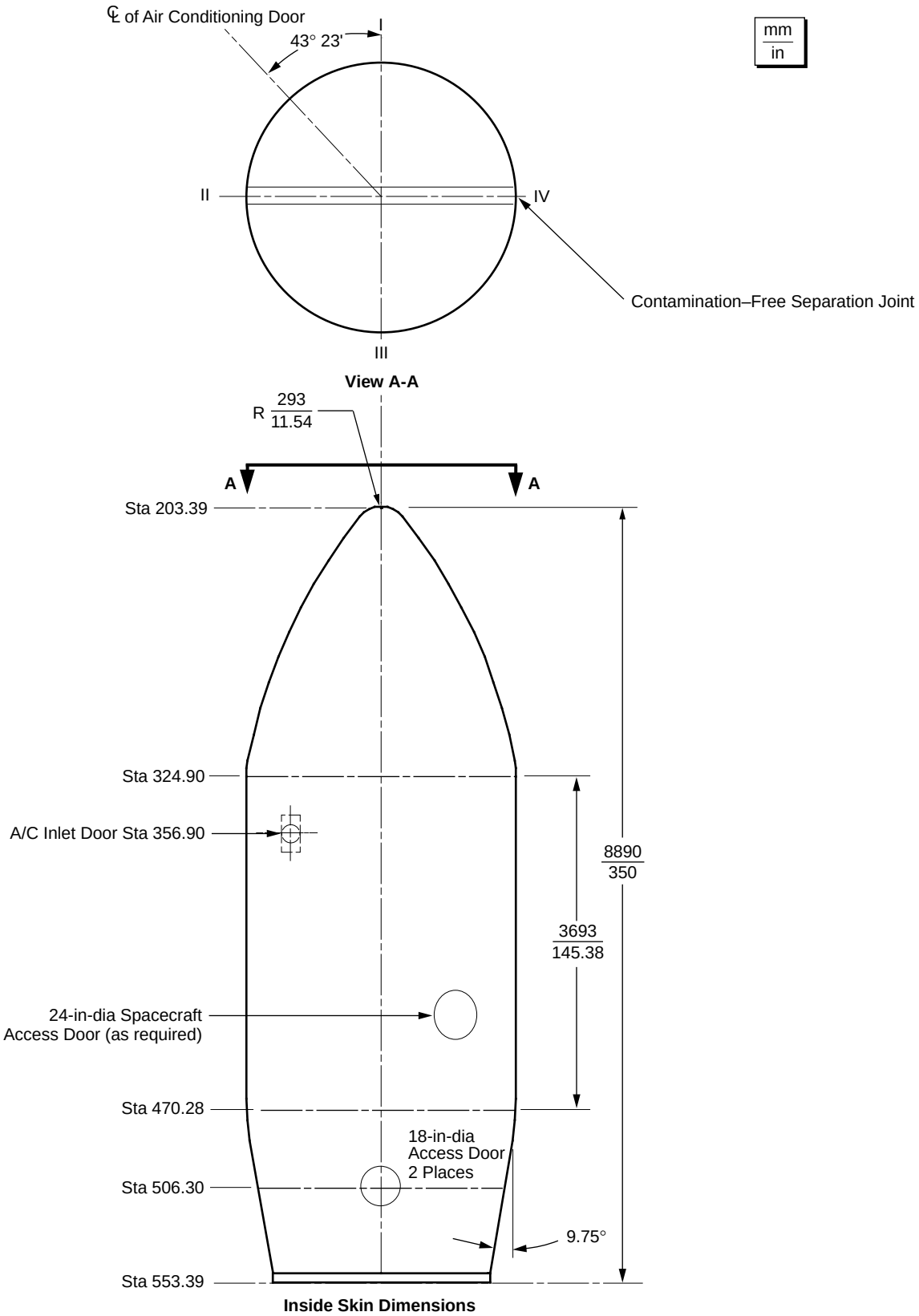

Figure 3-5. Profile, 3-m (10-ft) Composite Fairing (Download Figure)

smooth inside skin allows the flexibility to install mission-unique access doors almost anywhere in the cylindrical portion of the fairing. An RF window can be accommodated, similar to mission-unique access doors. All these requirements are to be coordinated with the Delta Program office.

The bisectors are joined by a contamination-free linear piston/cylinder thrusting separation system that runs longitudinally the full length of the fairing. Two functionally redundant explosive bolt assemblies provide the structural continuity at the base ring of the fairing.

The fairing bisectors are jettisoned by actuation of the base separation nuts, and by the detonating fuse in the thrusting joint cylinder rail cavity. A bellows assembly within each cylinder rail retains the detonating-fuse gases to prevent contamination of the spacecraft during the fairing separation event.

Two standard 18-in.-diameter access doors are part of the baseline fairing configuration for second-stage access (Figure 3-5). To satisfy spacecraft requirements, additional standard 24-in.-diameter removable doors can be provided in the fairing cylindrical section to permit access to the spacecraft following fairing installation. The quantity and location of additional access doors must be coordinated with the Delta Program Office.

Acoustic absorption blankets are provided on the fairing interior. Typical blanket configurations are described in Table 3-1.

The allowable static spacecraft envelopes within the fairing are shown in Figures 3-6 and 3-7 for the three- and two-stage configurations. These figures reflect envelopes for existing attach fittings and assume that the spacecraft stiffness recommended in Section 4.2.3.2 is maintained. Use of the portion of the envelope shown in Figure 3-6 that is below the separation plane, and local protuberances outside the envelopes presented, require coordination and approval of the Delta Program Office.

3.4 THE 3-m (10L-ft) DIAMETER SPACECRAFT FAIRING

The 3-m (10-ft) diameter 10L fairing is available for spacecraft requiring a longer envelope than the standard 3-m (10-ft) fairing described in Section 3.3. This fairing (Figure 3-8) is also a composite sandwich structure which separates into bisectors. The cylindrical section is 0.9 m (3 ft) longer than its counterpart discussed in Section 3.3. The overall length is 0.4 m (1.3 ft) longer than the standard 3-m (10-ft) fairing.

Other than the difference in length, the discussion in Section 3.3 also applies to the extended-length 10L fairing.

The allowable static spacecraft envelopes within the fairing are shown in Figures 3-9 and 3-10 for the three- and two-stage configurations. These figures reflect the envelopes for existing attach fittings, and it is assumed that the spacecraft stiffness recommended in Section 4.2.3.2 is maintained. Use of the portion of the envelope that is below the separation plane and local protruberances outside the envelopes require coordination and approval of the Delta Program Office.

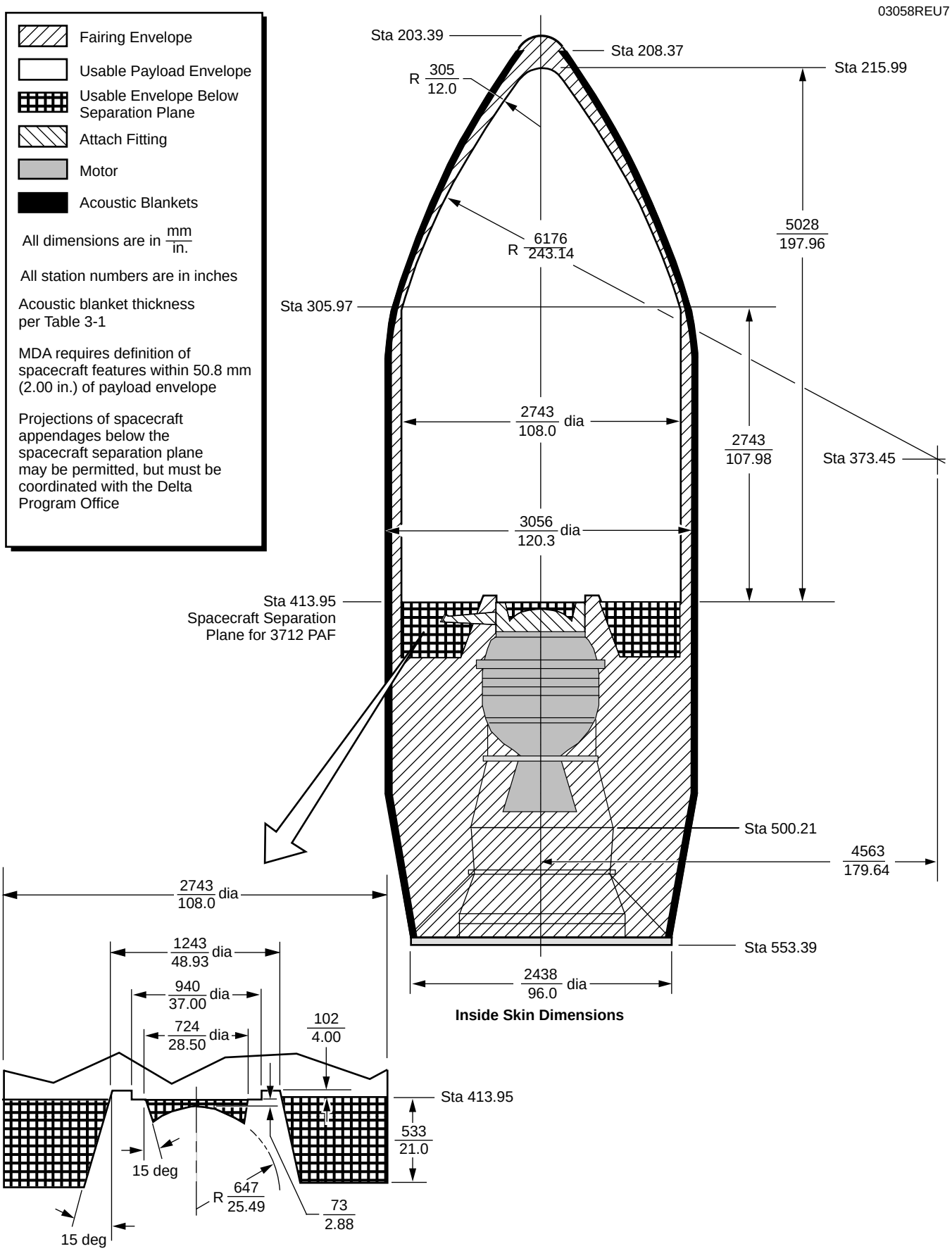

Figure 3-6. Spacecraft Envelope, 3-m (10 ft) Diameter Fairing, Three-Stage Configuration (3712 PAF)
(Download Figure)

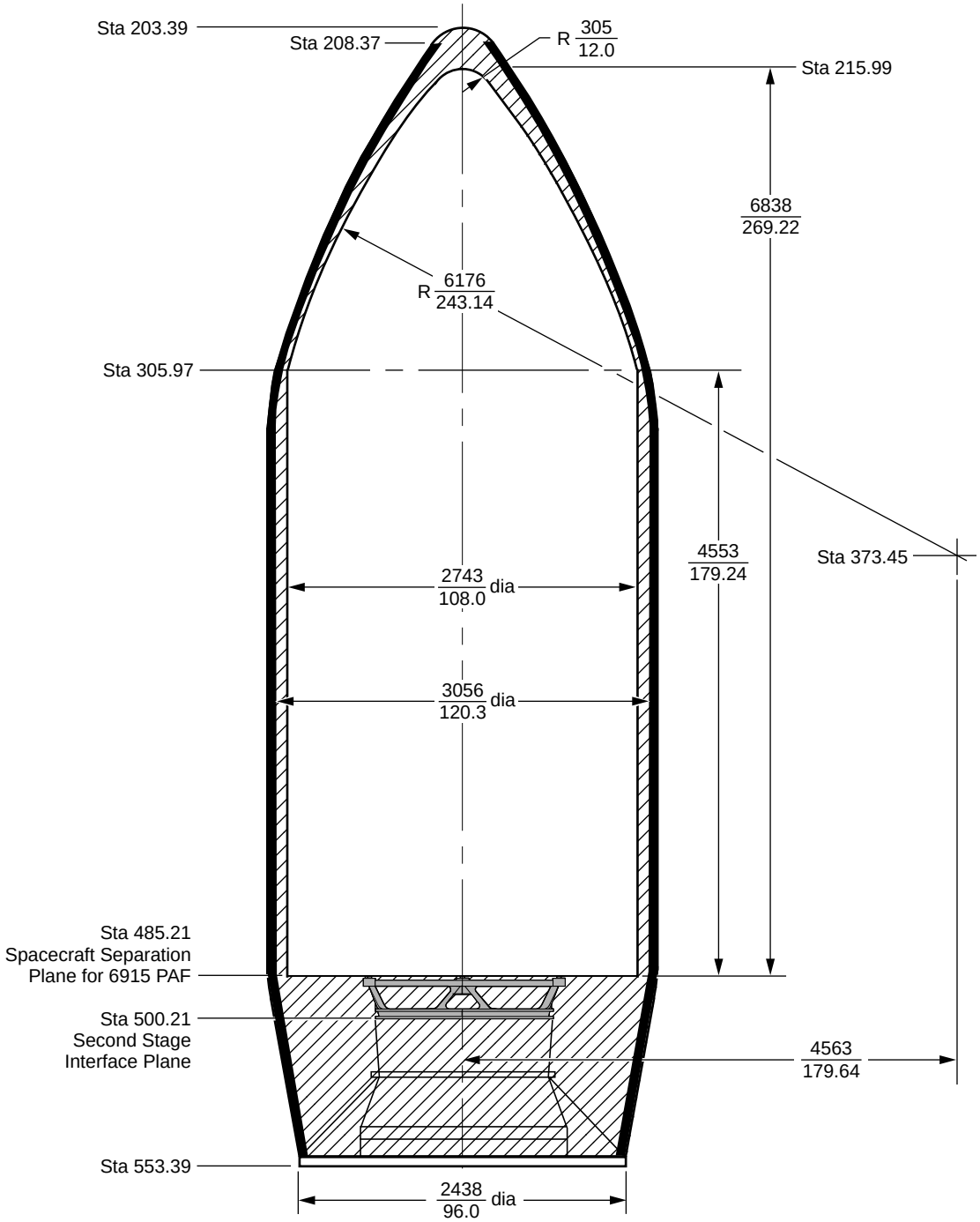

Inside Skin Dimensions

Fairing Envelope	Notes:
Usable Payload Envelope	1. All dimensions are in mm/in.
Attach Fitting	2. All station numbers are in inches
Acoustic Blankets	3. Acoustic blanket thickness per Table 3-1
	4. MDA requires definition of spacecraft features within 50.8 mm (2.00 in.) of payload envelope
	Projections of spacecraft appendages below the spacecraft separation plane may be permitted but must be coordinated with the Delta Program Office

Figure 3-7. Spacecraft Envelope, 3-m (10-ft) Diameter Fairing, Two-Stage Configuration (6915 PAF)
(Download Figure)

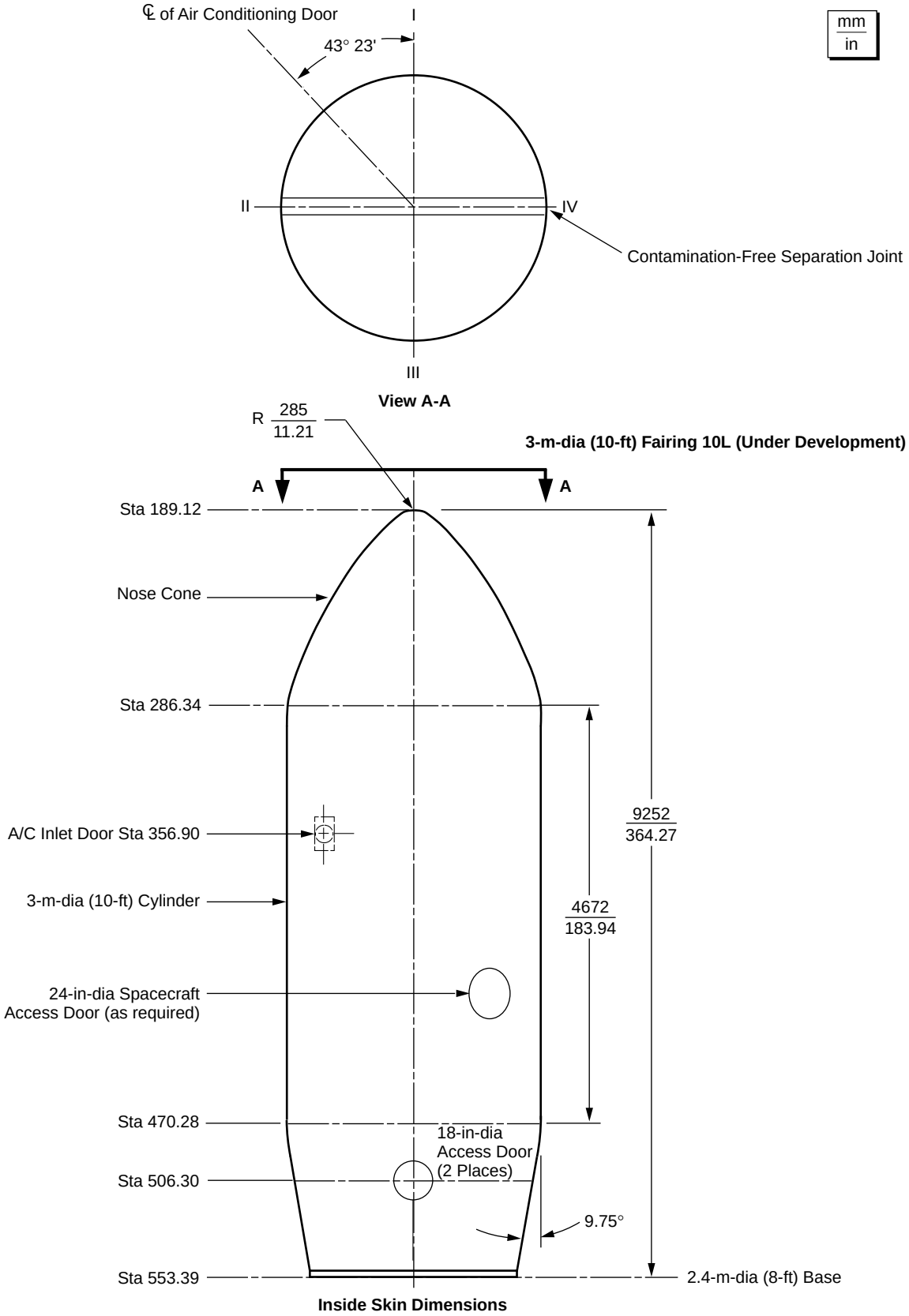

Figure 3-8. Profile, 3 m (10-ft) 10L Composite Fairing (Download Figure)

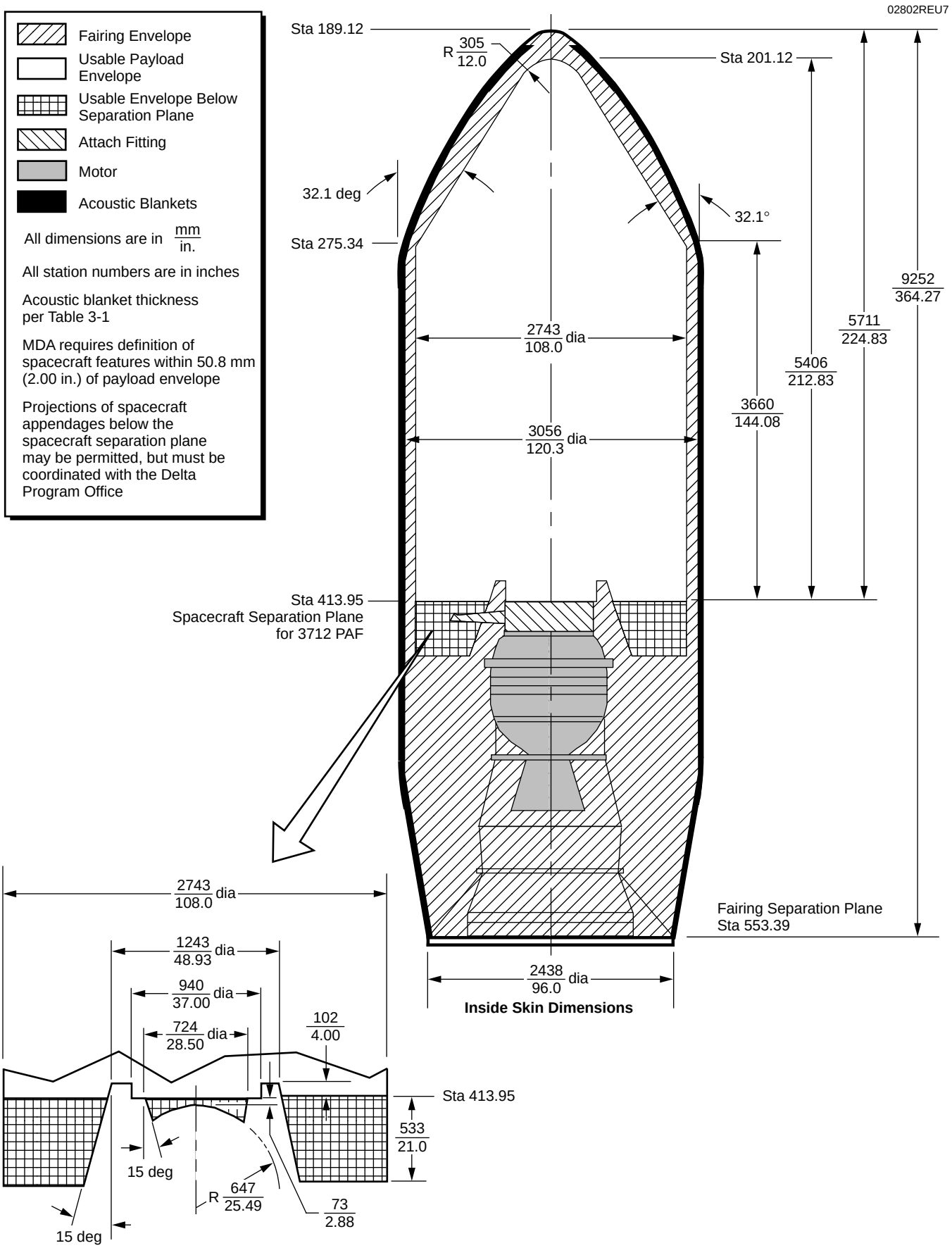

Figure 3-9. Spacecraft Envelope, 3-m (10-ft) Diameter 10L Fairing, Three-Stage Configuration (3712) PAF
(Download Figure)

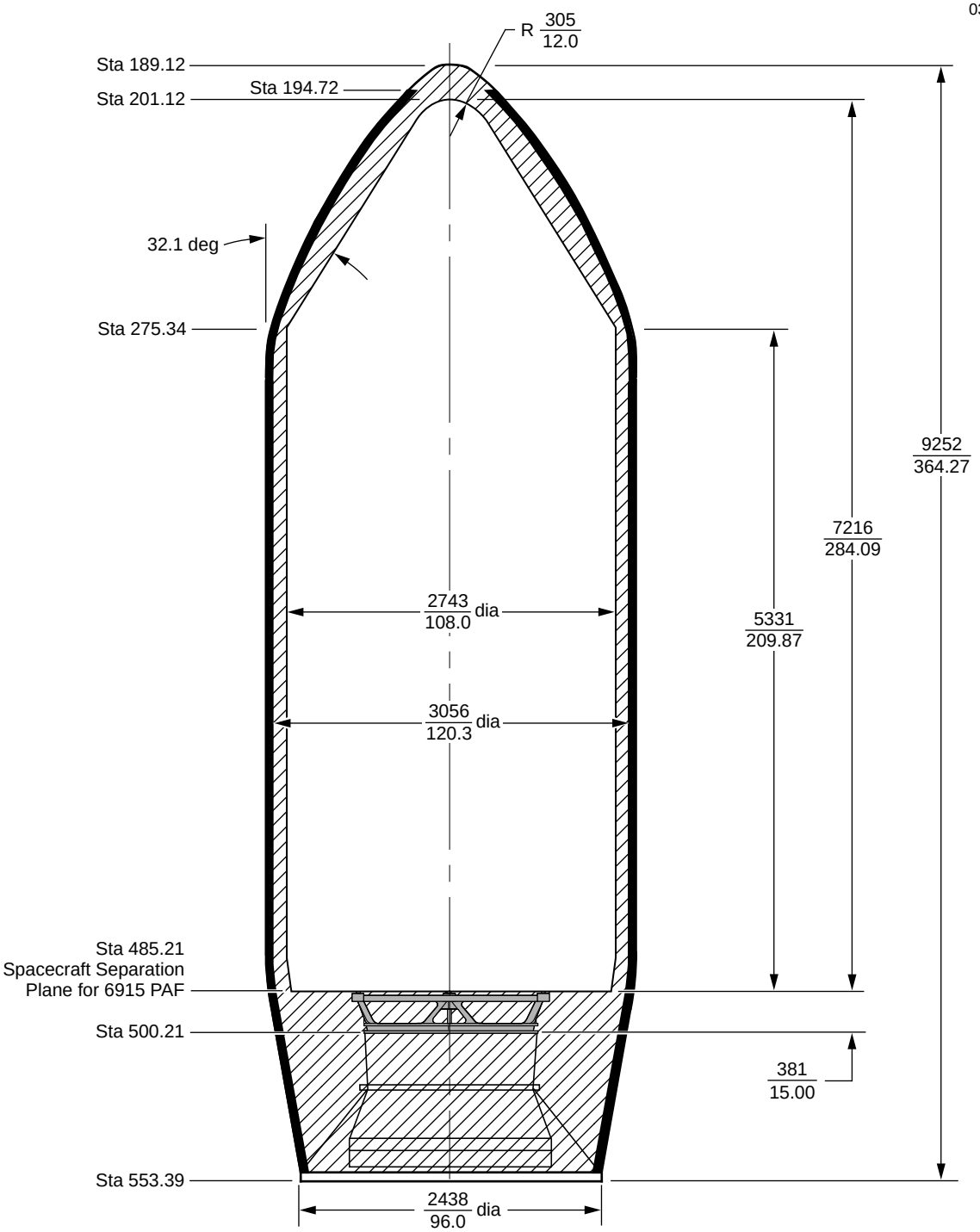

Fairing Envelope

Usable Payload Envelope

Attach Fitting

Acoustic Blankets

Notes:

1. All dimensions are in mm/in.
2. All station numbers are in inches
3. Acoustic blanket thickness per Table 3-1
4. MDA requires definition of spacecraft features within 50.8 mm (2.00 in.) of payload envelope

Projections of spacecraft appendages below the spacecraft separation plane may be permitted but must be coordinated with the Delta Program Office

Figure 3-10. Spacecraft Envelope, 3-m (10-ft) Diameter 10L Fairing, Two-Stage Configuration (6915) PAF
(Download Figure)

This section describes the launch vehicle environments to which the spacecraft is exposed during prelaunch activities and launch. Section 4.1 discusses prelaunch environments for processing facilities at both eastern and western ranges. Section 4.2 presents the Delta II launch and flight environments for the spacecraft.

4.1 PRELAUNCH ENVIRONMENTS

4.1.1 Spacecraft Air Conditioning

The environment that the spacecraft experiences during its processing is carefully controlled for temperature, relative humidity, and cleanliness. This includes the processing conducted before the spacecraft is mounted on the Delta II, while it is in the mobile service tower (MST) white room, and after it is encapsulated within the payload fairing.

Air conditioning is supplied to the spacecraft via an umbilical after the spacecraft and fairing are mated to the Delta II. If an environmental shroud is required around the spacecraft prior to fairing installation, it receives the same fairing air. The spacecraft air-distribution system (Figure 4-1) provides air at the required temperature, relative humidity, and flow rate. The spacecraft air-distribution system utilizes a diffuser on the inlet air-conditioning duct at the fairing interface. If required, a deflector can be installed on this inlet to direct the airflow away from sensitive spacecraft components. The air-conditioning umbilical is pulled away at liftoff by lanyard disconnects, and the access door on the fairing automatically closes. The air is supplied to the payload at a maximum flow rate of 1500 scfm. It flows downward around the spacecraft and is discharged below the second stage through vents in the interstage. At SLC-17, both pads have backup

H54869

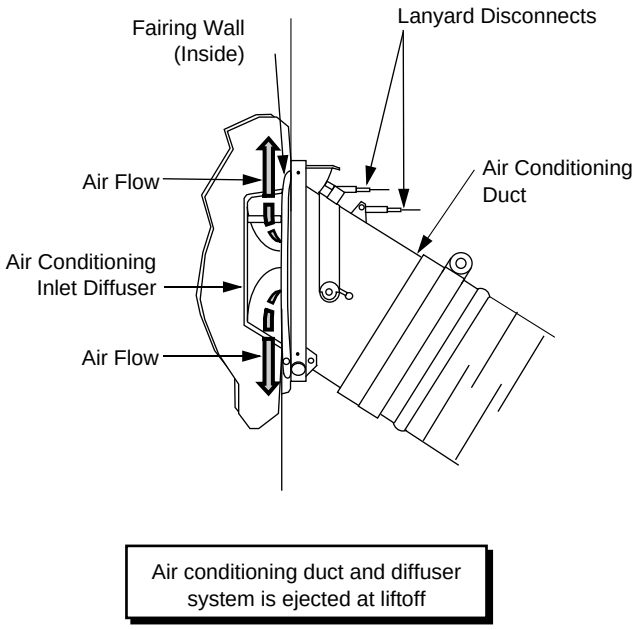

Figure 4-1. Payload Air Distribution System

systems for fairing air conditioning. At SLC-2, the fairing air conditioning system is redundant. At VAFB, emergency standby power can be arranged if requested by the spacecraft agency. A GN_2 purge line to the spacecraft can be accommodated through the air-conditioning duct after fairing installation. The air-conditioning duct is in the Quad I half of the fairing. Unique mission requirements or equipment should be coordinated with the Delta Program Office.

Various payload processing facilities are available at the launch site for use by the payload agency. Environmental control specifications for these facilities are listed in Tables 4-1 and 4-2 for eastern and western ranges, respectively. The facilities used would depend on spacecraft program requirements.

4.1.2 MST White Room

The white room is an environmentally controlled room located at the upper levels within the MST which has provisions for maintaining spacecraft

Table 4-1. Eastern Range Facility Environments

Location		Temperature	Relative humidity	Filtration
Building AE	Cleanroom complex	22.2 ± 1.76°C (72 ± 3°F)	55 ± 5%	Class 10,000[1]
Handling cans	Mobile	Note[2]	Not controlled[3]	Not controlled[3]
MST[5]	SLC-17A and SLC-17B white room (all doors closed)	23.9 ± 2.8°C (75 ± 5°F)	45 ± 5%	99.97% of all particles over 0.3 μm Class 100,000[5]
	Fairing and environmental shroud[7]	Any specified between 15.5 and 26.6 ± 2.8°C (60 and 80 ± 5°F)	50% max[6]	99.97% of all particles over 0.3 μm Class 100,000[5]
Astrotech	Buildings 1 and 2: airlock, high bays	23.9± 2.8°C (75 ± 5°F)	50 ± 5%	Class 100,000[5]
	Storage bays	21°C to 25.5°C (70°F to 78°F)	55% max	Commercial standard
SAEF 2	Airlock	21.7 ± 3.3°C (71 ± 6°F)	50% max	Class 100,000[5]
	High bay	21.7 ± 3.3°C (71 ± 6°F)	50% max	Class 100,000[5]
	Low bays	21.7 ± 3.3°C (71 ± 6°F)	50% max	Class 100,000[5]
	Test cells	21.7 ± 3.3°C (71 ± 6°F)	50% max	Class 100,000[5]
Cargo hazardous processing facility	Airlock	21 ± 2.8°C (70 ± 5°F)	30 to 50%	Class 100,000[5]
	Hazardous operations bay	21 ± 2.8°C (70 ± 5°F)	30 to 50%	Class 100,000[5]

Note: The facilities listed can only lower the outside humidity level. The facilities do not have the capability to raise outside humidity levels. These numbers are provided for planning purposes only. Specific values should be obtained from controlling agency.

(1) Class 1,000 obtainable with restrictions.
(2) Passive temperature control provided by operational constraints.
(3) Dry gaseous nitrogen purge per MIL-P-2740IC, Type 1, Grade A.
(4) A backup system exists for the MST white room air conditioning.
(5) FED-STD-209D.
(6) 50% relative humidity can be maintained at a temperature of 62°F (16.7°C). At higher temperatures, the relative humidity can be reduced by drying the conditioned air to a minimum specific humidity of 40 grains of moisture per 0.45 kg (1 lb) of dry air.
(7) Fairing air customer temperature requirements over 22.8°C (73°F) should be coordinated with the Delta Program Office.

M029, T007, 4/12/96, 11:41 AM

Table 4-2. Western Range Facility Environments

Location		Temperature	Relative humidity	Filtration
Building 836[1]	Spacecraft Lab 1	15.5 to 26.6 ± 1.2°C (60 to 80° ± 2°F)	TBD	Class 100,000[2]
	Spacecraft Lab 2	15.5 to 26.6 ± 1.2°C (60 to 80° ± 2°F)	TBD	Class 100,000[6]
	Hi-bay	Note[1]	TBD	N/A
Building 1610	Hazardous Processing Facility	17.7 to 32.2° ± 2.8°CC (65 to 80° ± 5°F)	40% to 50% ± 5%	Class 100,000
Handling can	Mobile	Note[3]	Not controlled [4]	Not controlled [4]
California Space Port	Payload Checkout Cells	23.9 ± 2.8°C(75 ± 5°)	30–50%	Class 100,000[6]
Astrotech	Payload Processing Rooms	15.5 to 26.6 ± 1.2°C[5] (60 to 80° ± 2°F)	35-60% ± 10[5]	Class 100,000[6] functional 10,000
MST	SLC-2 white room (all doors closed)	21.1 ± 2.8°C (70 ± 5°F)	30% to 50%	99.97% of all particles over 0.3 μm Class 100,000
	Fairing and environmental shroud[7]	Any specified between 15.5 and 23.9 ± 2.8°C (60 and 75 ± 5°F)	30% to 50%	99.97% of all particles over 0.3 μm Class 100,0000[6]

(1) These numbers are provided for preliminary planning purposes only. Payload users should contact NASA for specific capabilities of listed NASA facilities
(2) Class 10,000 with strict controls
(3) Passive temperature control provided by operational constraints
(4) Dry and gaseous nitrogen purge per MIL-P-27401C, Type 1, Grade A
(5) Controlled to customer requirement within range
(6) Fed-Std-209D
(7) Fairing air customer temperature requirements over 22.8°C (73°F) should be coordinated with the Delta Program Office

cleanliness. White room environments are listed in Table 4-1 for pads A and B at SLC-17 and in Table 4-2 for SLC-2 at VAFB. SLC-17 also has a personnel changeout room for each pad adjacent to the white room.

4.1.3 Radiation and Electromagnetic Environments

The Delta II transmits on several frequencies to provide launch vehicle telemetry and beacon signals to the appropriate range tracking stations. It also has uplink capability to onboard command receiver decoders (CRDs) for command destruct capability. Two S-band telemetry systems (one each on the second and third stage), two CRD systems on the second stage, and a C-band transponder (beacon) on the second stage are provided. The radiation characteristics of these systems are shown in Table 4-3. The RF systems are switched on prior to launch and remain on until stage separation and battery depletion. Spacecraft launch environment data such as low- and high-frequency vibration, acceleration transients, shock velocity increments, and spacecraft status may also be obtained from the vehicle telemetry system.

At the eastern and western ranges, the electromagnetic environment to which the satellite is exposed results from the operation of range radars and the launch vehicle transmitters and antennas. The maximum RF environment at the launch site is controlled through coordination with the range and with protective masking of radars. The launch pads are protected to an environment of 10 V/m at frequencies from 14 kHz to 40 GHz and 20 V/M in the C-band frequency of the range tracking radars.

An RF hazard analysis is performed to ensure that the satellite transmitters are compatible with the vehicle avionics and ordnance systems. An RF compatibility analysis is also performed to verify that the vehicle and satellite transmitter frequencies do not have interfering intermodulation products or image rejection problems.

Payload agencies should contact the Delta Program Office for induced RF environments.

Table 4-3. Delta II Transmitter Characteristics

	Second-stage T/M radiation characteristics	Third-stage T/M radiation characteristics	Second-stage C-band beacon characteristics
■ Transmitter			
• Nominal frequency	2241.5 MHz	2252.5 MHz	5765 MHz (transmit) 5690 MHz (receive)
• Power output	2.0 W min	5.0 W min	400 W min
• Modulation bandwidth	±160 kHz at 20 dB ±650 kHz at 60 dB	±70 kHz at 20 dB ±250 kHz at 60 dB	6 MHz at 6 dB
• Stability	+67 kHz max	+67 kHz max	3 MHz max
■ Antenna			
• Type	Cavity-backed slot	Circumferential belt	Transverse slot, dipole loaded
• Polarization	Essentially linear parallel to booster roll axis	Essentially linear parallel to booster roll axis	Left hand circular
■ Location˘	316 deg (looking aft) – Sta 559 143 deg (looking aft) – Sta 559	Belt at Sta 438	153 deg (looking aft) – Sta 559
• Pattern	Nearly omnidirectional	Nearly omnidirectional	Nearly omnidirectional
• Gain	+2.35 dB max	+3 dB max	+6 dB max

M029, T009, 7/31/95, 2:14 PM

4.1.4 Electrostatic Potential

During ground processing, the spacecraft must be equipped with an accessible ground attachment point to which a conventional alligator-clip ground strap can be attached. Preferably, the ground attachment point is located on or near the base of the spacecraft, at least 31.8 mm (1.25 in.) above the separation plane. The vehicle/spacecraft interface provides the conductive path for grounding the spacecraft to the launch vehicle. Therefore, dielectric coating should not be applied to the spacecraft interface. The electrical resistance of the spacecraft to PAF interface surfaces must be 0.0025 ohm or less and is verified during spacecraft to PAF mate. (Reference MIL-B-5087B, Class R.)

4.1.5 Contamination and Cleanliness

Cleanliness conditions provided for the Delta II payloads represent minimum cleanliness conditions available. The following guidelines and practices from prelaunch through spacecraft separation provide the minimum Class 100,000 cleanliness conditions (per Federal Standard 209B):

A. Precautions are taken during manufacture, assembly, test, and shipment to prevent contaminant accumulations in the Delta II upper-stage area, fairing, and PAF.

B. Encapsulation of the payload into the handling can is performed in a facility that is environmentally controlled to Class 100,000 conditions. All handling equipment is cleanroom compatible and is cleaned and inspected before it enters the facility. These environmentally controlled conditions are available for all remote encapsulation facilities and include SLC-17 and SLC-2. A handling can is used to transport the payload to the white room and provides environmental protection for the payload.

C. The fairing is cleaned using alcohol and then inspected for cleanliness prior to spacecraft encapsulation. Table 4-4 provides MDA STP0407 visible cleanliness (VC) levels with their NASA SN-C-0005 equivalency. It defines the cleanliness levels available to payload customers. The standard level for a mission is VC 2. Other cleanliness levels must be negotiated with the Delta Program Off

Table 4-4. Cleanliness level Definitions

MDA STP0407-0X	NASA SN-C-0005
VC 1	None
VC 2	VC Standard
VC 3	VC Highly Sensitive
VC 4	VC Sensitive + UV (Closest equivalent. MDA is more critical)
VC 5	VC Highly Sensitive
VC 6	VC Highly Sensitive + UV

M046 t1

Cleanliness Level Definitions

VC 1 - All surfaces shall be visibly free of all particulate and nonparticulate visible to the normal unaided (except for corrected vision) eye. Particulate is defined as matter of miniature size with observable length, width and thickness. Nonparticuate is film matter without definite dimension. Inspection operations shall be performed under normal shop lighting conditions at a maximum distance of 3 feet.

VC 2 - All surfaces shall be visibly free of all particulate and nonparticulate visible to the normal unaided (except for corrected vision) eye. Particulate is identified as matter of miniature size with observable length, width and thickness. Nonparticulate is a film matter without definite dimension. Inspection operations shall be performed at incident light levels of 50 foot candles and observation distances of 5 to 10 feet.

VC 3 - All surfaces shall be visibly free of all particulate and nonparticulate visible to the normal unaided (except for corrected vision) eye. Particu-

late is identified as matter of miniature size with observable length, width and thickness. Nonparticulate is a film matter without definite dimension. Incident light levels of 100 to 200 foot candles at observation distance of 18 inches or less.

VC 4 - All surfaces shall be visibly free of all particulate and nonparticulate visible to the normal unaided (except for corrected vision) eye. Particulate is identified as matter of miniature size with observable length, width and thickness. Nonparticulate is a film matter without definite dimension. This level requires no particle count. The source of incident light shall be a 300 watt drop light (explosion-proof) held at distance of 5 feet, maximum, from the local area of inspection. There shall be no hydrocarbon contamination on surfaces specifying VC 4 cleanliness.

VC 5 - All surfaces shall be visibly free of all particulate and nonparticulate visible to the normal unaided (except for corrected vision) eye. Particulate is identified as matter of miniature size with observable length, width and thickness. Nonparticulate is a film matter without definite dimension. Incident light levels of 100 to 200 foot candles at observation distance of 6 to 18 inches. Cleaning must be done in a Class 100,000 clean room or better.

VC 6 - All surfaces shall be visibly free of all particulate and nonparticulate visible to the normal unaided (except for corrected vision) eye. Particulate is identified as matter of miniature size with observable length, width and thickness. Nonparticulate is a film matter without definite dimension. Incident light levels of 100 to 200 foot candles at observation distance of 6 to 18 inches. Additional incident light requirements are 8 watts minimum of long wave ultraviolet light at 6 to 18 inches observation distance in a darkened work area. Protective eyeware may be used as required with UV lamps. Cleaning must be done in a Class 100,000 clean room or better.

D. Personnel and operational controls are employed during spacecraft encapsulation to maintain spacecraft cleanliness.

E. The payload agency may provide a protective barrier (bag) around the spacecraft prior to encapsulation in the handling can.

F. A contamination barrier (bag) is installed around the handling can immediately following encapsulation operations. An outer bag is installed for transportation. A nitrogen purge is provided to the handling can during transport.

G. A payload environmental shroud can be provided in the white room for the spacecraft prior to fairing installation. This shroud enables the spacecraft to be showered with class 10,000 fairing air.

4.2 LAUNCH AND FLIGHT ENVIRONMENTS

4.2.1 Fairing Internal Pressure Environment

As the Delta vehicle ascends through the atmosphere, the fairing is vented through a 64.5 cm^2 (10 $in.^2$) opening in the interstage and other leak paths in the vehicle. The expected extremes of internal pressure during ascent are presented in Figure 4-2 for the 2.9-m (9.5-ft) and 3-m (10-ft) fairings.

4.2.2 Thermal Environment

Prior to and during launch, the Delta II payload fairing and upper stages contribute to the thermal environment of the spacecraft.

4.2.2.1 Payload Fairing Thermal Environment. Upon PLF installation, air conditioning is provided at temperatures ranging from 12.8°C to 26.7°C (55°F to 80°F) depending on mission requirements. Variations in this range can be accommodated and should be coordinated with the Delta Program Office. Details of the air conditioning capability of the launch sites are provided in Section 4.1.

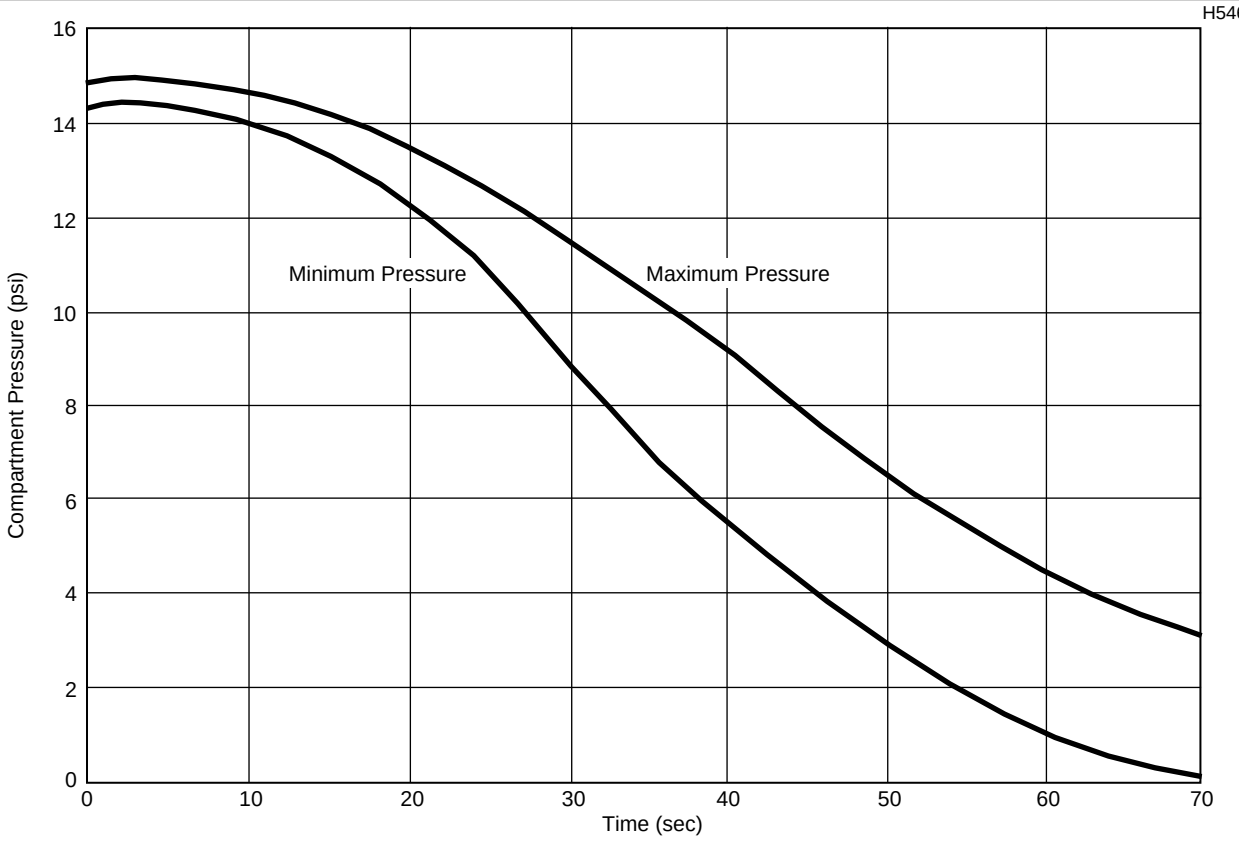

Figure 4-2. Delta II Payload Fairing Compartment Absolute Pressure Envelope

The ascent thermal environments of the Delta II fairing surfaces facing the spacecraft are shown in Figures 4-3 and 4-4. Typical maximum temperature histories of the fairing skin and the inboard facing surface of the acoustic blanket are shown for the 2.9-m (9.5-ft), and 3-m (10-ft) fairing configurations on the 792X vehicle. Temperatures are provided for both the PLF conical section and the cylindrical section facing the spacecraft. PLF inboard facing surface emissivity values are also provided. All temperature histories presented are based on depressed versions of the trajectory (worst case).

The acoustic blankets provide a relatively cool radiation environment by effectively shielding the spacecraft from the ascent heating in blanketed areas. Figures 4-3 and 4-4 depict the areas of the various Delta II fairings which are typically blanketed. There may be slight variations in blanket coverage areas based on mission unique requirements. Inclusion of an RF window in the 9.5-ft PLF conical section results in a local increase in acoustic blanket temperature inboard of the RF window as shown in Figure 4-3.

The fairing skin temperature is representative of the radiation environment to the spacecraft in unblanketed areas such as the air conditioning inlet door, unblanketed access doors and blanket cutout regions. Maximum skin temperatures are shown in Figures 4-3 and 4-4.

The 9.5-ft fairing frame temperatures are somewhat less severe than skin temperatures. Information regarding frame locations, exposure, and temperature history is available on request.

Unless otherwise requested, jettison of the fairing will occur shortly after the theoretical free

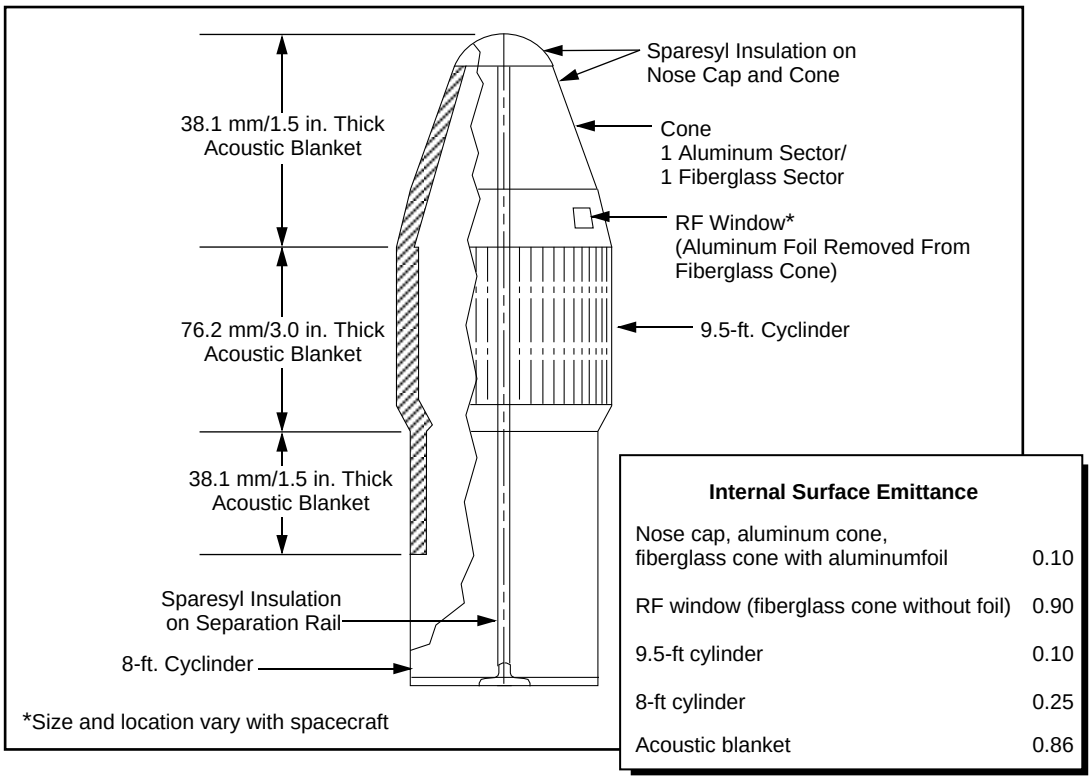

Internal Surface Emittance

Nose cap, aluminum cone, fiberglass cone with aluminumfoil	0.10
RF window (fiberglass cone without foil)	0.90
9.5-ft cylinder	0.10
8-ft cylinder	0.25
Acoustic blanket	0.86

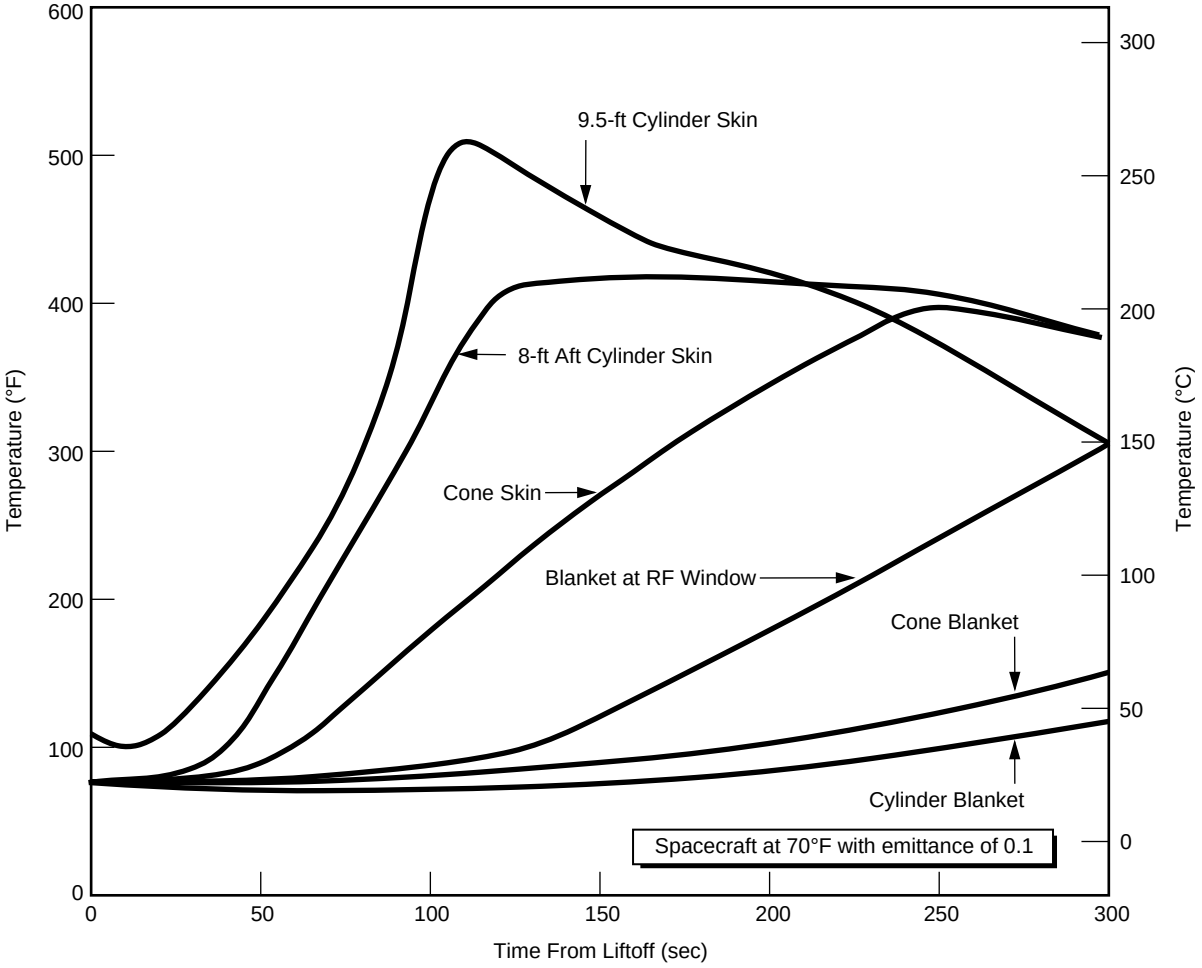

Figure 4-3. Predicted Maximum Internal Wall Temperatures and Internal Surface Emittance (9.5-ft Fairing)

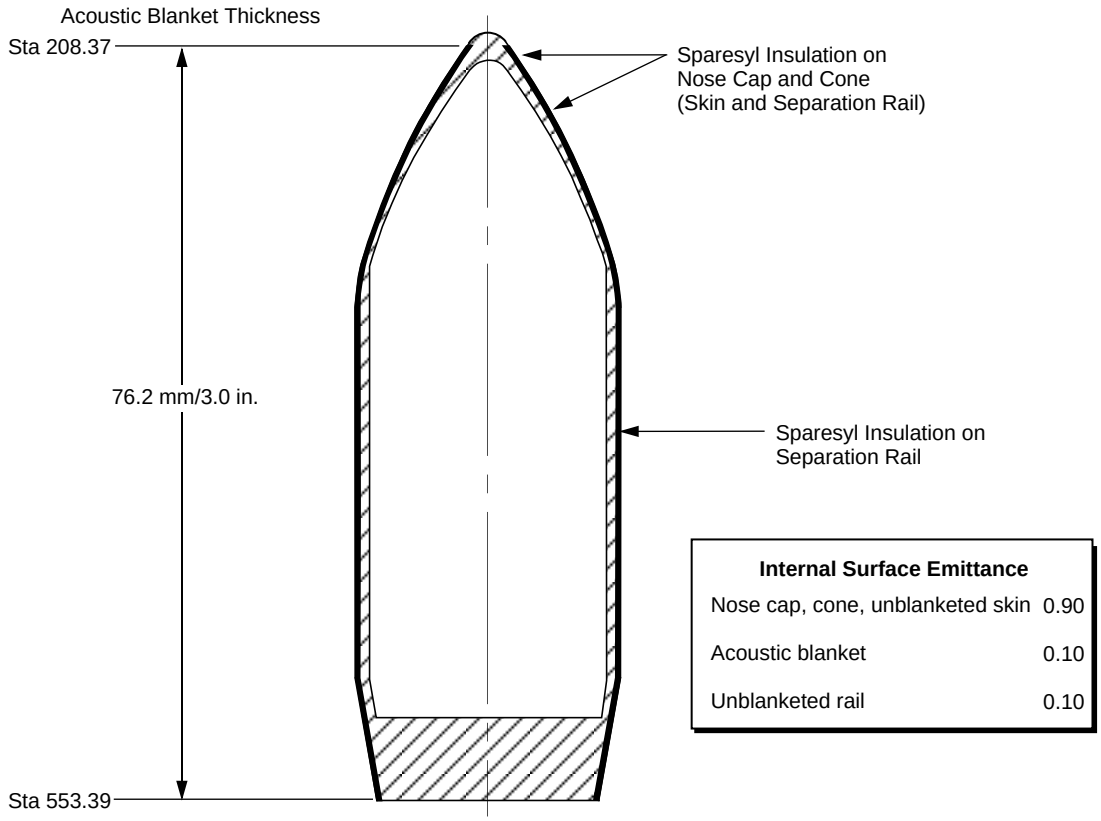

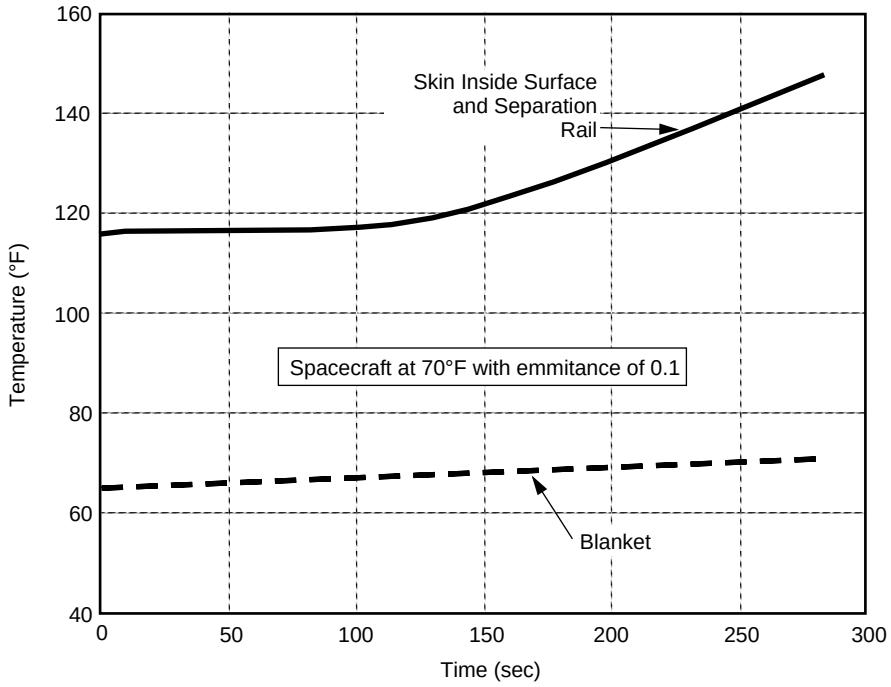

Figure 4-4 Predicted Maximum Internal Wall Temperatures and Internal Surface Emittances (10-ft Fairing)

molecular heating for a flat plate normal to the free stream drops below 0.1 Btu/ft^2-sec (1135 W/m^2) based on the 1962 US Standard Atmosphere.

4.2.2.2 On-Orbit Thermal Environment. During coast periods, the Delta II can be oriented to meet specific sun angle requirements. A slow roll during a long coast period can also be used to moderate orbital heating and cooling. The Delta II roll rate for thermal control is typically between 1 and 3 deg/sec.

4.2.2.3 Spacecraft/Launch Vehicle Interface. The spacecraft is required to provide interface temperatures for the injection period assuming an adiabatic interface. MDA will provide launch vehicle interface temperatures also assuming an adiabatic interface.

4.2.2.4 Upper Stage Induced Thermal Environments. The spacecraft receives radiant heat energy from the Delta third stage spin rockets during burn and from the third stage motor during and after burn. Because of the high temperature of the exhaust gases, the radiation from the plumes may be significant if there are sensitive components located at the spacecraft base.

The third-stage spin rocket plumes subject the spacecraft to a maximum heat flux of 2840 W/m^2 (0.25 Btu/ft^2-sec) at the spacecraft/third stage separation plane. This heat flux is a pulse of 1-sec duration.

The third-stage motor plume subjects the spacecraft to maximum heat flux of 2044 W/m^2 (0.18 Btu/ft^2-sec). The motor burns for approximately 86 sec. Plume maximum heat flux is plotted versus radial distance in Figure 4-5. The variation of the heat flux with time during the third-stage burn is shown in Figure 4-6.

After third-stage motor burnout, the titanium motor case temperature rises rapidly, as shown in

H54472.1

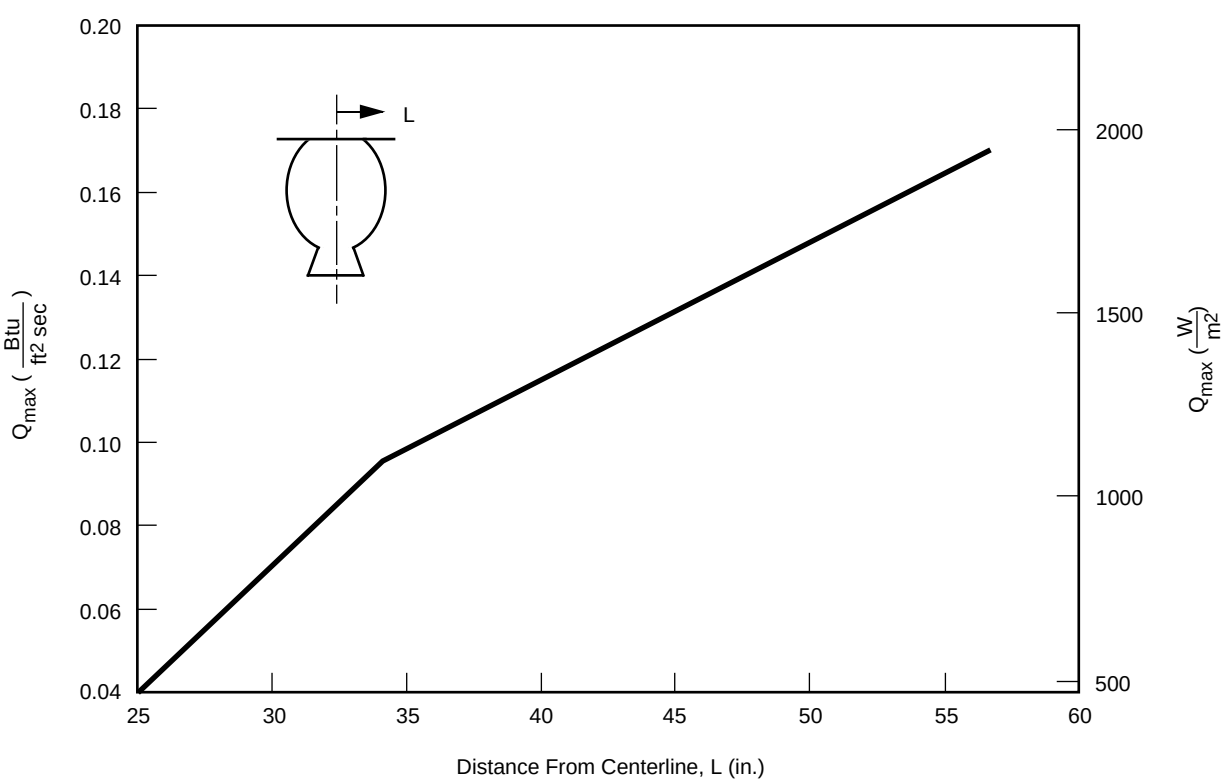

Figure 4-5. Predicted Star 48B Plume Radiation at the Spacecraft Separation Plane Versus Radial Distance

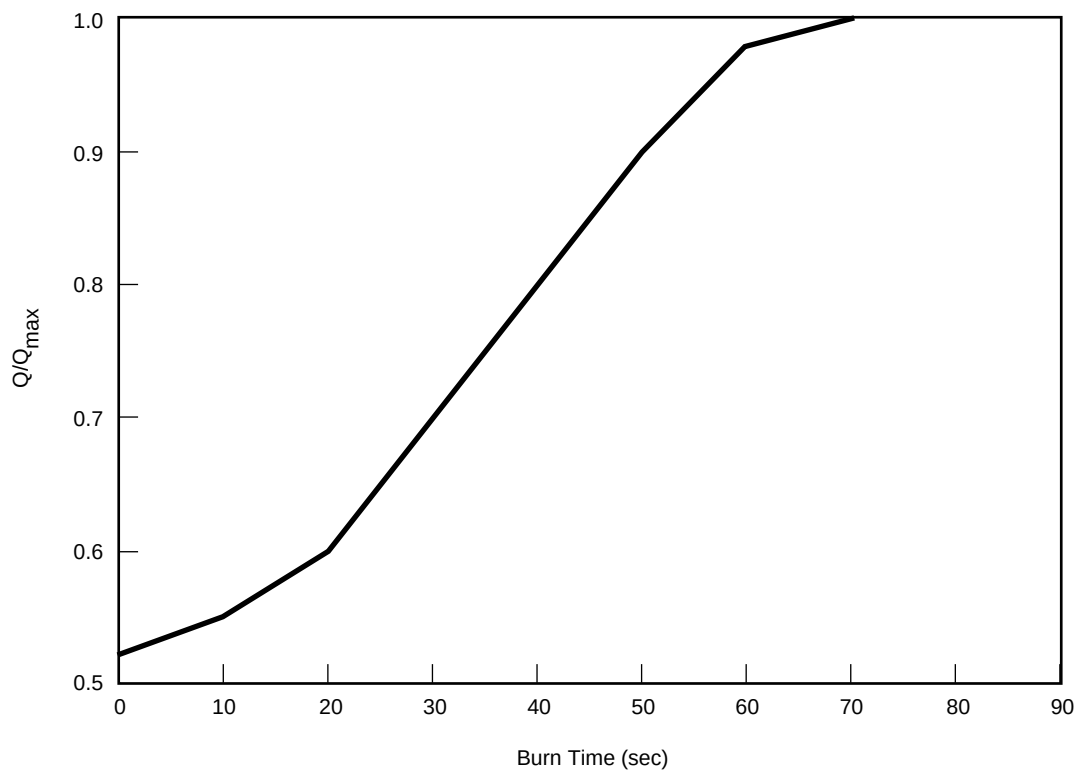

Figure 4-6. Predicted Star 48B Plume Radiation at the Spacecraft Separation Plane Versus Burn Time

Figure 4-7. By 200 sec after motor ignition (typical spacecraft separation time), the case temperature reaches 299°C (570°F). Case temperature eventually reaches a peak of 343°C (650°F) at approximately 265 sec after motor ignition. The temperature history shown is the maximum expected along the forward portion of the motor case and corresponds to a 7925 Delta II class spacecraft weight greater than 820 kg (1800 lbs), which yields approximately 10 pounds of slag. For lighter spacecraft weights [less than 820 kg (1800 lbs)], the case temperature peaks at approximately 427°C (800°F) and produces approximately 16 pounds of slag due to the higher acceleration. Mission users should contact the Delta Program Office for greater detail. The external surface emissivity of the titanium motor case is 0.34.

The hydrazine thruster plume of the third-stage nutation control system (NCS) does not introduce any significant heating to the spacecraft interface plane. Any spacecraft instruments which protrude below the interface plane should be evaluated for proximity to the NCS thruster. Information regarding this plume can be provided as necessary.

4.2.3 Flight Dynamic Environment

The acoustic, sinusoidal, and shock environments provided in Sections 4.2.3.3 through 4.2.3.5 are based on maximum flight levels for a 95th percentile statistical estimate.

4.2.3.1 Steady-State Acceleration. For the Delta 7320 and 7920 vehicles, the maximum axial acceleration occurs at the end of the first-stage burn (MECO). For a three-stage Delta vehicle, the maximum steady-state acceleration occurs at the end of third-stage flight for payloads up to 885 kg (1950 lb). Above this weight the maximum acceleration occurs at MECO. A plot of steady-state

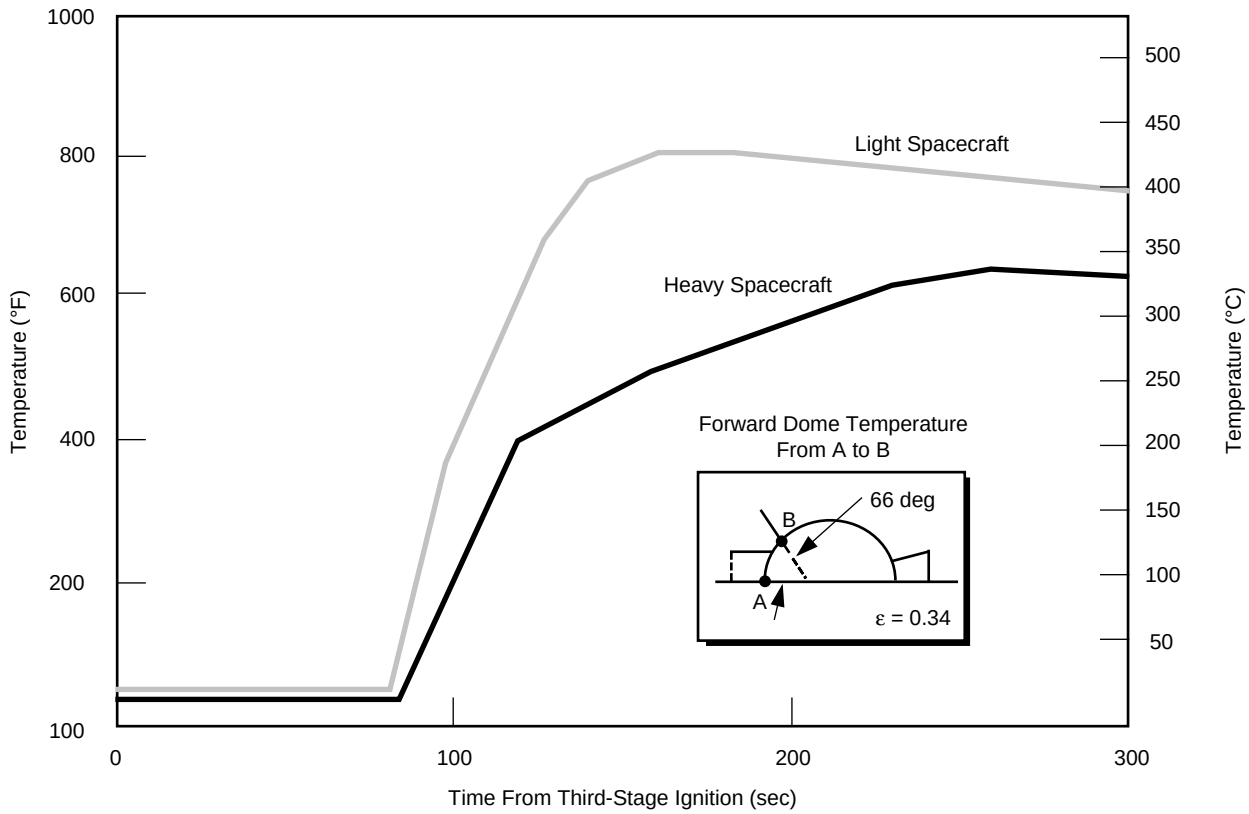

Figure 4-7. Predicted Star 48B Motor Case Soakback Temperature

axial acceleration at MECO versus payload weight is shown in Figure 4-8 and is respresentative for the acceleration at MECO for the 2.9- and 3-m (9.5 and 10 ft) fairings. Steady-state axial acceleration versus spacecraft weight at third-stage motor burnout is shown in Figure 4-9.

4.2.3.2 Combined Loads. Dynamic excitations, which occur predominantly during liftoff and transonic periods of Delta flight, are superimposed on steady-state accelerations to produce combined accelerations that must be used in the spacecraft structural design. The combined spacecraft accelerations are a function of launch vehicle characteristics as well as spacecraft dynamic characteristics and mass properties. To avoid dynamic coupling between low-frequency vehicle and spacecraft modes, the stiffness of the spacecraft structure should produce fundamental frequencies above 35 Hz in the thrust axis and 15 Hz (12 Hz for a two-stage spacecraft) in the lateral axis for a spacecraft hard-mounted at the spacecraft separation plane (without PAF and separation clamp). In addition, secondary structure mode frequencies should be above 35 Hz to avoid undesirable coupling with launch vehicle modes and/or large fairing-to-spacecraft relative dynamic deflections. The spacecraft design limit load factors presented in Table 4-5 are applicable for spacecraft meeting the above fundamental frequency criteria. For very flexible spacecraft, the combined accelerations and subsequent design limit-load factors could be higher than shown, and the user should consult the Delta Program Office so that appropriate analyses can be performed to better define loading conditions.

4.2.3.3 Acoustic Environment. The maximum acoustic environment for the spacecraft occurs during liftoff and transonic flight, and the duration of the maximum environment is less than 10 seconds.

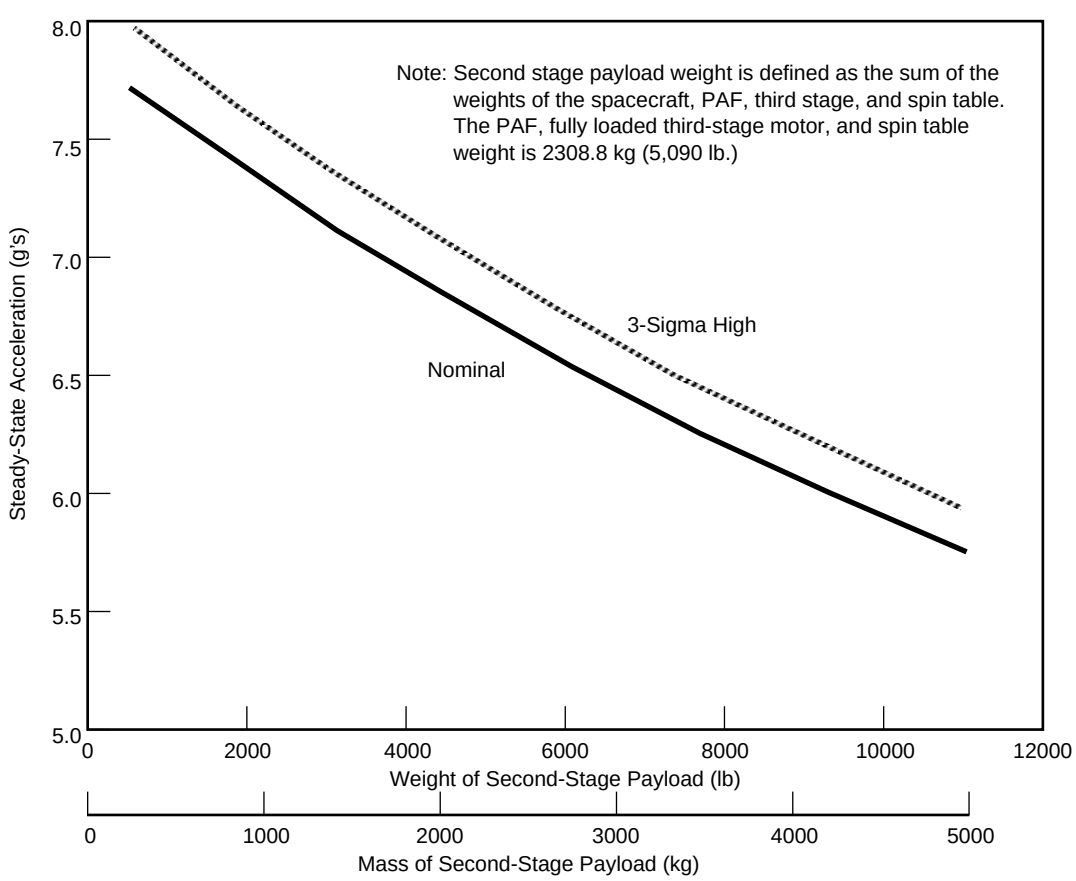

Figure 4-8. Axial Steady-State Acceleration at MECO Versus Second-Stage Payload Weight

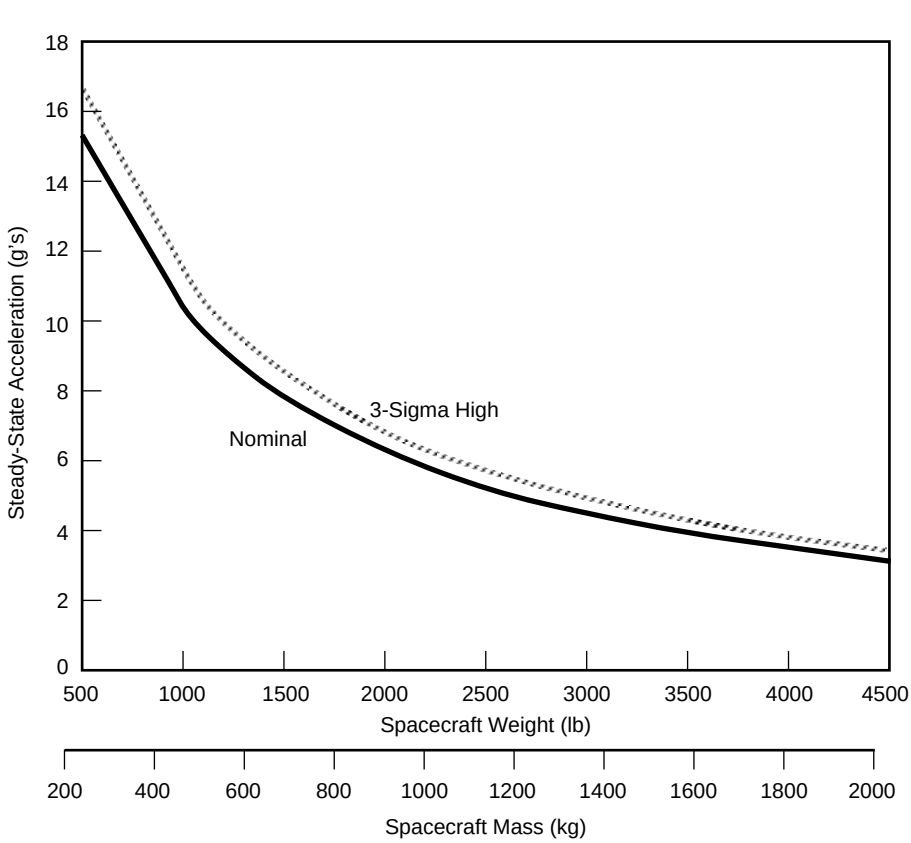

Figure 4-9. Axial Steady-State Acceleration at Third-Stage Burnout

Table 4-5. Spacecraft CG Limit-Load Factors (g)

	Liftoff/Transonic		
Axis	**Two-Stage**	**Three-Stage**	**MECO**
Lateral	±2.0 ±2.5(1)	±2.5 ±3.0(1)	±0.1
Thrust	+2.8/-0.2(2)	+2.8/-0.2(2)	+6.2±0.6(3)

(1) Lateral load factor to provide correct bending moment at spacecraft separation plane.
(2) Plus indicates compression load and minus indicates tension load.
(3) Axial load factor at MECO consists of a static component which is a function of spacecraft weight (Fig 4-8) and a dynamic component at a frequency of ~17-18 Hz. The 6.2-g static value shown is based on a spacecraft weight of 1885 kg (4155 lb) for a three-stage mission.

M029, T006.2, 8/14/95, 2:14 PM

The spacecraft acoustic environment is a function of the configuration of the launch vehicle, the fairing, and the fairing acoustic blankets. Section 3 defines the fairing blanket configurations. Table 4-6 identifies the figures that define the spacecraft acoustic environment for several versions of the Delta II. The maximum flight level spacecraft acoustic environments for blanketed region for the Delta 7900 series launch vehicle configurations are defined in Figures 4-10 and 4-11 based on typical

Table 4-6. Spacecraft Acoustic Environment Figure Reference

Delta II launch vehicle configuration	Mission type	Fairing configuration	Fairing acoustic blanket configuration	Spacecraft acoustic environment
7925 7920 7325 7320	2-stage and 3-stage	9.5-ft diameter	3-in. configuration	See Figure 4-10
7925-10 7920-10 7325-10 7320-10	2-stage and 3-stage	10-ft diameter	3-in. configuration	See Figure 4-11

M046, t4-5

H55384.4

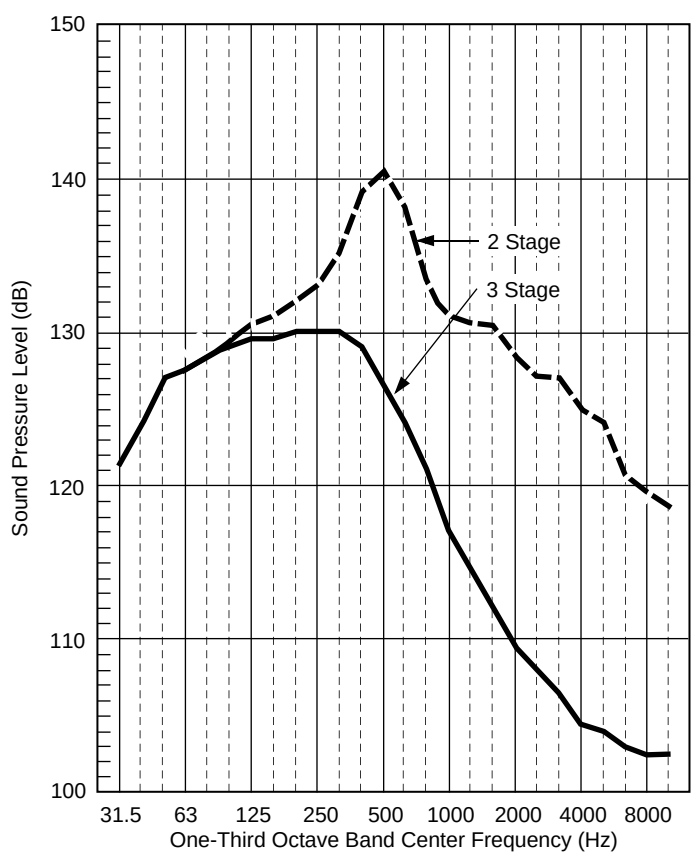

Maximum Flight Levels (dB)		
One-Third Octave Center Frequency (Hz)	3-Stage Mission	2-Stage Mission
31.5	121.5	121.5
40	124	124
50	127	127
63	127.5	127.5
80	128.5	128.5
100	129	129.5
125	129.5	130.5
160	129.5	131
200	130	132
250	130	133
315	130	135
400	129	139
500	126.5	140.5
630	124	138
800	121	133
1000	117	131
1250	114.5	130.5
1600	112	130.5
2000	109.5	128.5
2500	108	127
3150	106.5	127
4000	104.5	125
5000	104	124
6300	103	120.5
8000	102.5	119.5
10,000	102.5	118.5
OASPL	139.8	146.6
Duration	5 seconds	10 seconds

Figure 4-10. Predicted Delta II 7920 and 7925 9.5-ft Fairing Spacecraft Acoustic Environment

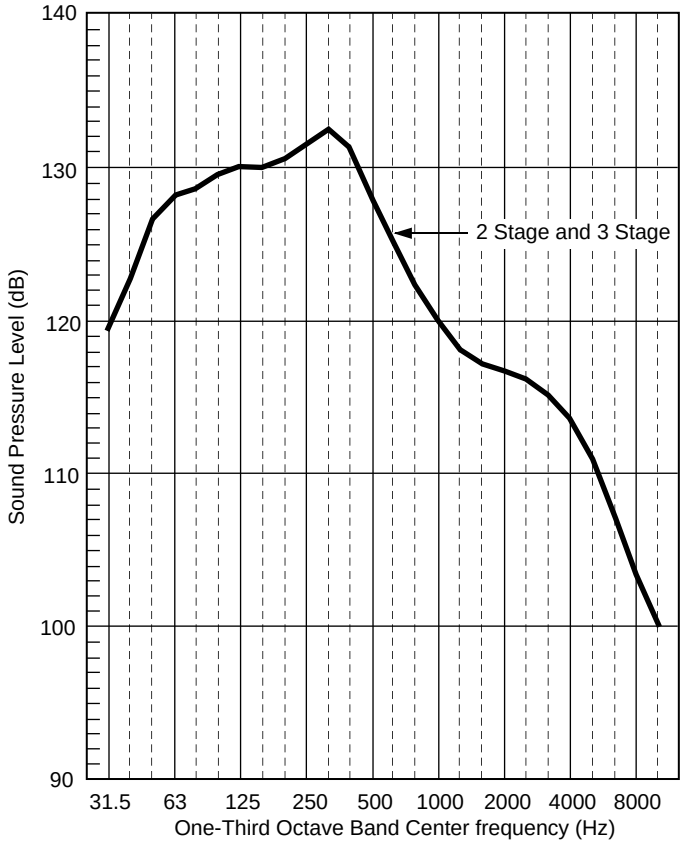

H55385.1

Maxunum Flight Levels (dB)	
One-Third Octave Center Frequency (Hz)	3.0-in. Blanket Configuration (dB)
31.5	119.5
40	122.5
50	126.5
63	128
80	128.5
100	129.5
125	130
160	130
200	130.5
250	131.5
315	132.5
400	131.5
500	128
630	125
800	122
1000	120
1250	118
1600	117
2000	116.5
2500	116
3150	115
4000	113.5
5000	111
6300	107
8000	103
10,000	100
OASPL	140.8
Duration	5 seconds

Figure 4-11. Predicted Delta II 7920 and 7925 10-ft Fairing Spacecraft Acoustic Environment

spacecraft with payload bay fills up to 60%. Launch vehicles with payload bay fills above 80% will experience approximately 1 1/2 dB higher levels. The overall sound pressure level (OASPL) for each acoustic environment is also shown in the figures. The maximum spacecraft acoustic environments for the Delta 7300 series launch vehicle configurations are 2.0 dB lower than those for the 7900 series vehicle because fewer GEM solid motors are ignited at liftoff. The acoustic environment produces the dominant high-frequency random vibration responses in the spacecraft, and a properly performed acoustic test is the best simulation of the acoustically-induced random vibration environment (See Section 4.2.4.2). There are no significant high-frequency random vibration inputs at the PAF/spacecraft interface that are generated by the Delta II launch vehicle; consequently, a Delta II PAF/spacecraft interface random vibration environment is not specified.

4.2.3.4 Sinusoidal Vibration Environment. The spacecraft will experience sinusoidal vibration inputs during flight as a result of Delta II launch and ascent transients and oscillatory flight events. The maximum flight level sinusoidal vibration inputs are the same for all Delta II launch vehicle configurations and are defined in Table 4-7 at the base of the payload attach fitting. These sinusoidal vibration levels provide general envelope low-frequency flight dynamic events such as liftoff transients, transonic/maximum Q oscillations, pre-main en-

Table 4-7. Sinusoidal Vibration Levels

Axis	Frequency (Hz)	Maximum flight levels
Thrust	5 to 6.2	1.27 cm (0.5 inch) double amplitude
	6.2 to 100	1.0 g (zero to peak)
Lateral	5 to 100	0.7 g (zero to peak)

M046,T4-6

gine cutoff (MECO) sinusoidal oscillations, MECO transients, and second/third-stage events.

The sinusoidal vibration levels in Table 4-7 are not intended for use in the design of spacecraft primary structure. Limit load factors for spacecraft primary structure design are specified in Table 4-5.

The sinusoidal vibration levels should be used in conjunction with the results of the coupled dynamic loads analysis (Table 8-3, Item 6) to aid in the design of spacecraft secondary structure (e.g., solar arrays, antennae, appendages, etc.) that may experience dynamic loading due to coupling with Delta II launch vehicle low-frequency dynamic oscillations. Notching of the sinusoidal vibration input levels at spacecraft fundamental frequencies maybe required during testing and should be based on the results of the vehicle coupled dynamic loads analysis (see Section 4.2.4.3).

4.2.3.5 Shock Environment. The maximum shock environment at the PAF/spacecraft interface occurs during spacecraft separation from the Delta II launch vehicle and is a function of the PAF/spacecraft separation system configuration. Table 4-8 identifies the Figures that define the shock environment at the spacecraft interface for various missions, PAF configurations, and types of separation systems. Shock levels at the PAF/spacecraft interface due to other flight shock events such as stage separation, fairing separation, and engine ignition/shutdown are not significant compared to the spacecraft separation shock environment.

The maximum flight level shock environments at the PAF/spacecraft interface defined in Figures 4-12 through 4-15 are intended to aid in the design of spacecraft components and secondary structure that may be sensitive to high-frequency pyrotechnic-shock. Typical of this type of shock, the level dissipates rapidly with distance and the number of joints between the shock source and the component of interest. A properly performed system-level shock test is the best simulation of the high-frequency pyrotechnic shock environment (see Section 4.2.4.4).

4.2.4 Spacecraft Qualification and Acceptance Testing. This section outlines a series of environmental system-level qualification, acceptance, and protoflight tests for spacecraft launched on Delta II vehicles. The tests presented here are, by necessity, generalized in order to encompass numerous spacecraft configurations. For this reason, each spacecraft project should critically evaluate its own specific requirements and develop detailed test specifications tailored to its particular spacecraft. Coordination with the Delta Program Office during the development of spacecraft test specifications is encouraged to ensure the adequacy of the spacecraft test approach (see Table 8-3, Item 5).

The qualification test levels presented in this section are intended to ensure that the spacecraft possesses adequate design margin to withstand the maximum expected Delta II dynamic environmental loads, even with minor weight and design varia-

Table 4-8. Spacecraft Interface Shock Environment Figure Reference

Mission type	PAF configuration	Spacecraft separation system type	Spacecraft interface shock environment
3-Stage	3712A 3712B 3712C	37-in.-dia V-block clamp	See Figure 4-12
2-Stage	6306	63-in. dia V-block clamp	See Figure 4-13
2-Stage	6019	3 explosive separation nuts	See Figure 4-14
2-Stage	6915	4 explosive separation nuts	See Figure 4-14
2-Stage	5624	56-in.-dia V-block clamp	See Figure 4-15

M046,T4-7

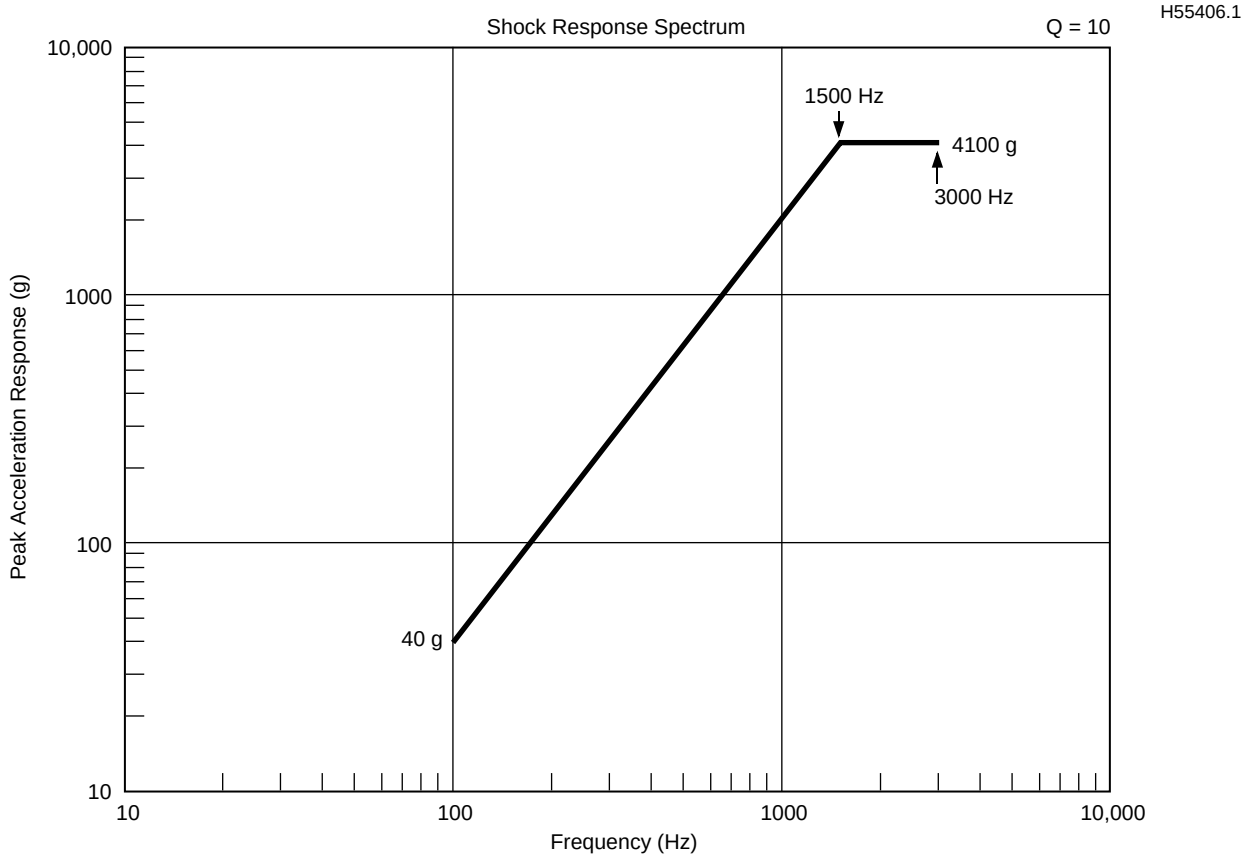

Figure 4-12. Maximum Flight Spacecraft Interface Shock Environment-3712A, 3712B, 3712C Payload Attach Fitting

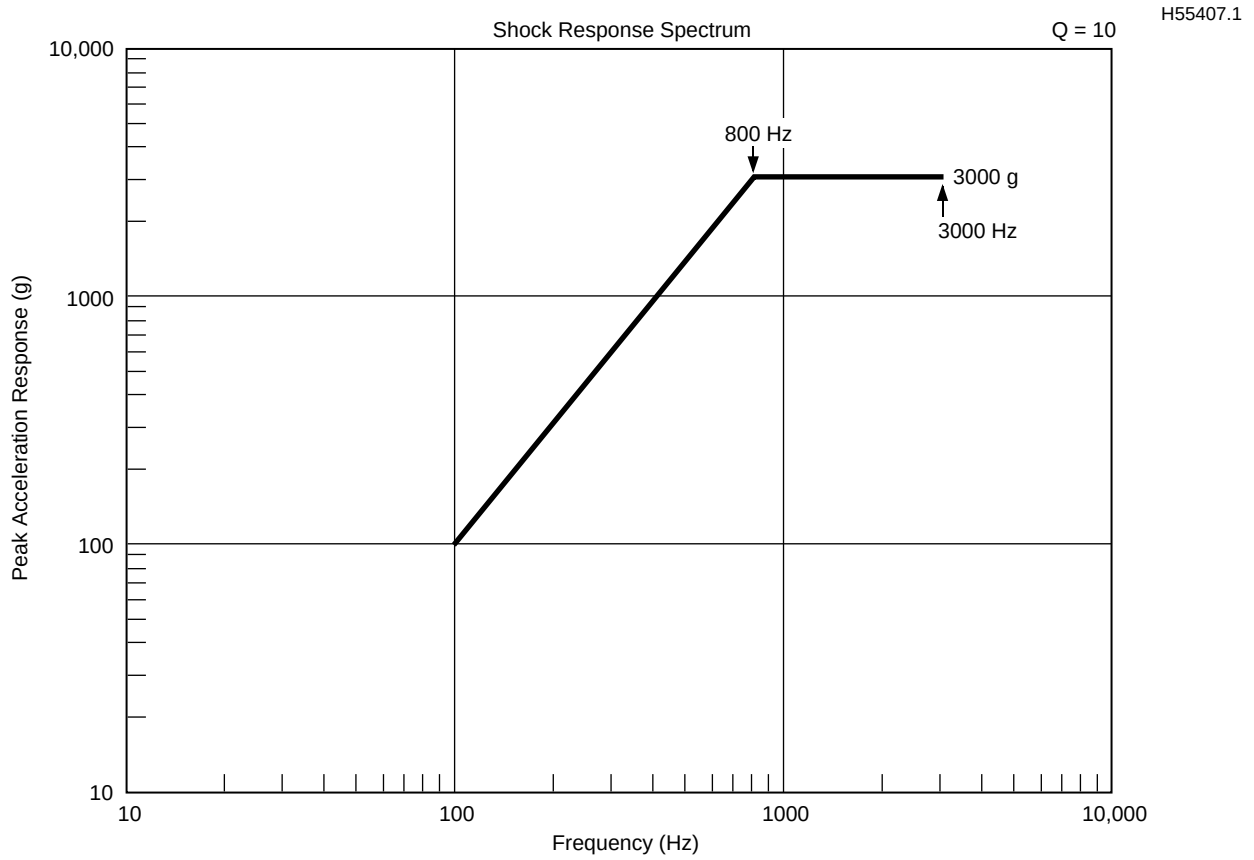

Figure 4-13. Maximum Flight Spacecraft Interface Shock Environment-6306 Payload Attach Fitting

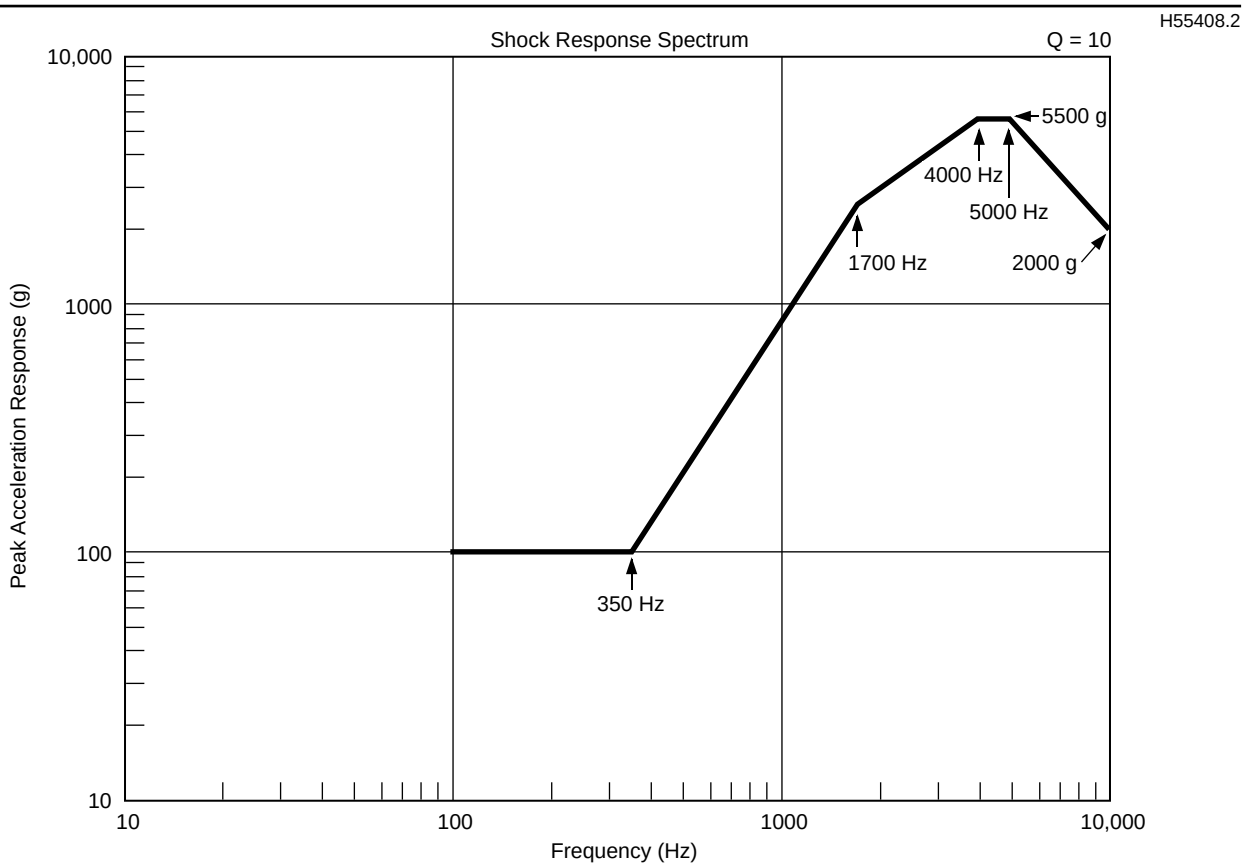

Figure 4-14. Maximum Flight Spacecraft Interface Shock Environment-6019 and 6915 Payload Attach Fitting

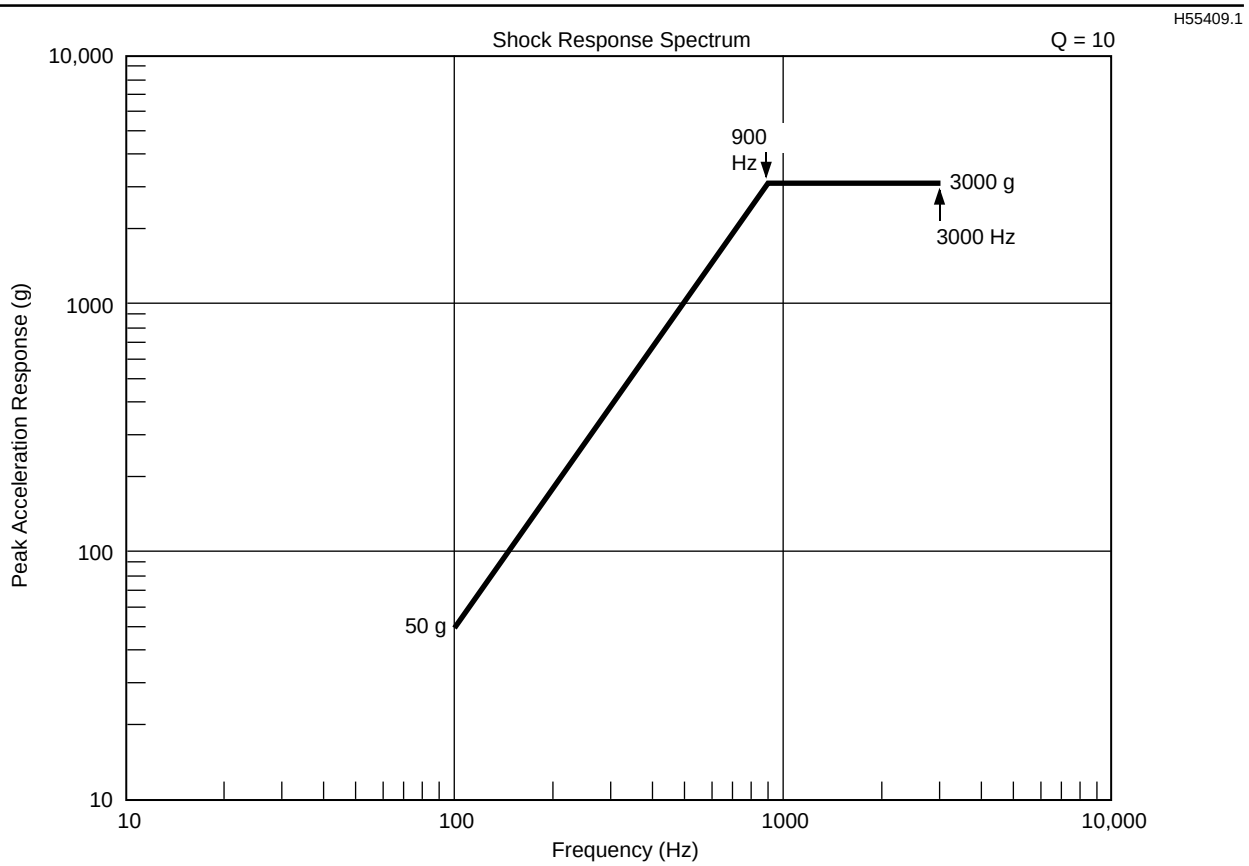

Figure 4-15. Maximum Flight Spacecraft Interface Shock Environment-5624 Payload Attach Fitting

tions. The acceptance test levels are intended to verify adequate spacecraft manufacture and workmanship by subjecting the flight spacecraft to maximum expected flight environments. The protoflight test approach is intended to combine verification of adequate design margin and adequacy of spacecraft manufacture and workmanship by subjecting the flight spacecraft to protoflight test levels, which are equal to qualification test levels with reduced durations.

4.2.4.1 Structural Load Testing. Structural load testing is performed by the user to demonstrate the design integrity of the primary structural elements of the spacecraft. These loads are based on worst-case conditions as defined in Sections 4.2.3.1 and 4.2.3.2. Maximum flight loads will be increased by a factor of 1.25 to determine qualification test loads.

A test PAF is required to provide proper load distribution at the spacecraft interface. The spacecraft user shall consult the Delta Program Office before developing the structural load test plan and shall obtain concurrence for the test load magnitude in order to ensure that the PAF will not be stressed beyond its load carrying capability.

When the maximum axial load is controlled by the third stage, radial accelerations due to spin must be included. Spacecraft combined-loading qualification testing is accomplished by a static load test or on a centrifuge. Generally, static load tests can be readily performed on structures with easily defined load paths, whereas for complex spacecraft assemblies, centrifuge testing may be the most economical.

Test duration shall be 30 sec. Test tolerances and mounting of the spacecraft for centrifuge testing is accomplished per Paragraph 4, Method 513, Military Standard 81OE, Environmental Test Methods, dated 14 July 1989, which states:

After the test item is properly oriented and mounted on the centrifuge, measurements and calculations must be made to assure the end of the test item nearest to the center of the centrifuge will be subjected to no less than 90 percent of the g-level established for the test. If the g-level is found to be less than 90 percent of the established g-level, the test item must be mounted further out on the centrifuge arm and the rotational speed adjusted accordingly or a larger centrifuge used so that the end of the test item nearest to the center of the centrifuge is subjected to at least 90 percent of the established g-level. However, the opposite end of the test item (the end farthest from the center of the centrifuge) should not be subjected to over 110 percent of the established g-level. For large test items, exceptions should be made for load gradients based on the existing availability of large centrifuges in commercial or government test facilities.

4.2.4.2 Acoustic Testing. The maximum flight level acoustic environments defined in Section 4.2.3.3 are increased by 3.0 dB for spacecraft acoustic qualification and protoflight testing. The acoustic test duration is 120 seconds for qualification testing and 60 seconds for protoflight testing. For spacecraft acoustic acceptance testing, the acoustic test levels are equal to the maximum flight level acoustic environments defined in Section 4.2.3.3. The acoustic acceptance test duration is 60 seconds. The acoustic qualification, acceptance, and protoflight test levels for the Delta I1 7900 series launch vehicle configurations are defined in Tables 4-9 through 4-11. As indicated, the test levels for the Delta II 7300 series launch vehicle configurations are 2.0 dB lower than those for the 7900 series launch vehicle.

The acoustic test tolerances are +4 dB and -2 dB from 50 Hz to 2000 Hz. Above and below these frequencies the acoustic test levels should be main-

Table 4-9. Acoustic Test Levels, Delta II 7925 9.5-ft Fairing, Three-Stage Mission, 3.0-in. Blanket Configuration

One-third octave center frequency (Hz)	Acceptance test levels (dB)	Qualification test levels (dB)	Protoflight test levels (dB)
31.5	121.5	124.5	124.5
40	124	127	127
50	126	129	129
63	127	130	130
80	128.5	131.5	131.5
100	129	132	132
125	129.5	132.5	132.5
160	129.5	132.5	132.5
200	130	133	133
250	130	133	133
315	130	133	133
400	129.5	132.5	132.5
500	127.5	130.5	130.5
630	125.5	128.5	128.5
800	124.5	127.5	127.5
1000	122	125	125
1250	119	122	122
1600	117.5	120.5	120.5
2000	116.5	119.5	119.5
2500	115.5	118.5	118.5
3150	114	117	117
4000	112.5	115.5	115.5
5000	110.5	113.5	113.5
6300	108.5	111.5	111.5
8000	107	110	110
10000	105.5	108.5	108.5
OASPL	140.0	143.0	143.0
Duration	60 sec	120 sec	60 sec
Note: Delta II 7325 acoustic environment is 2.0 dB lower			

M046,T4-8

Table 4-10. Acoustic Test Levels, Delta II 7920 9.5-ft Fairing, Two-Stage Mission, 3.0-in. Blanket Configuration

One-third octave center frequency (Hz)	Acceptance test levels (dB)	Qualification test levels (dB)	Protoflight test levels (dB)
31.5	121.5	124.5	124.5
40	124	127	127
50	127	130	130
63	129	132	132
80	130	133	133
100	130	133	133
125	130.5	133.5	133.5
160	131	134	134
200	132	135	135
250	133	136	136
315	135	138	138
400	139	142	142
500	140.5	143.5	143.5
630	138	141	141
800	133	136	136
1000	131	134	134
1250	130.5	133.5	133.5
1600	130.5	133.5	133.5
2000	128.5	131.5	131.5
2500	127	130	130
3150	127	130	130
4000	125	125	125
5000	124	127	127
6300	120.5	123.5	123.5
8000	119.5	122.5	122.5
10000	118.5	121.5	121.5
OASPL	146.7	149.7	149.7
Duration	60 sec	120 sec	60 sec
Note: Delta II 7320 acoustic environment is 2.0 dB lower			

M046,T4-9

tained as close to the nominal test levels as possible within the limitations of the test facility. The overall sound pressure level (OASPL) should be maintained within +3 dB and -1 dB of the nominal overall test level.

4.2.4.3 Sinusoidal Vibration Testing. The maximum flight level sinusoidal vibration environments defined in Section 4.2.3.4 are increased by 3.0 dB (a factor of 1.4) for spacecraft qualification and protoflight testing. For spacecraft acceptance testing, the sinusoidal vibration test levels are equal to the maximum flight level sinusoidal vibration environments defined in Section 4.2.3.4. The sinusoidal vibration qualification, acceptance, and protoflight test levels for all Delta II launch vehicle configurations are defined in Tables 4-12 through 4-14 at the base of the payload attach fitting.

The spacecraft sinusoidal vibration qualification test consists of one sweep through the specified frequency range using a logarithmic sweep rate of 2 octaves per minute. For spacecraft acceptance and protoflight testing, the test consists of one sweep through the specified frequency range using a logarithmic sweep rate of 4 octaves per minute. The sinusoidal vibration test input levels should be maintained within + or - 10% of the nominal test levels throughout the test frequency range.

When testing a spacecraft with a shaker in the laboratory, it is not within the current state of the

Table 4-11. Acoustic Test Levels, Delta II 7920 and 7925 10-ft Fairing, Two- and Three-Stage Mission, 3.0-in. Blanket Configuration

One-third octave center frequency (Hz)	Acceptance test levels (dB)	Qualification test levels (dB)	Protoflight test levels (dB)
31.5	119.5	122.5	122.5
40	122.5	125.5	125.5
50	126.5	129.5	129.5
63	128	131	131
80	128.5	131.5	131.5
100	129.5	132.5	132.5
125	130	133	133
160	130	133	133
200	130.5	133.5	133.5
250	131.5	134.5	134.5
315	132.5	135.5	135.5
400	131.5	134.5	134.5
500	128	131.5	131.5
630	125	128	128
800	122	125	125
1000	120	123	123
1250	118	121.5	121.5
1600	117	120	120
2000	116.5	119.5	119.5
2500	116	119	119
3150	115	118	118
4000	113.5	116.5	116.5
5000	111	114.5	114.5
6300	107	110	110
8000	103	106	106
10000	100	103	103
OASPL	140.8	143.8	143.8
Duration	60 sec	120 sec	60 sec

Note: Delta II 7320 and 7325 acoustic environment is 2.0 dB lower

M046,T4-10

art to duplicate the boundary conditions at the shaker input that actually occur in flight. This is notably evident in the spacecraft lateral axis during test, when the shaker applies large vibratory forces to maintain a constant acceleration input level at the spacecraft fundamental lateral test frequencies. The response levels experienced by the spacecraft at these fundamental frequencies during test are usually much more severe than those experienced in flight. The significant lateral loading to the spacecraft during flight is usually governed by the effects of spacecraft/launch vehicle dynamic coupling.

Where it can be shown by a spacecraft launch vehicle coupled dynamic loads analysis that the spacecraft or PAF/spacecraft assembly would experience unrealistic response levels during test, the sinusoidal vibration input level can be reduced (notched) at the fundamental resonances of the hardmounted spacecraft or PAF/spacecraft assembly to more realistically simulate flight loading conditions. This has been accomplished on many previous spacecraft in the lateral axis by correlating one or several accelerometers mounted on the

Table 4-12. Sinusoidal Vibration Acceptance Test Levels

Axis	Frequency (Hz)	Acceptance test levels	Sweep rate
Thrust	5 to 6.2 6.2 to 100	1.27 cm (0.5 inch) double amplitude 1.0 g (zero to peak)	4 octaves/minute
Lateral	5 to 100	0.7 g (zero to peak)	4 octaves/minute

M046,T4-13

Table 4-13. Sinusoidal Vibration Qualification Test Levels

Axis	Frequency (Hz)	Acceptance test levels	Sweep rate
Thrust	5 to 7.4 7.4 to 100	1.27 cm (0.5 inch) double amplitude 1.4 g (zero to peak)	2 octaves/minute
Lateral	5 to 6.2 6.2 to 100	1.27 cm (0.5 inch) double amplitude 1.0 g (zero to peak)	2 octaves/minute

M046,T4-14

Table 4-14. Sinusoidal Vibration Protoflight Test Levels

Axis	Frequency (Hz)	Acceptance test levels	Sweep rate
Thrust	5 to 7.4 7.4 to 100	1.27 cm (0.5 inch) double amplitude 1.4 g (zero to peak)	4 octaves/minute
Lateral	5 to 6.2 6.2 to 100	1.27 cm (0.5 inch) double amplitude 1.0 g (zero to peak)	4 octaves/minute

M046,T4-15

spacecraft to the bending moment at the PAF/spacecraft separation plane. The bending moment is then limited by: (1)introducing a narrow-band notch into the sinusoidal vibration input program, or (2)controlling the input by a servo-system using a selected accelerometer on the spacecraft as the limiting monitor. A redundant accelerometer is usually used as a backup monitor to prevent shaker runaway.

The Delta II program normally conducts a spacecraft/launch vehicle coupled dynamic loads analysis for various spacecraft configurations to define the maximum expected bending moment in flight at the spacecraft separation plane. In the absence of a specific dynamic analysis, the bending moment is limited to protect the payload attach fitting, which is designed for a wide range of spacecraft configurations and weights. The spacecraft user should consult the Delta Program Office before developing the sinusoidal vibration test plan for information on the spacecraft/launch vehicle coupled dynamic loads analysis for that special mission or similar missions. In many cases, the notched sinusoidal vibration test levels are established from previous similar analyses.

4.2.4.4 Shock Testing. High-frequency pyrotechnic shock levels are very difficult to simulate mechanically on a shaker at the spacecraft system level. The most direct method for this testing is to use a Delta II flight configuration PAF/spacecraft separation system and PAF structure with functional ordnance devices. Spacecraft qualification and protoflight shock testing is performed by installing the in-flight configuration of the PAF/spacecraft separation system and activating the system twice. Spacecraft shock acceptance testing is performed in a similar manner by activating the PAF/spacecraft separation system once.

4.2.5 Dynamic Analysis Criteria and Balance Requirements

4.2.5.1 Two-Stage Missions. Two-stage missions utilize the capability of the second stage to provide the terminal velocity, roll, final spacecraft orientation, and separation.

Spin Balance Requirements. For nonspinning spacecraft, there is no dynamic balance constraint, but the static imbalance directly influences the spacecraft angular rates at separation. When there is a separation tipoff constraint, the spacecraft CG offset must be coordinated with the Delta Program Office for evaluation.

Two-Step Separation System. For missions in which there is a critical constraint on separation tipoff angular rate, a two-step separation system can be employed. The second stage and spacecraft are held together by loose fitting latches following primary separation of the nuts and bolts or clamp bands. After a sufficient time (30 sec) for the angular rates to dissipate, the latches are released and the second-stage retro thrust provides the required relative separation velocity from the spacecraft.

Second-Stage Roll Rate Capability. For some two-stage missions, the spacecraft may require a low roll rate at separation. The Delta second stage can command roll rates up to 4 rpm (0.42 rad/s) using control jets. Higher roll rates are also possible; however, the accuracy is degraded as the rate increases. Roll rates higher than 4 rpm (0.42 rad/s) must be assessed relative to specific spacecraft requirements. Significantly higher roll rates may require the use of a spin-table assembly.

4.2.5.2 Three-Stage Missions. Three-stage missions employ a spin-stabilized upper stage. The spin table, third-stage motor, PAF, and spacecraft combination are accelerated to the initial spin rate

prior to third-stage ignition by the activation of four to eight spin rockets mounted on the spin table. Two rocket sizes are available to achieve the desired spin rate.

Spin Balance Requirements. To minimize the cone angle and momentum vector pointing error of the spacecraft/third-stage combination after second-stage separation, it is necessary that the imbalance of the spacecraft alone be within specified values. The spacecraft should be balanced to produce a CG within 1.3 mm (0.05 in.) of the centerline, and a principal axis misalignment of less than 0.25 deg with respect to the centerline. The spacecraft centerline is defined as a line perpendicular to the separation plane of the spacecraft that passes through the center of the theoretical spacecraft/PAF diameter (refer to Section 5).

A composite balance of the entire third-stage/spacecraft assembly is not required. It has been shown analytically that the improvements derived from a composite balance were generally small and do not justify the handling risk associated with spacecraft spin balance on a live motor.

For most spinning spacecraft, it has been demonstrated that the static and dynamic balance limits defined herein can be satisfied. For the larger, heavier spacecraft where such a constraint may be difficult to satisfy, the effects of broadened tolerances are analyzed on a per-case basis.

The angular momentum/velocity pointing errors and cone angle are highly dependent upon the spacecraft spin rate, CG location, moments and products of inertia, NCS operation during upper-stage motor burn and coast periods, and the spacecraft energy dissipation sources during the coast periods. The Delta Program Office, therefore, should be consulted if the above constraints cannot be met. Pointing errors and cone angles are estimated as required for the mission-specific spacecraft characteristics.

Spin Rate Capability. Spin-up of the third stage/spacecraft combination is accomplished by activating small rocket motors mounted on the spin table that supports the payload. Spin direction is clockwise, looking forward. Spin rates from 30 to 110 rpm are attainable for a large range of spacecraft roll moments of inertia (MOI) as shown in Figure 4-16. Nominal spin rates can be provided within ±5 rpm for any value specified in the region of spin rate capability (Figure 4-16). Once a nominal spin rate has been determined, 3σ variations in relevant parameters will cause a spin rate prediction uncertainty of ±15% about that nominal value at spacecraft separation.

Because orbit errors are dependent upon spin rate, the magnitude of the orbit errors must be assessed relative to the mission requirements and spacecraft mass properties before final resolution of the spin rate for a specific spacecraft mission is accomplished.

Spin-Up Angular Acceleration. Spin-up of the third-stage assembly imposes angular acceleration loads upon the spacecraft. The maximum angular acceleration that will occur while attaining a desired spin rate is fixed by spin motor thrust characteristics.

The Delta II spin system utilizes two different spin motors in various combinations to attain specified spin rates. Figure 4-17 shows the maximum angular acceleration that could be incurred by the system. Two curves are shown, one for a nominal propellant temperature condition of 70°F (21.1°C) and another for a maximum allowable temperature of 130°F (54.4°C) and +3σ burn rate.

Figure 4-17 is based on the maximum motor thrust which occurs for a duration of approximately

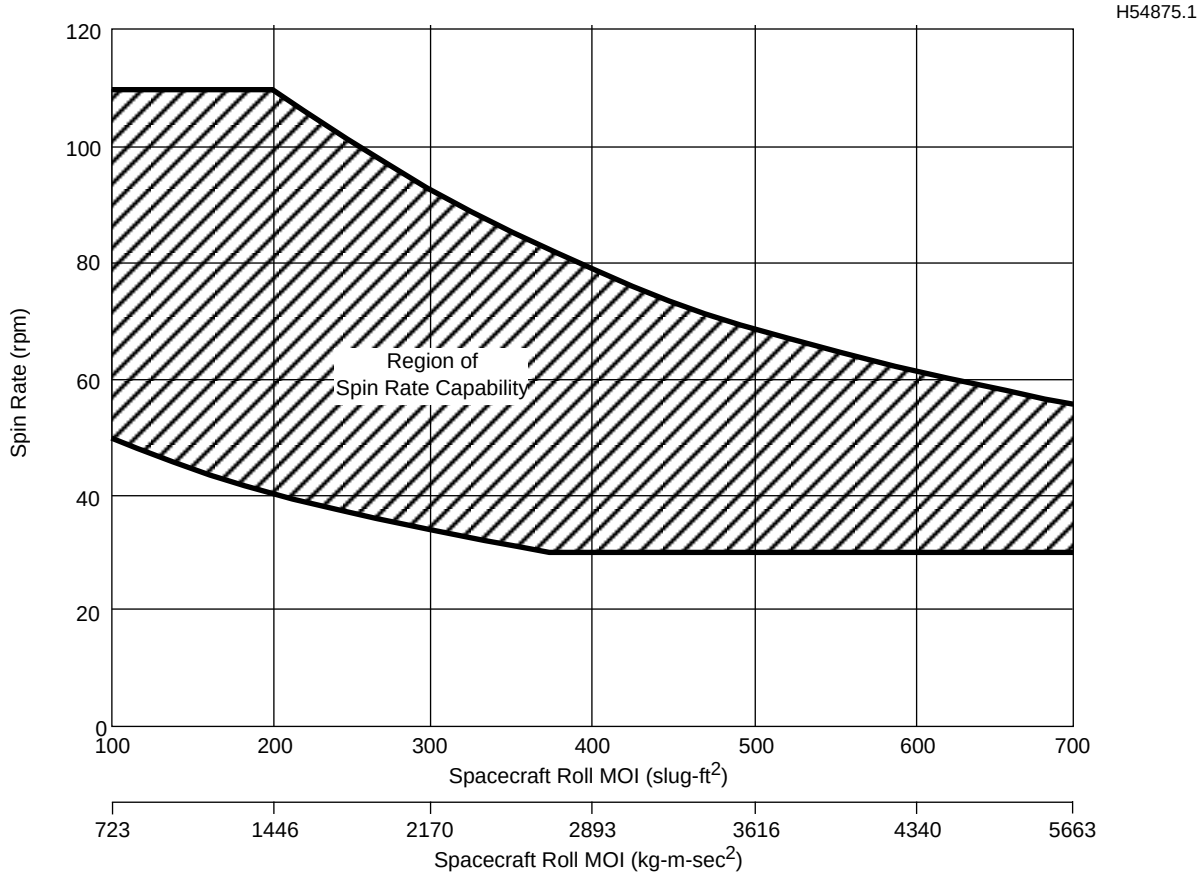

Figure 4-16. Delta II Spin Rate Capability

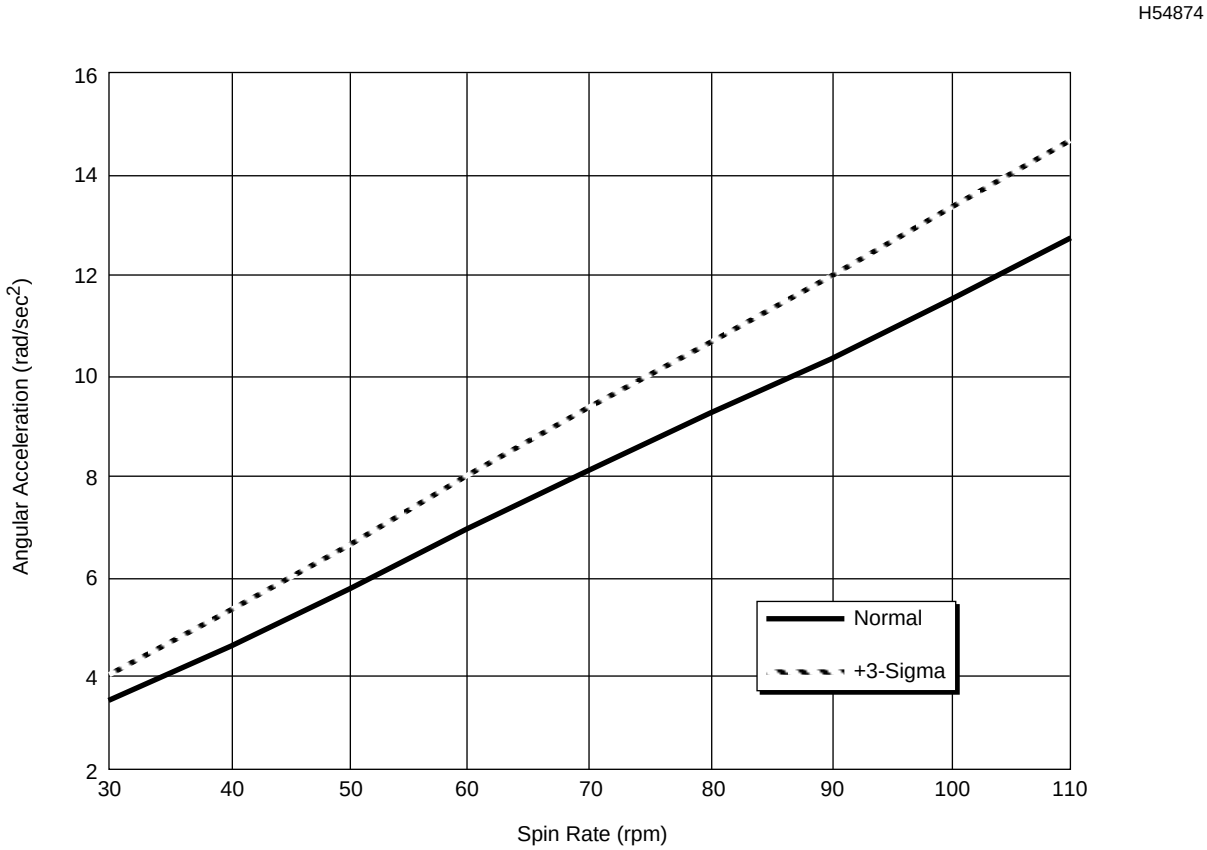

Figure 4-17. Maximum Expected Angular Acceleration Versus Spin Rate

30 msec during ignition. If the maximum acceleration is excessive, a detailed angular acceleration history can be provided for customer evaluation. If not tolerable, special provisions such as sequential firing of spin motors can be considered.

Spacecraft Energy Dissipation During Coast Periods. Dissipation of spacecraft energy caused by nutation dampers, fuel slosh in the propellant tanks, flexible antennas, etc., can cause divergence in the cone angle between the spin axis of the spacecraft/third-stage combination and its angular momentum vector when the spin moment of inertia is less than the transverse moment of inertia. During the periods between (1) third-stage separation and ignition and (2) burnout and spacecraft separation, cone angle buildup can affect orbit accuracy, clearance between the spacecraft and the PAF during separation, and spacecraft coning/momentum pointing after separation.

The effect of energy dissipation is highly dependent upon the mass properties and spin rate of the spacecraft/third stage combination. In order for the Delta Program Office to evaluate the effect on a particular mission, the spacecraft agency must provide a worst-case energy dissipation time constant for the combined third stage and spacecraft for conditions before and after third stage burn. Mass properties for the third stage are shown in Table 4-15.

Table 4-15. Third Stage Mass Properties

	Before motor ignition	After motor burnout
Weight (kg/lb)	2213/4878	191/422
CG aft of spacecraft separation plane (mm/in.)	780/30.7	808/31.8
Spin MOI (kg m^2/slug-ft^2)	385/284	45/33
Transverse MOI (kg m^2/slug-ft^2)	454/335	92/68

M029, T036.2, 9/22/95, 9:21 AM

Nutation Control System. The NCS is designed to maintain small cone angles of the combined upper stage and spacecraft and operates during the motor burn and postburn coast phase.

The NCS design concept uses a single-axis rate gyro assembly (RGA) to sense coning and a monopropellant (hydrazine) propulsion module to provide control thrust. The RGA angular rate signal is processed by circuitry that generates thruster on/off commands. Minor changes to the control circuitry are required to accommodate different spacecraft mass properties and spin rates.

The NCS nominal characteristics are listed in Table 4-16. Spacecraft weights less than 1500 lbs may require additional NCS modifications for the high third stage burnout acceleration.

Table 4-16. NCS Nominal Characteristics

Propellant weight	2.72 kg/6.00 lb
Helium prepressure	2.26×10^6 N/m^2/400 psia
Thrust	164.6 N/37 lb
Minimum I_{sp} (pulsing mode)	202.5 sec
Pressure at end of blowdown	9.7 x 10^5 N/m^2/141 psia
Transverse rate threshold	2 deg/sec

M029-T017.1

Section 5
SPACECRAFT INTERFACES

This section presents the detailed descriptions and requirements of the mechanical and electrical interfaces of the launch vehicle with the spacecraft for two- and three-stage missions.

5.1 DELTA THIRD-STAGE DESCRIPTION

The third stage of the Delta II 7325 and 7925 vehicles (Figure 5-1) consists of a Thiokol Star 48B solid-propellant rocket-motor, a cylindrical payload attach fitting (PAF) with a clamp assembly and four separation spring actuators, a nutation control system (NCS), a spin table with bearing assembly, spin rockets, a clamp assembly and four separation spring actuators, an ordnance sequencing system, a telemetry system, and a yo-weight system for tumbling the stage after separation. If required, a yo-yo despin system can be incorporated into the stack as a nonstandarad option in place of the yo-weight system to despin the spacecraft. The pre- and post-burn mass properties of the stage are summarized in Table 4-15.

The Star 48B motor has a diameter of 1244.6 mm (49.0 in.) and an overall length of 2032.0 mm (80.0 in.) including an extended nozzle. The motor has two integral flanges, the lower for attachment to the third-stage spin table and the upper for attachment to the 3712 PAF. The motor consists of a carbon-phenolic exit cone, 6AL-4V titanium high-strength motor case, silica-filled rubber insulation system, and a propellant system using high-energy TP-H-3340 ammonium perchlorate and aluminum with an HTPB binder.

The Star 48B motor is available in propellant off-loaded configurations. The motor is currently qualified for propellant weights ranging from 2010 kg (4430 lb) to 1739 kg (3833 lb) in the maximum off-loaded condition. The amount of off-load is a function of spacecraft weight and the velocity requirements of the mission.

H54794

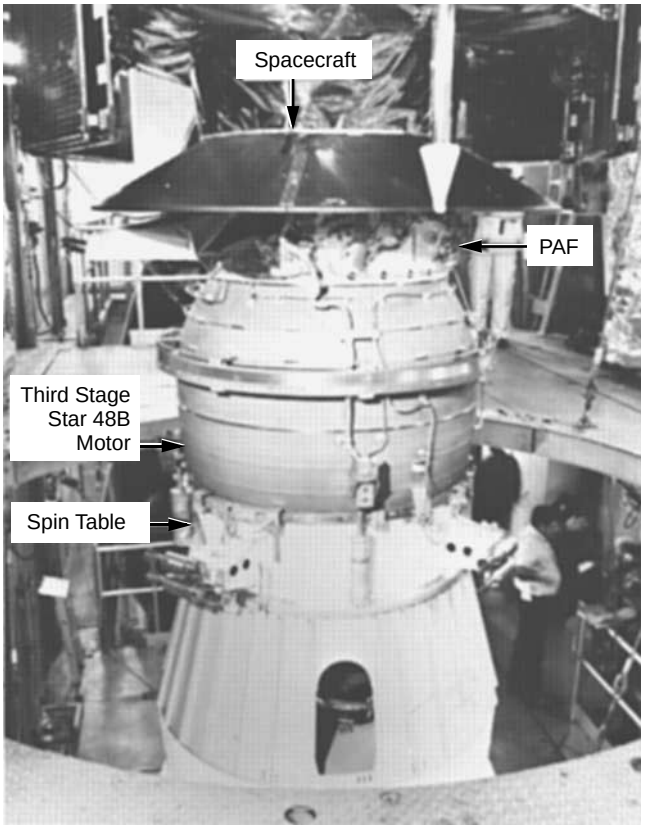

DAC94092

Figure 5-1. Delta II Upper Stage

Because of the development time and cost associated with a custom PAF, it is to the advantage of the spacecraft agency to use the existing PAF designs. As early as possible in the design phase, selection of an appropriate PAF should be coordinated with the Delta Program Office.

5.2 PAYLOAD ATTACH FITTINGS FOR THREE-STAGE MISSIONS

In general, the component, sequencing, and separation system designs are the same for all three-stage applications. The spacecraft is fastened to the PAF by a two-piece V-block-type clamp assembly, which is secured by two instrumented studs, used for clampband testing. Spacecraft separation is initiated by actuation of ordnance cutters that sever the

two studs. Clamp assembly design is such that cutting either stud will permit spacecraft separation. Springs assist in retracting the clamp assembly into retainers after release. A relative separation velocity ranging from 0.6 to 2.4 m/s (2 to 8 ft/sec) is imparted to the spacecraft by four spring actuators. Specific mission-oriented pads may be provided on the PAF at the separation plane to interface with spacecraft separation switches. A yo-weight tumble system despins and imparts a coning motion to the expended third-stage motor 2 sec after spacecraft separation to change the direction of its momentum vector and prevent recontact with the spacecraft.

PAF components are mounted on its surface. All hardware necessary for mating and separation (e.g., PAF, clamp assembly, studs, explosives, and timers) remains with the PAF upon spacecraft separation. Table 5-1 applies to the various configuration drawings that accompany this section.

The 3712 PAF shown in Figure 5-2 is the interface between the upper-stage motor and the spacecraft. The PAF is approximately 305 mm (12 in.) high and 940 mm (37 in.) in diameter. It supports the clamp assembly that attaches the spacecraft to the upper stage and allows the spacecraft to be released at separation. It provides mounts for the four separation spring actuators, two electrical disconnects (if applicable), event sequencing system, upper-stage telemetry, and an NCS.

The 3712 PAF is available with three forward flange configurations, designated 3712A, B, and C. The maximum clamp assembly preload for these configurations is given in Table 5-2.

Figure 5-3 provides estimated capabilities of these configurations on the 7925 launch vehicle for each of two Delta fairings. The capabilities are plotted in terms of spacecraft weight and CG location above the separation plane. The flange

Table 5-1. Notes Used in Configuration Drawings

1. Interpret dimensional tolerance symbols in accordance with American National Standard Institute (ANSI) Y14.5M-1982. The symbols used in this section are as follows:	
Flatness	▱
Circularity	○
Parallelism	//
Perpendicularity (squareness)	⊥
Angularity	∠
Circular runout	↗
Total runout	⌰
True position	⊕
Concentricity	◎
Profile of a surface	⌓
Diameter	∅
2. Unless otherwise specified, tolerances are as follows:	
Decimal	
mm	0.X = ±0.76 0.XX = ±.0.03
in.	0.XX = ±0.03 0.XXX = ±0.015
Angles	= ±0 deg. 30 min
3. Dimensions apply at 69°F (20°C) with interface in unrestrained condition.	
4. All machine surface roughness is 125 per ANSI B46.1, 1985.	
5. The V-block/PAF mating surface is chemically conversion-coated per MIL-C-5541, Class 3	

M029-T012-4/4/96-2:06 PM

configurations and their associated spacecraft interface requirements are shown in Figures 5-4 through 5-16.

The estimated capabilities shown in Figure 5-3 are based on extrapolation of analytical results for numerous generic spacecraft designed to the spacecraft stiffness requirements specified in Section 4.2.3.2. The capability for a specific spacecraft (with its own unique mass, size, flexibility, etc.) may vary from that presented in Figure 5-3. There-

Table 5-2. Maximum Clamp Assembly Preload

PAF	Max flight preload (N/lb)	Spacecraft PAF flange angle (deg)
3712A	30,248/6800	15
3712B	25,355/5700	20
3712C	25,355/5700	20

T037

DAC123579 H54797

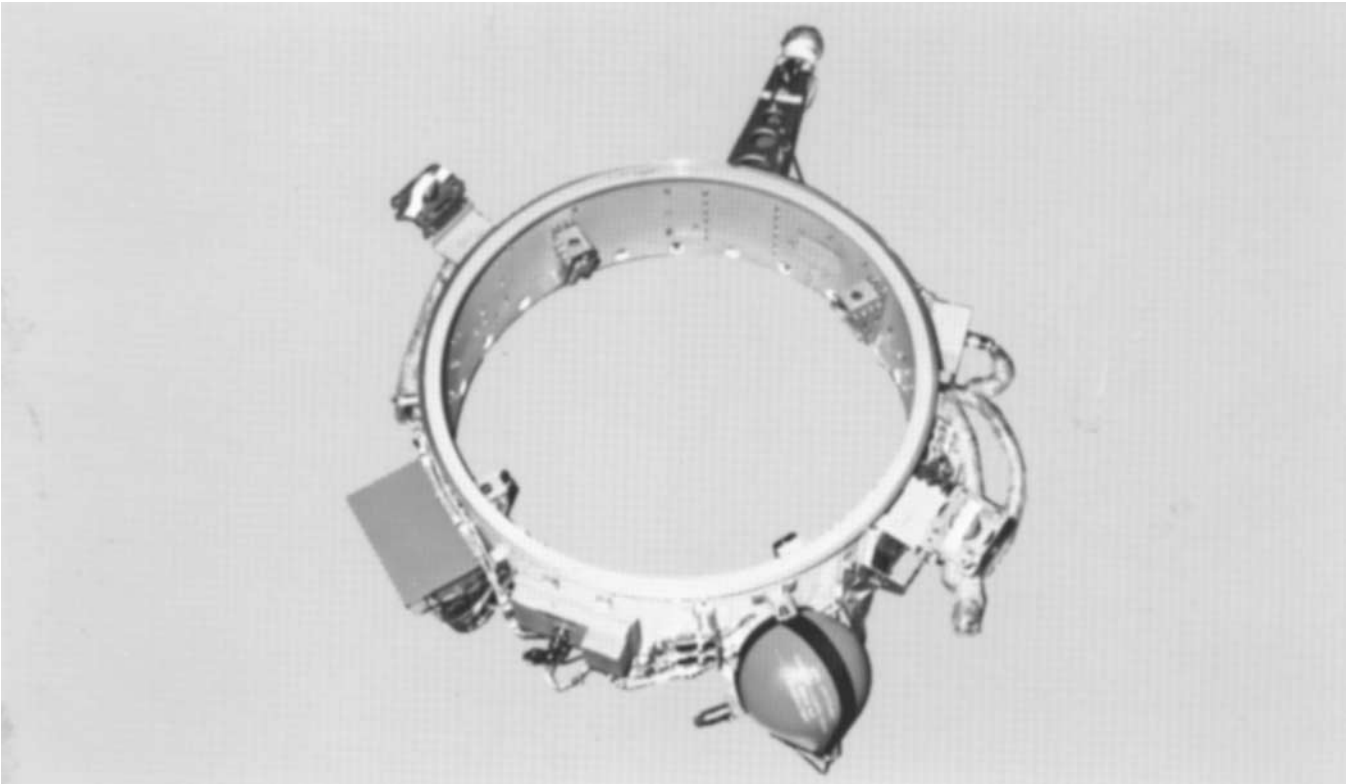

Figure 5-2. 3712 PAF Assembly

02738REU7

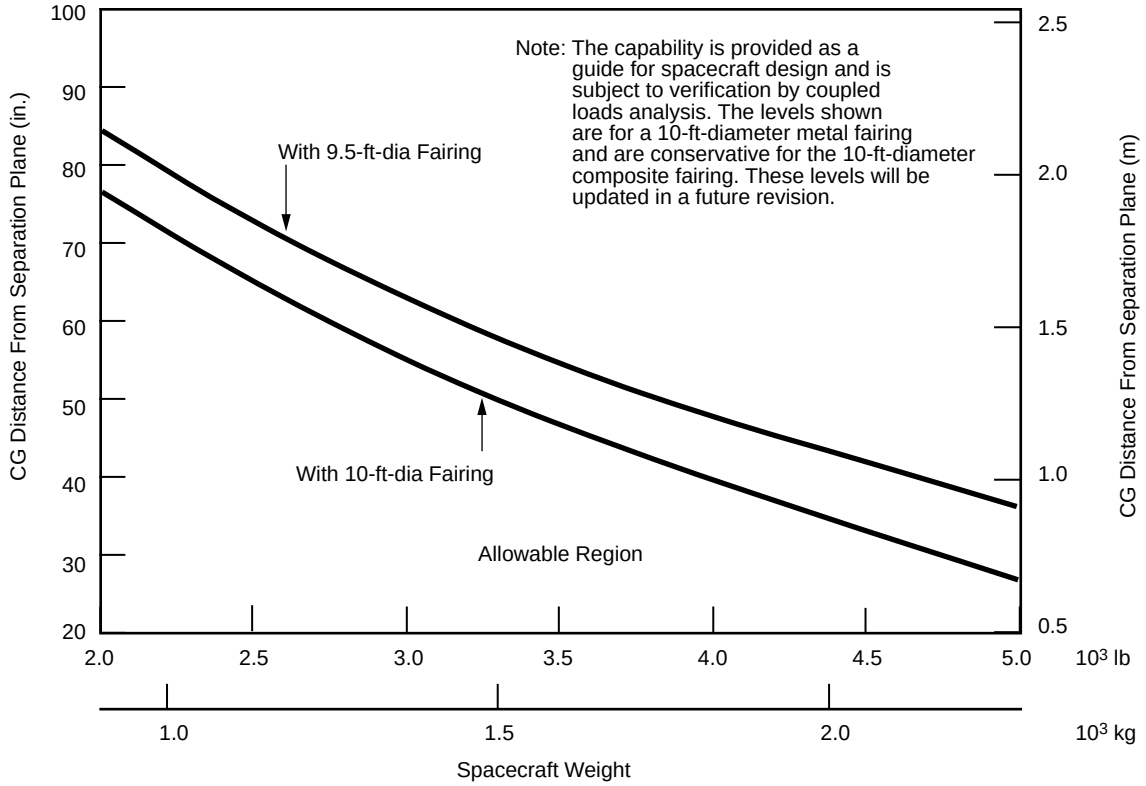

Figure 5-3. Capability of the 3712 PAF Configuration on 7925 Vehicle (Download Figure)

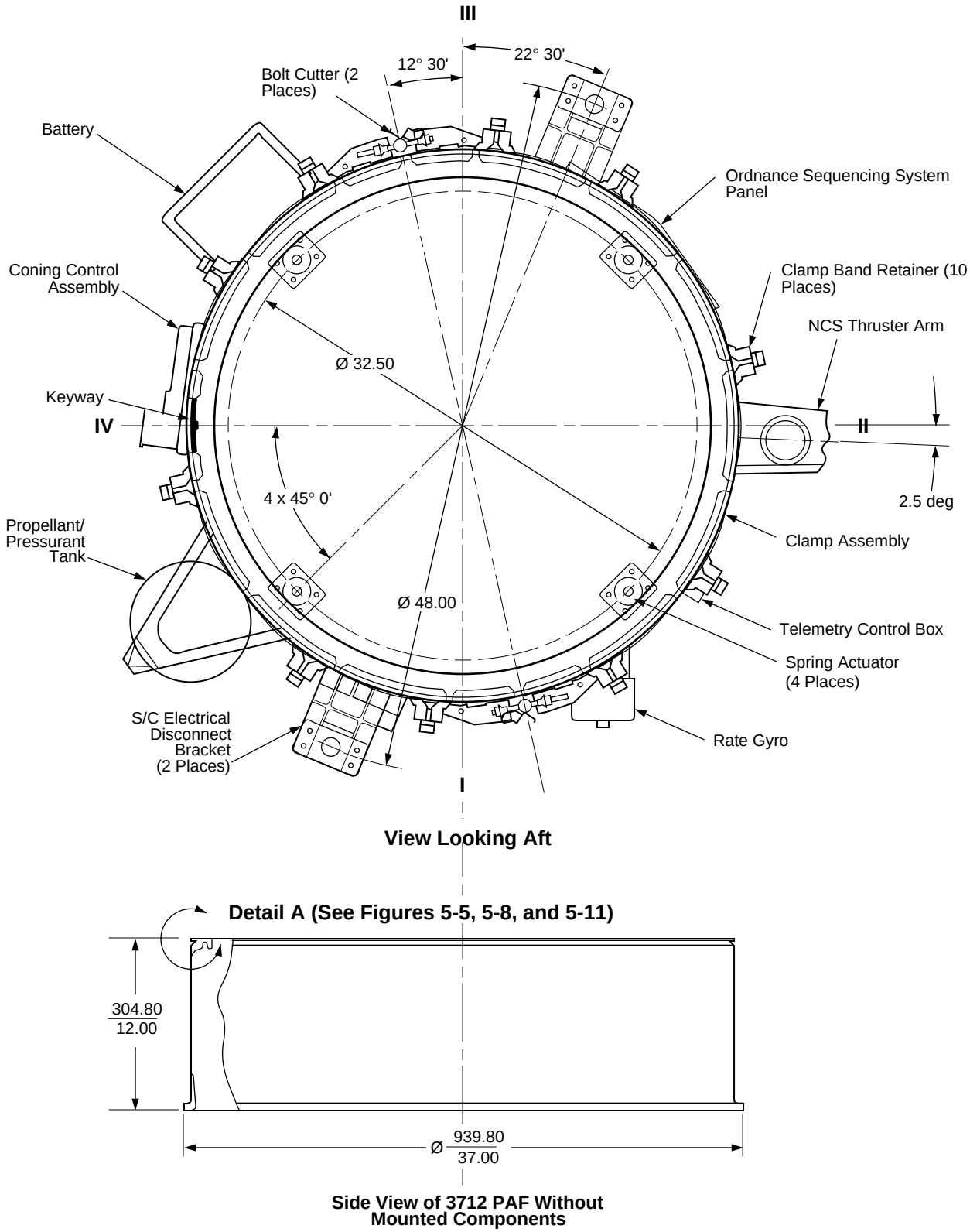

Figure 5-4. 3712 PAF Detailed Assembly (Download Figure)

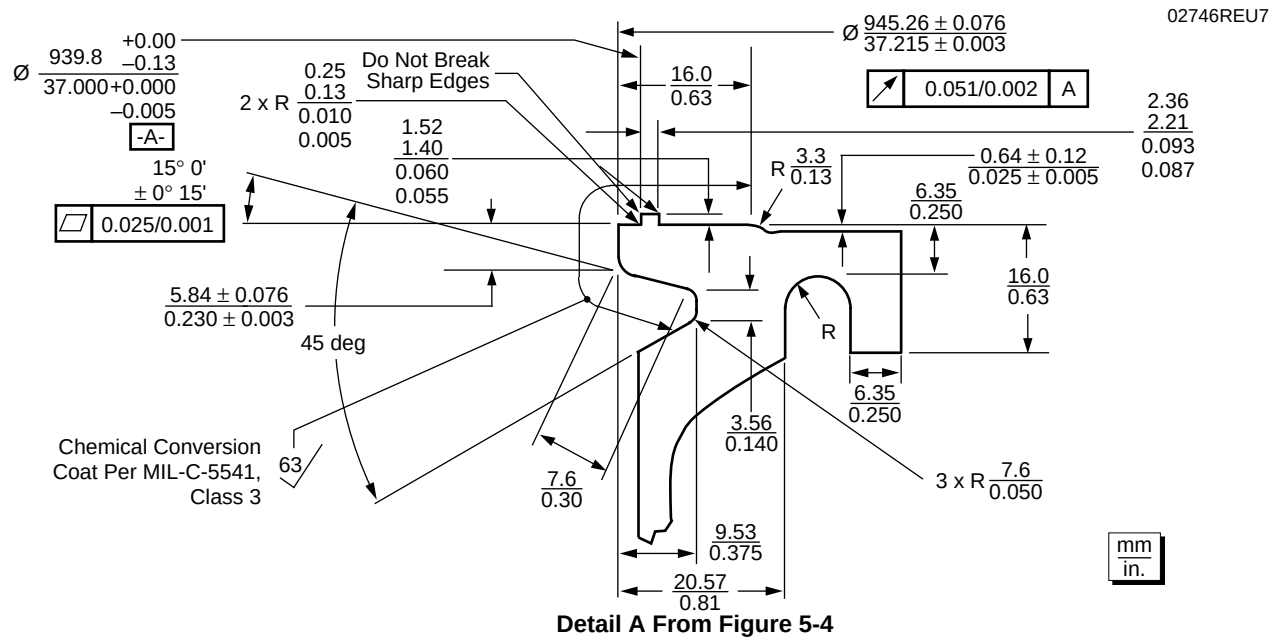

Figure 5-5. 3712A PAF Detailed Dimensions (Download Figure)

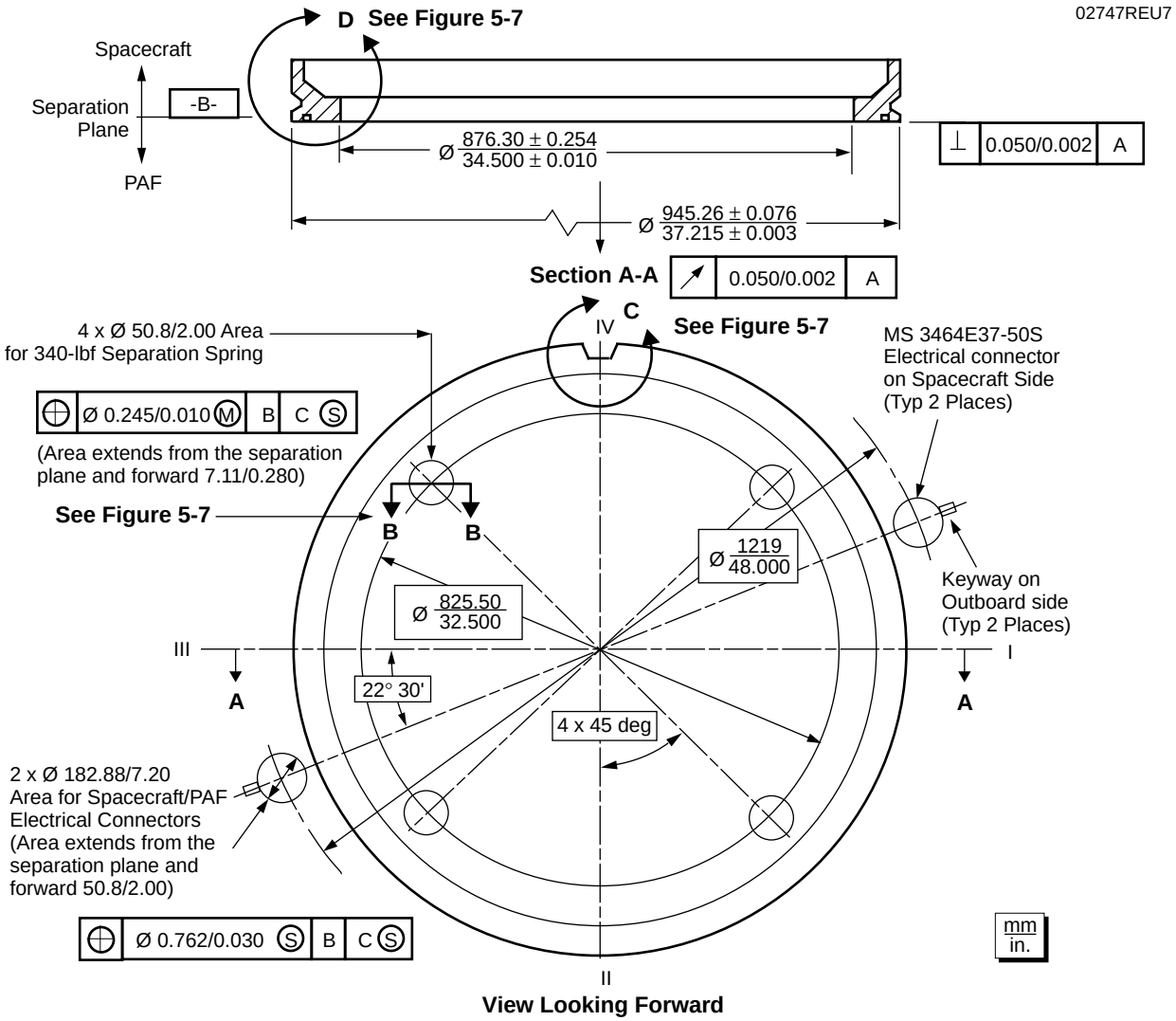

Figure 5-6. 3712A PAF Spacecraft Interface Dimensional Constraints (Download Figure)

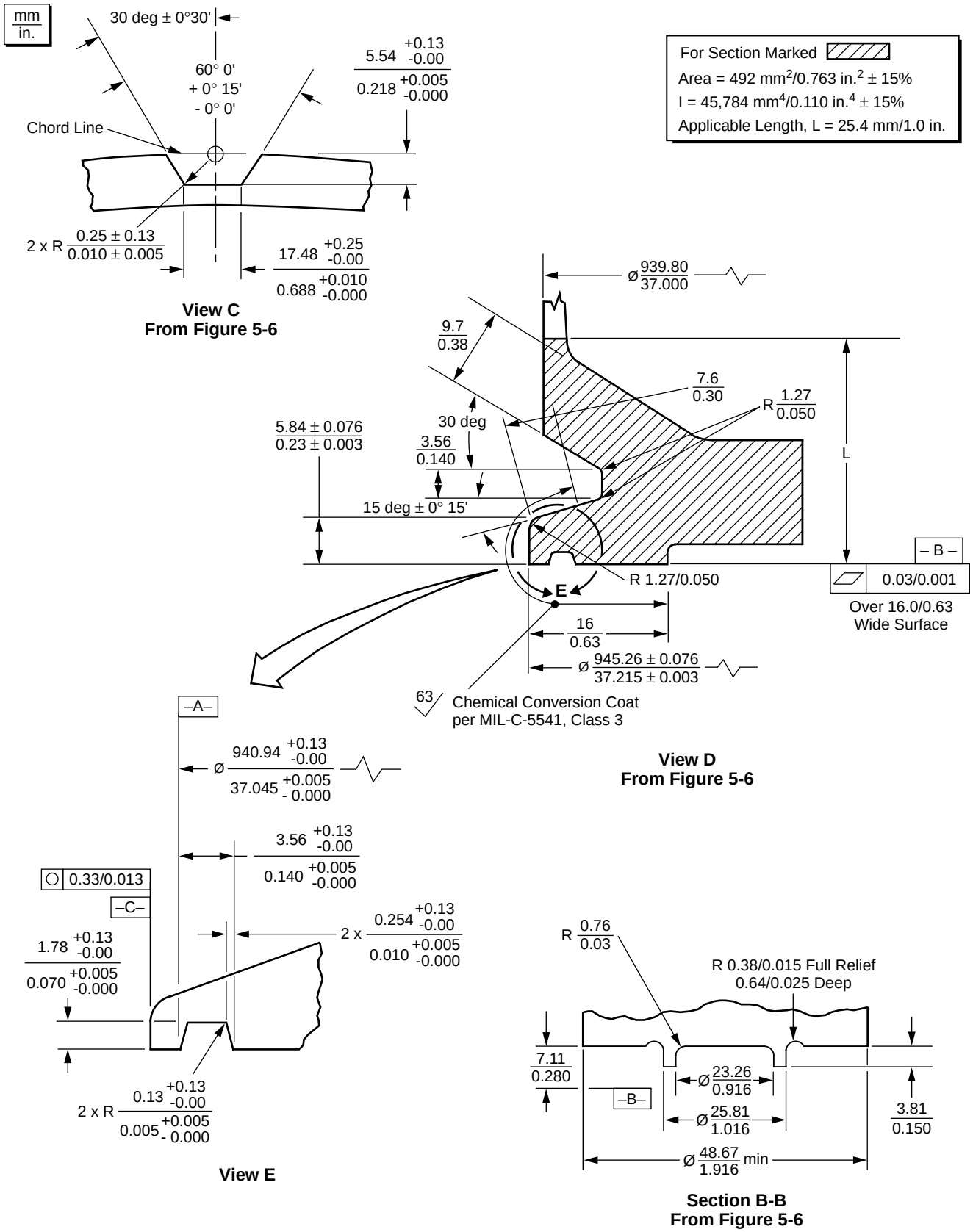

Figure 5-7. 3712A PAF Spacecraft Interface Dimensional Constraints (Views C, D, E, and Section B-B)
(Download Figure)

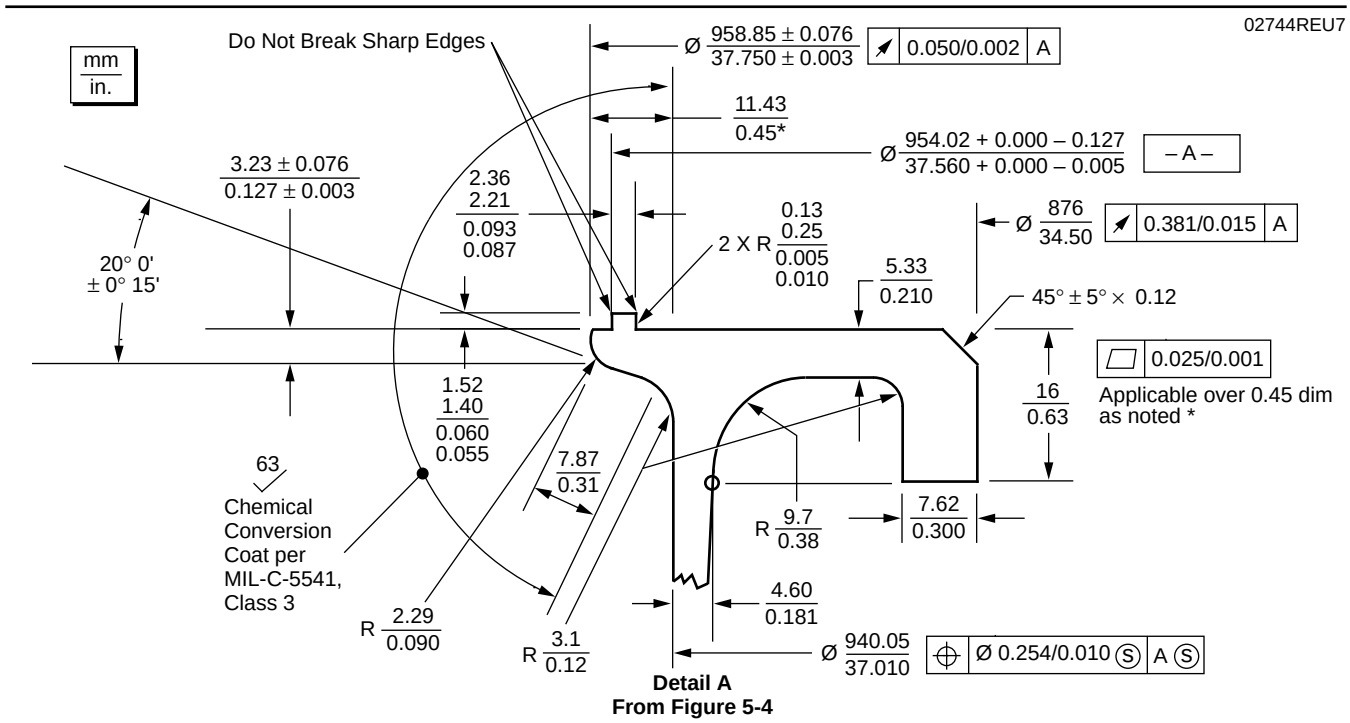

Figure 5-8. 3712B PAF Detailed Dimensions (Download Figure)

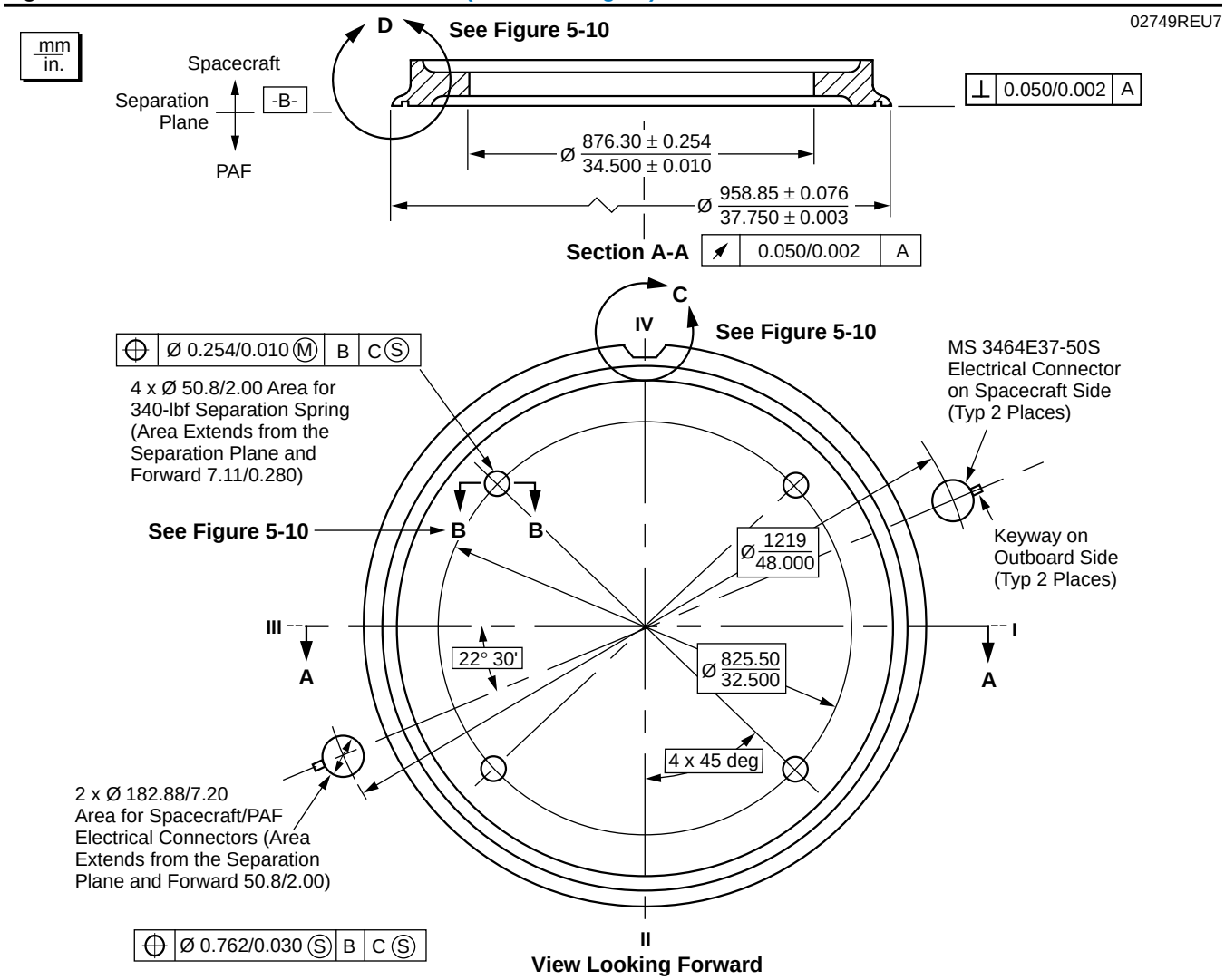

Figure 5-9. 3712B PAF Spacecraft Interface Dimensional Constraints (Download Figure)

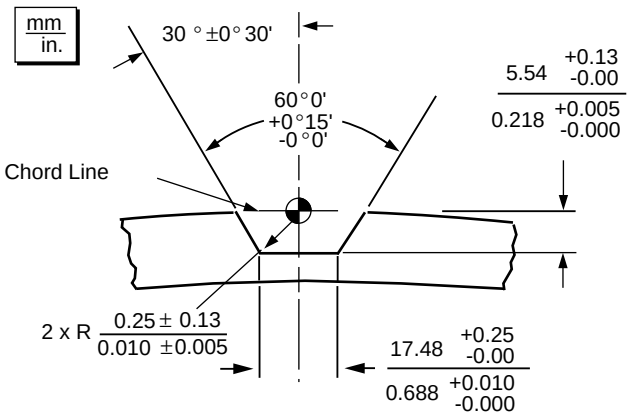

View C
From Figure 5-9

For Section Marked
Area = 269 mm^2/0.417 in.^{2}±15%
I = 11,654 mm^4/0.028 in.^{4}±15%
Applicable Length, L = 25.4 mm/1.0 in.

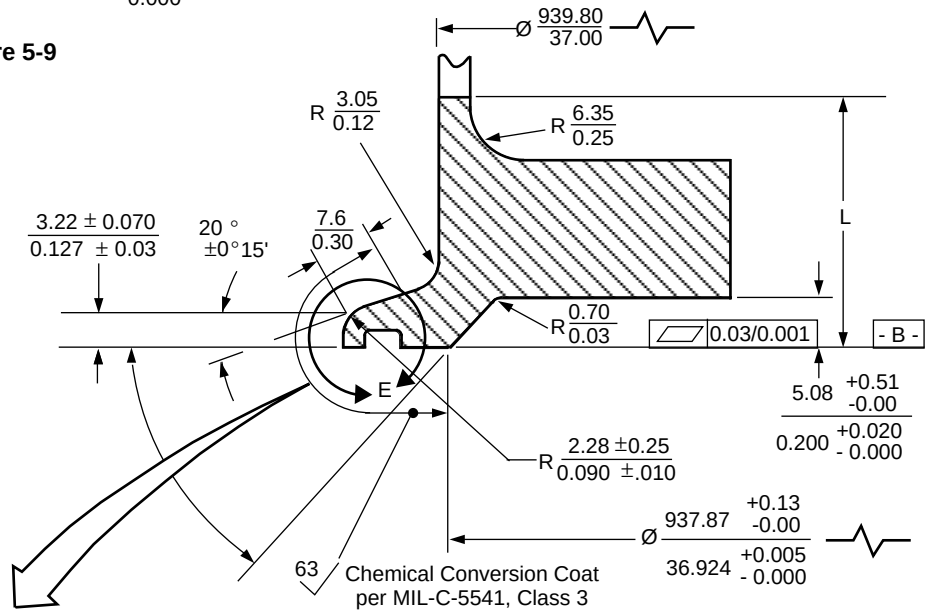

View D
From Figure 5-9

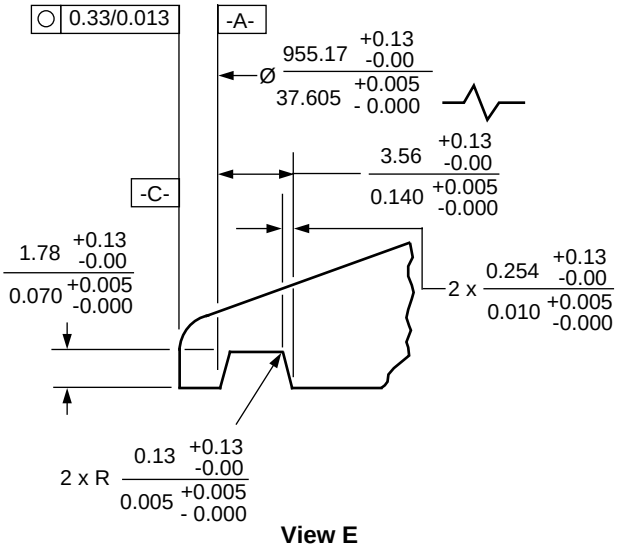

View E

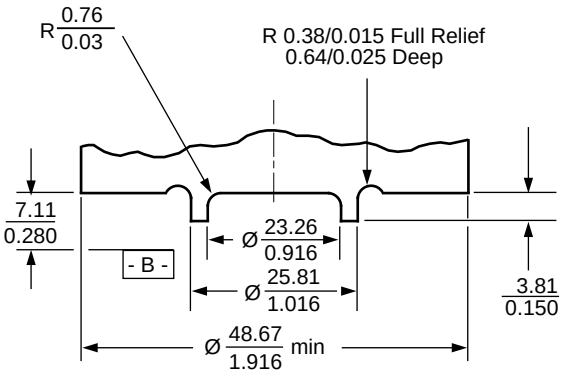

Section B-B
From Figure 5-9

Figure 5-10. 3712B PAF Spacecraft Interface Dimensional Constraints (Views C, D, and E and Section B-B)
(Download Figure)

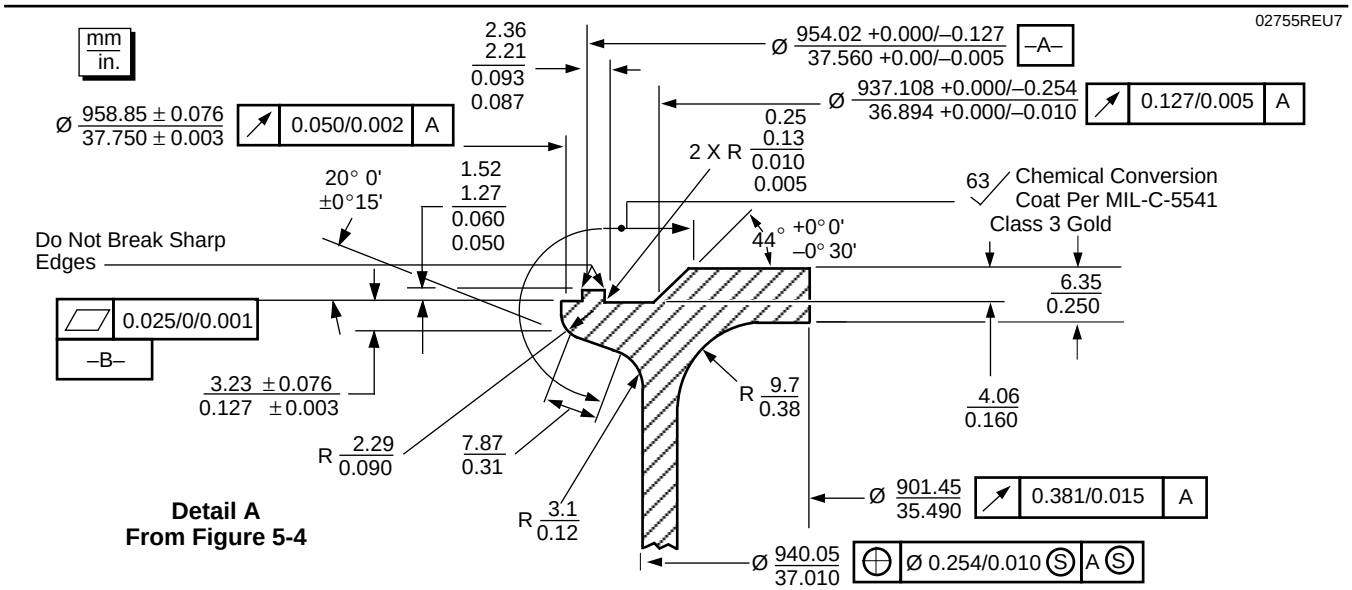

Figure 5-11. 3712C PAF Detailed Dimensions (Download Figure)

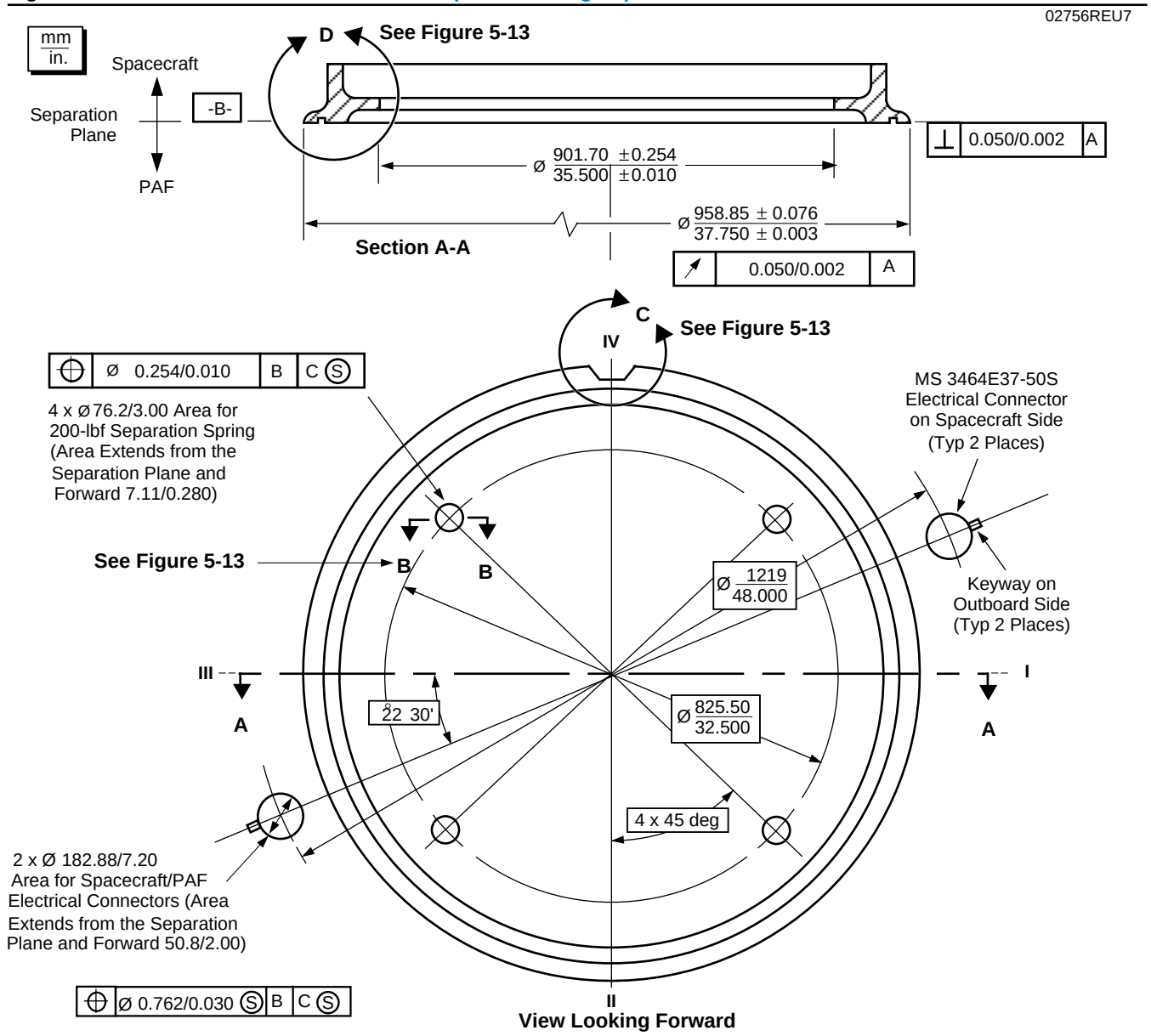

Figure 5-12. 3712C PAF Spacecraft Interface Dimensional Constraints (Download Figure)

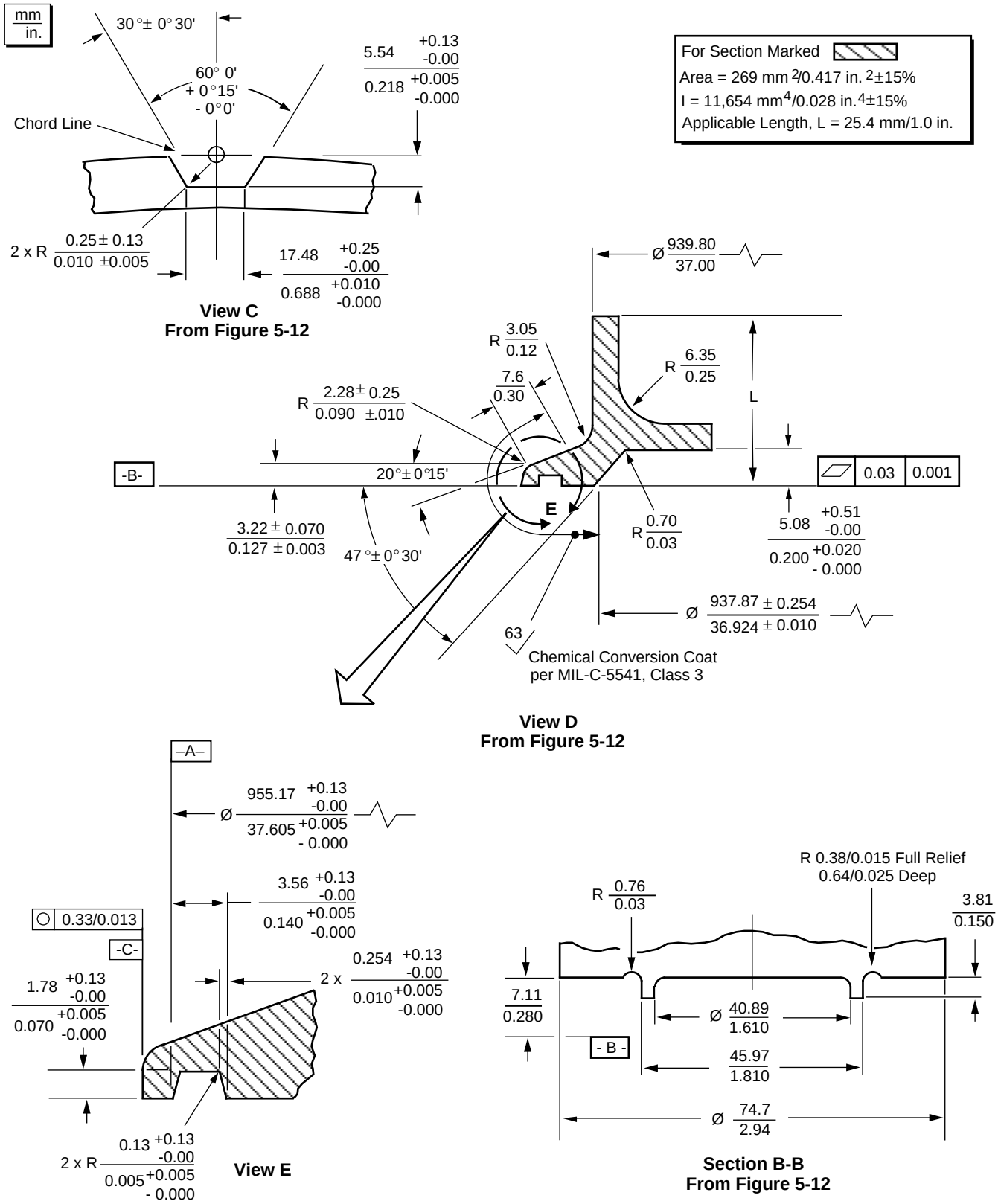

Figure 5-13. 3712C PAF Spacecraft Interface Dimensional Constraints (Views B-B, C, D and E) (Download Figure)

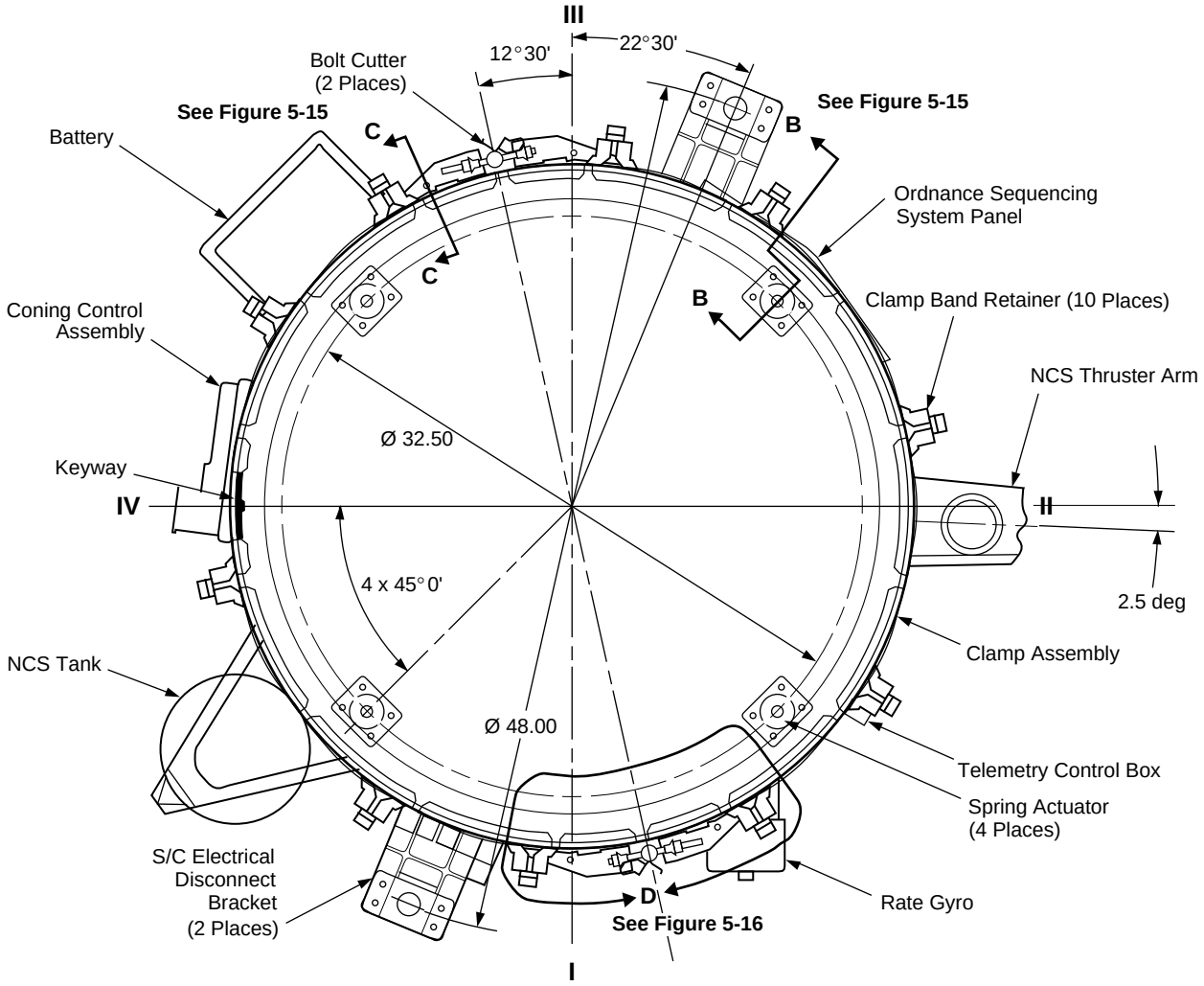

View A–A

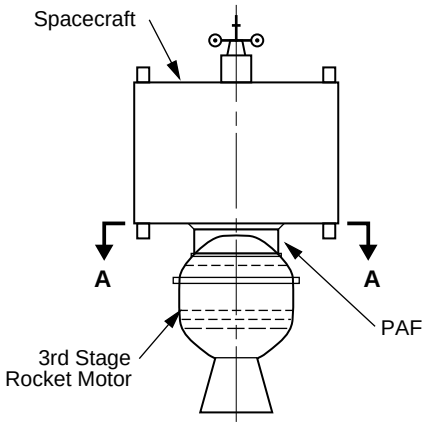

Figure 5-14. 3712 PAF Interface (Download Figure)

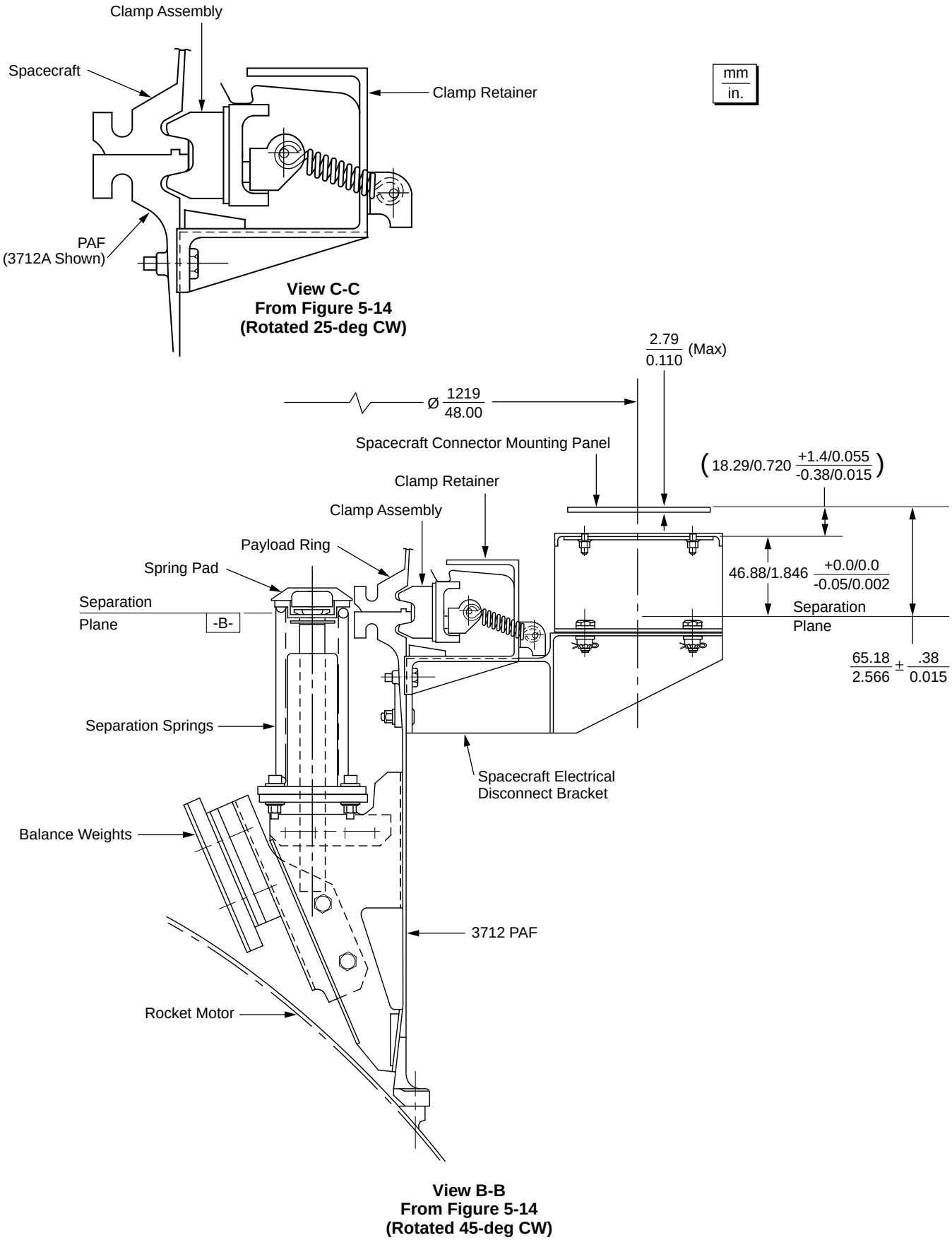

Figure 5-15. 3712 Clamp Assembly and Spring Actuator (Download Figure)

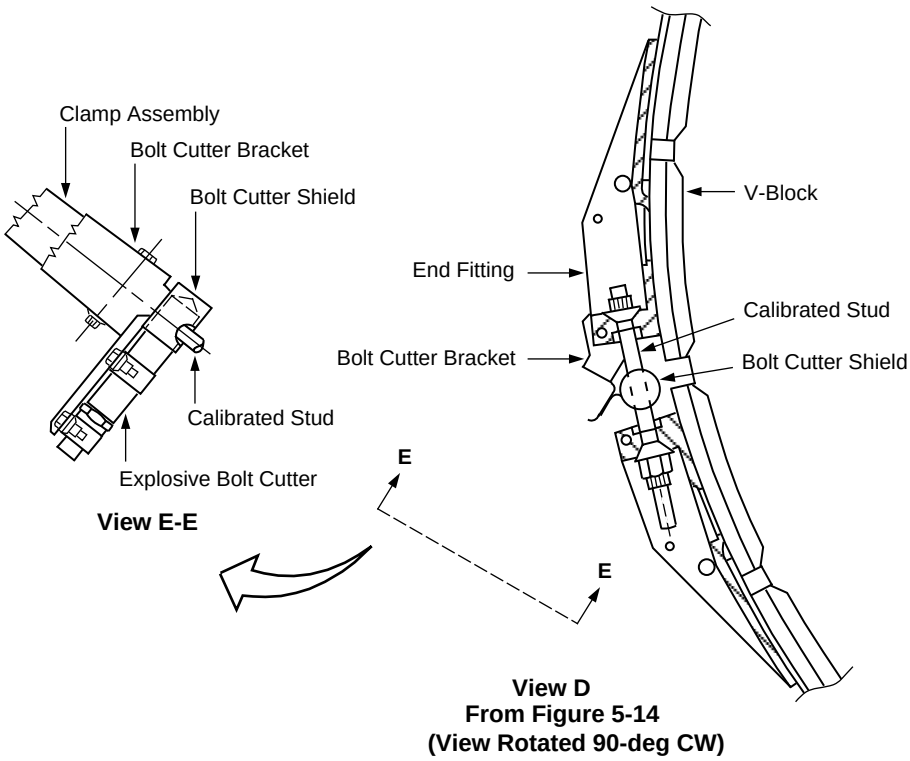

Figure 5-16. 3712 PAF Bolt Cutter Detailed Assembly (Download Figure)

fore, when the spacecraft configuration is determined, Delta Program Office will initiate a coupled loads analysis to verify that the structural capability of the launch vehicle is not exceeded.

For a spacecraft that requires a longer PAF in order to eliminate its interference with the upper stage, an optional cylindrical extension adapter with customized length can be inserted between the PAF and the upper stage. The extension adapter reduces the spacecraft allowable CG capability presented in Figure 5-3 approximately by the length of the adapter.

Although the above discussion provides a guide, the actual selection of the PAF configuration is made after discussions between the Delta Program Office and the spacecraft contractor. During these discussions, separation requirements are also considered. Separation spring forces ranging from 890 to 1512 N (200 to 340 lb) per spring are available.

The Delta program has experience utilizing non-standard spring forces up to 1700 N (400 lb); spring forces outside the standard offering may be negotiated with the Delta Program Office.

5.3 PAYLOAD ATTACH FITTINGS FOR TWO-STAGE MISSIONS

Delta offers several PAF configurations for use on two-stage missions. Selection of an appropriate PAF should be coordinated with the Delta Program Office as early as possible in the spacecraft design phase.

The PAF for two-stage missions has a separation system that is activated by a power signal from the second stage, rather than by a self-contained component, as on the three-stage PAFs.

On two-stage Delta II configurations, the spacecraft is separated by the activation of explosive nuts (for the 6019 and 6915 PAFs) or by the release of a V-band clamp assembly (for the 5624 and 6306 PAFs) followed by the action of the second-stage, helium-gas retro system. An optional secondary latch system is available that will retain the spacecraft until the energy introduced by the separation process is damped out prior to the action of the retro system. Some PAFs come standard with latch systems, while the 5624 is not available with latches. (See Sections for each PAF.) The relative separation velocity is approximately 0.3 m/s (1 ft/sec).

5.3.1 The 6019 PAF Assembly

The 6019 PAF assembly, shown in Figure 5-17, is approximately 483 mm (19 in.) high and 1524 mm (60 in.) in diameter. The one-piece structure is machined from an aluminum forging. Since this fitting was designed specifically to interface with the NASA Multimission Modular Spacecraft (MMS), users should coordinate with the Delta Program Office to ensure that the required interface stiffness is provided.

Figure 5-18 provides the estimated capability of the PAF on a 7920 launch vehicle in terms of spacecraft weight and CG location above the separation plane for two payload fairing configurations. The estimated capability is based on extrapolation of analytical results for generic spacecraft designed to the spacecraft stiffness requirements specified in Section 4.2.3.2. The capability for a specific spacecraft (with its own unique mass, size, flexibility, etc.) may vary from that presented in Figure 5-18. Therefore, after the spacecraft configuration is determined, the Delta Program Office

H54796

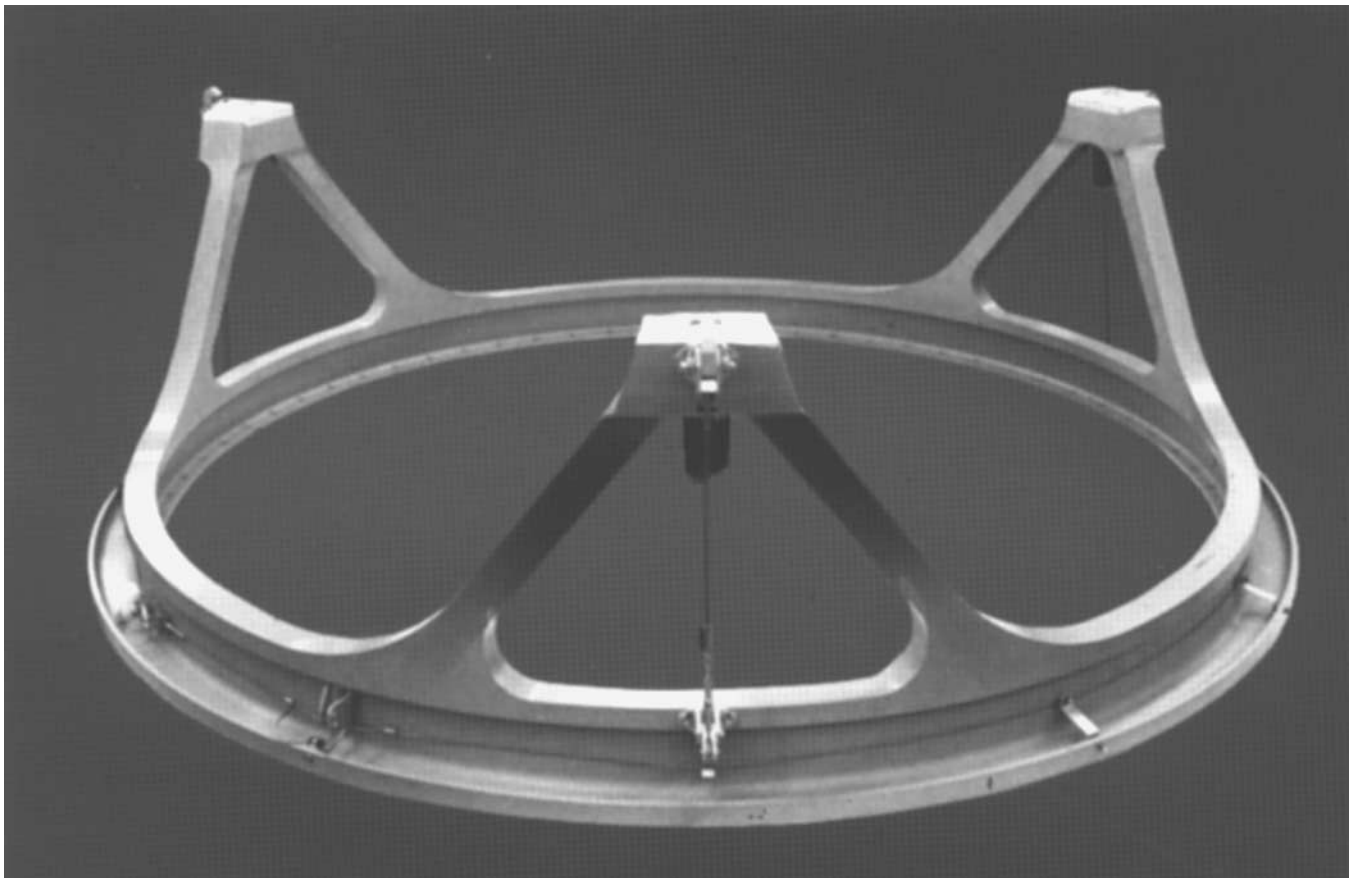

Figure 5-17. 6019 PAF Assembly

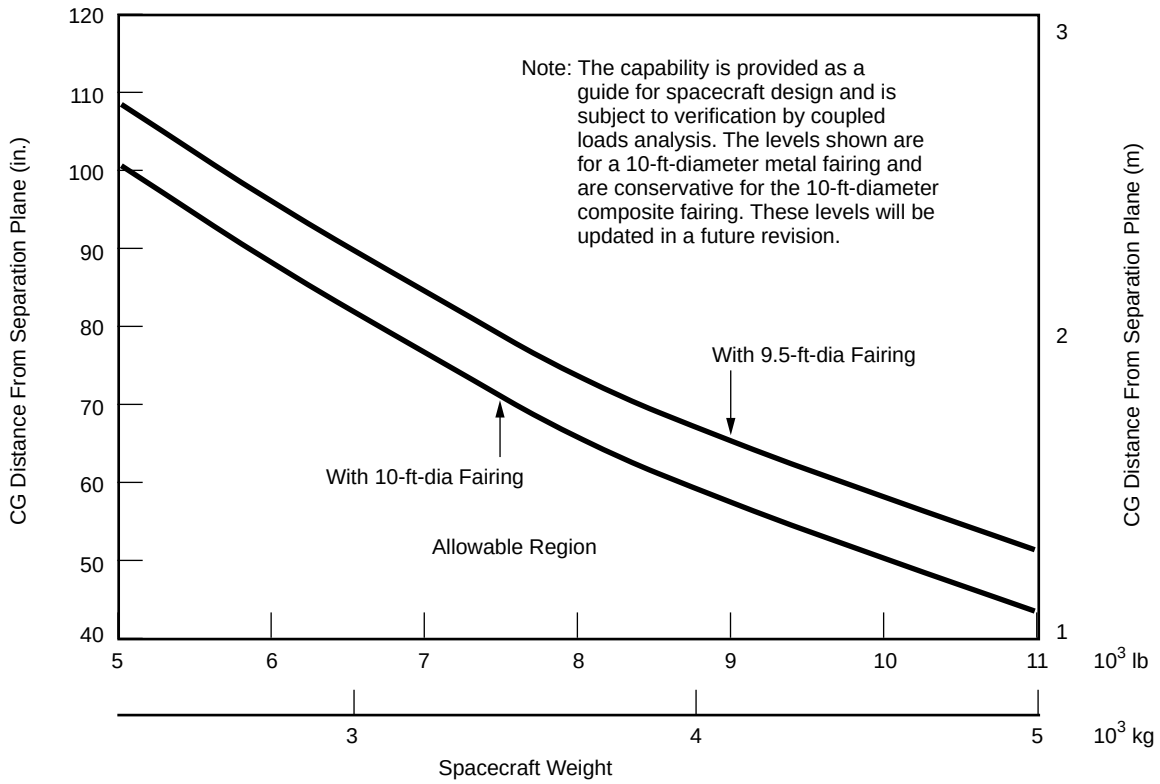

Figure 5-18. Capability of the 6019 PAF on 7920 Vehicle (Download Figure)

will initiate a coupled loads analysis to verify that the structural capability of the launch vehicle is not exceeded.

The base of the fitting is attached to the forward ring of the second stage. The spacecraft is fastened to the 1524-mm (60 in.) PAF mating diameter at three equally spaced hard points with 15.9-mm (0.625 in.) bolts that are preloaded to 53,380 N (12,000 lb) tension. Separation of the spacecraft from the launch vehicle occurs when three explosive nuts are activated and the second stage is backed away by the helium retro system.

The spacecraft interface is shown in Figures 5-19 and 5-20. It should be noted that the launch vehicle requires access on the spacecraft side of the separation plane for installation of the three attach bolts and bolt catcher assemblies. Upon separation, the bolts and catcher assemblies are retained by the spacecraft. For the 6019 PAF a two-step release system consisting of the three explosive nuts and a secondary latch system is employed. This requires that a small lip (MDC-provided) be installed on the spacecraft at each of the attach bolt locations (Figures 5-19, 5-21, and 5-22). Following activation of the explosive nuts, three retaining latches are released and the second stage is retro-fired so that there is a minimal tip-off of the spacecraft.

5.3.2 The 6915 PAF Assembly

The 6915 PAF assembly (Figure 5-23) is approximately 381 mm (15 in.) high and 1743 mm (68.6 in.) in diameter. This one-piece structure is machined from an aluminum forging.

Figure 5-24 provides the estimated capability of the PAF on the 7920 launch vehicle in terms of spacecraft weight and CG location above the separation plane for two payload fairing configurations.

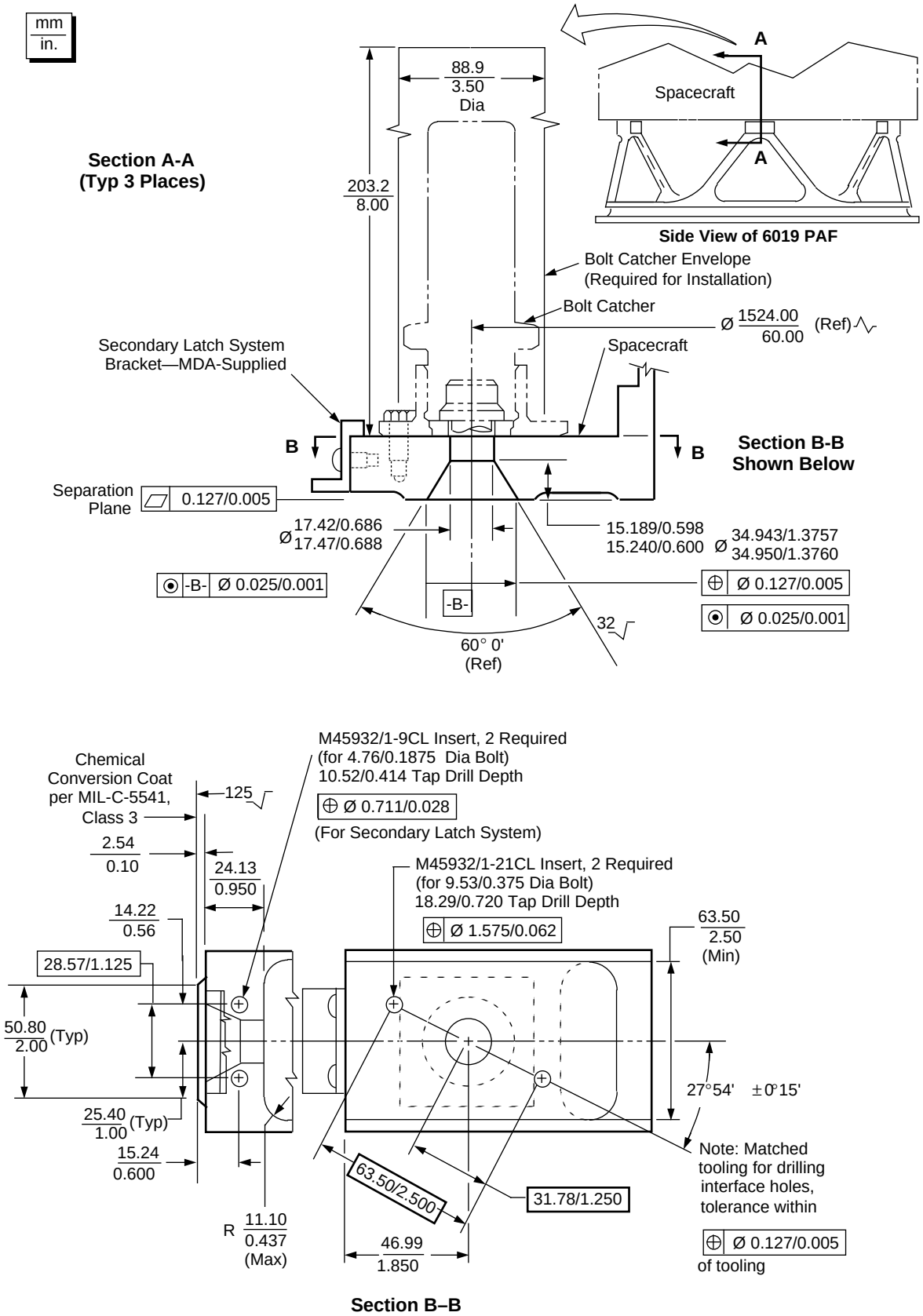

Note: Constraints are the responsibility of the spacecraft agency

Figure 5-19. 6019 PAF Spacecraft Interface Dimensional Constraints (Download Figure)

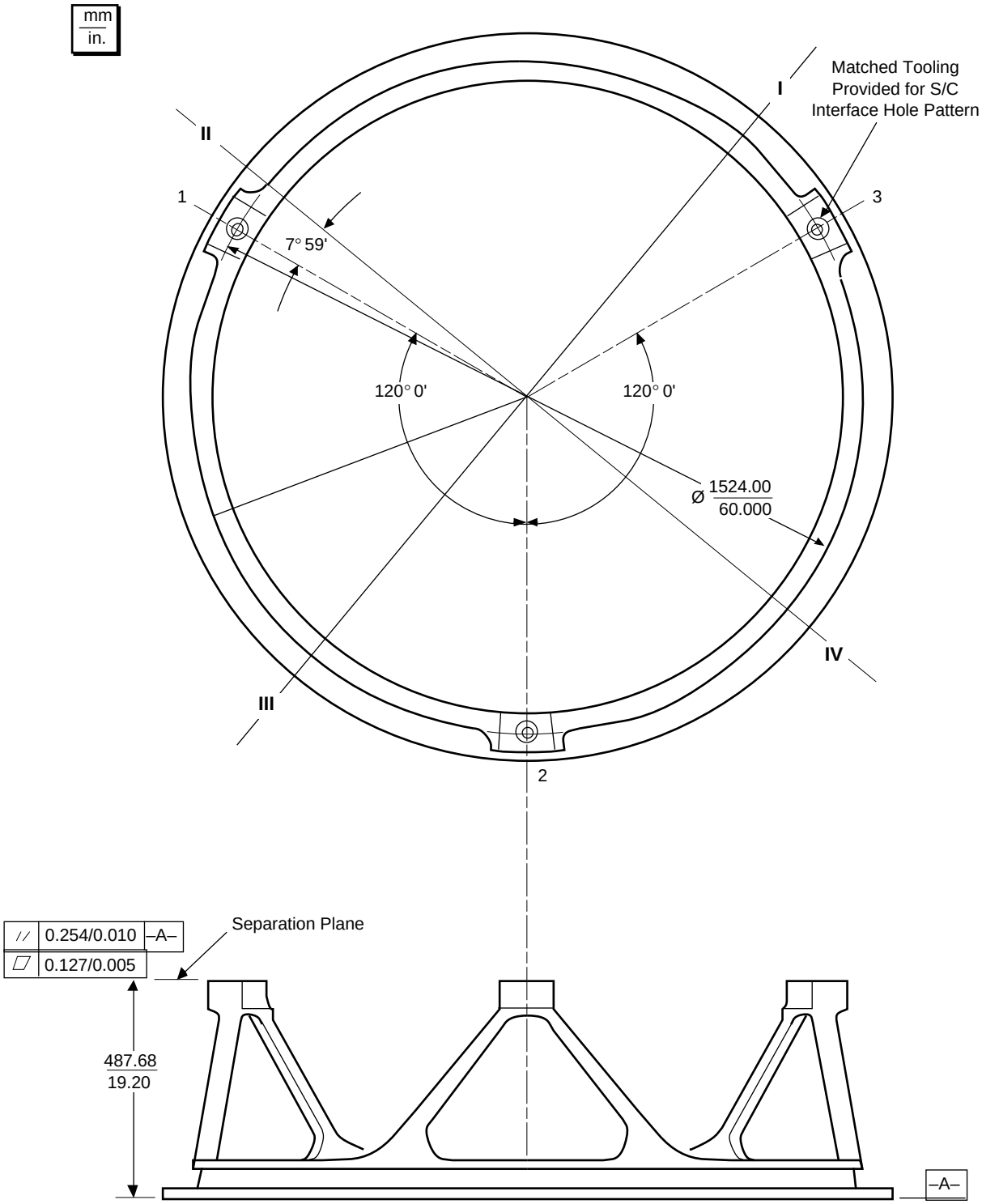

Figure 5-20. 6019 PAF Detailed Assembly (Download Figure)

02763REU7

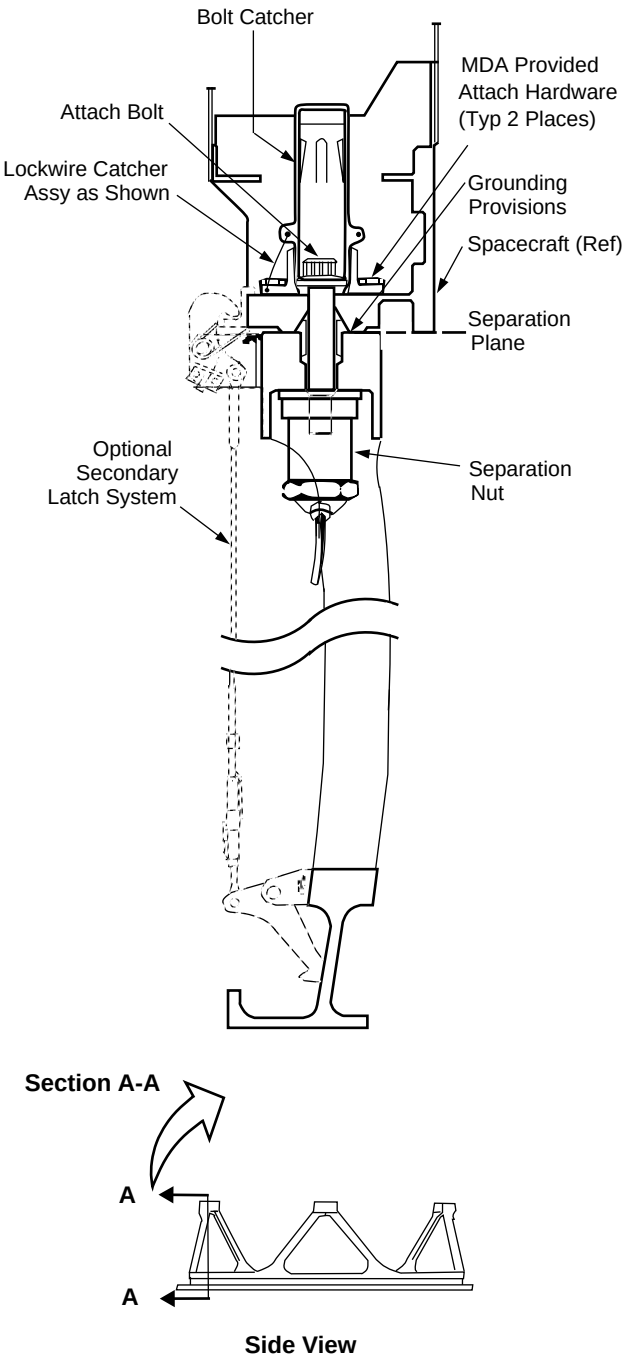

02764REU7

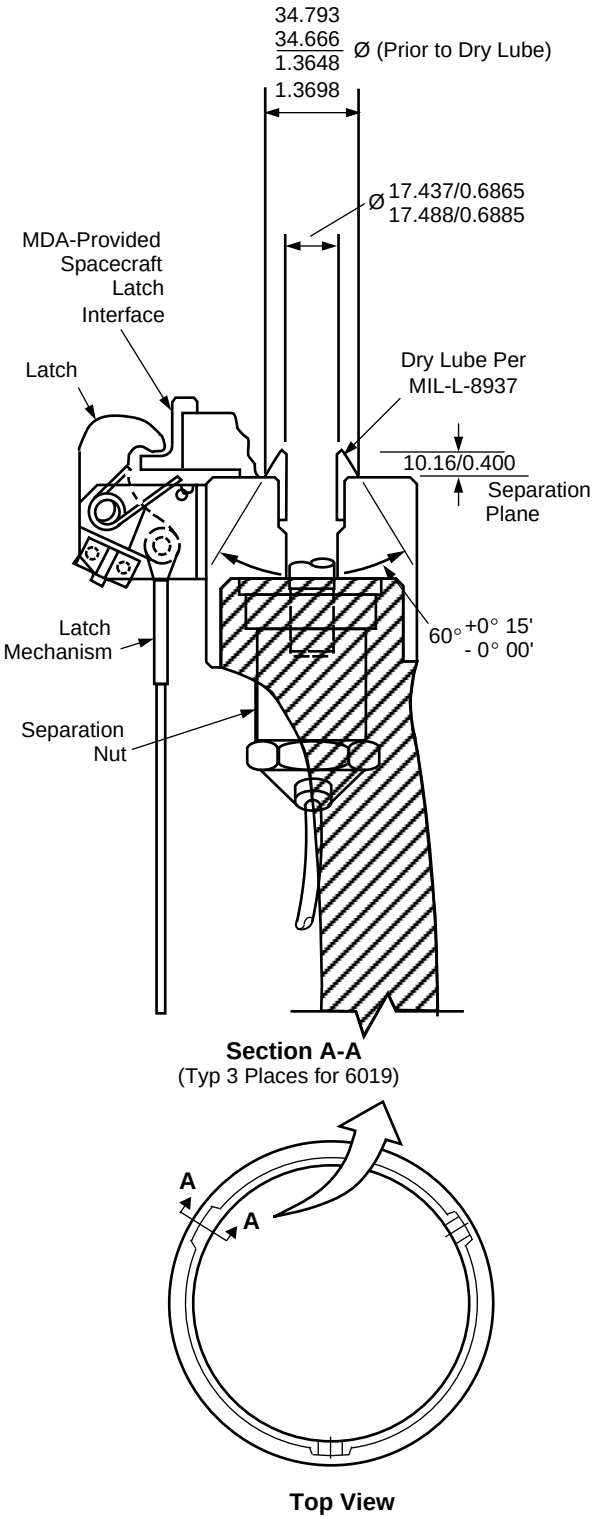

Figure 5-21. 6019 PAF Spacecraft Assembly (Download Figure)

Figure 5-22. 6019 PAF Detailed Dimensions (Download Figure)

DAC115974

H54795

Figure 5-23. 6915 PAF

02741REU7

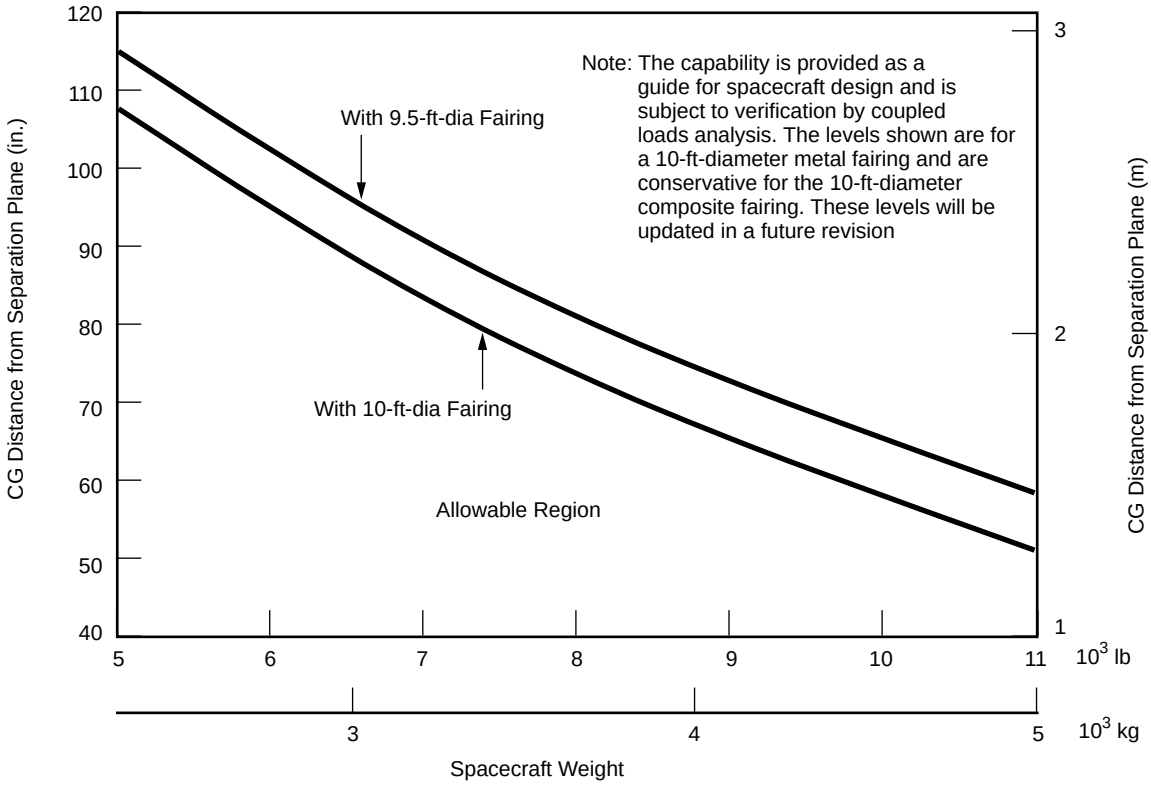

Figure 5-24. Capability of the 6915 PAF on 7920 Vehicle (Download Figure)

The estimated capability is based on extrapolation of analytical results for generic spacecraft designed to the spacecraft stiffness requirements specified in Section 4.2.3.2. The capability for a specific spacecraft (with its own unique mass, size, flexibility, etc.) may vary from that presented in Figure 5-24. Therefore, when the spacecraft configuration is determined, the Delta Program Office will initiate a coupled loads analysis to verify that the structural capability of the launch vehicle is not exceeded.

The base of the PAF is attached to the forward ring of the second stage. Matched tooling is provided for the hardpoint interface and the mechanical/elecctrical interfaces, if required. The spacecraft is fastened to the 1742.6-mm (68.6-in.) PAF mating diameter at four equally spaced hard points with 15.9-mm (0.625-in.) bolts that are preloaded to 53,380-N (12,000-lb) tension. The separation of the spacecraft from the launch vehicle occurs when four explosive nuts are activated and the second stage is backed away by spring actuators.

The spacecraft interface is defined in Figures 5-25 through 5-29. Matched tooling is provided for the hardpoint interface and the meachanical/electrical interfaces, if required. It should be noted that the launch vehicle requires access on the spacecraft side of the separation plane for installation of the four attach bolts and bolt catcher assemblies. Upon separation, the bolts and catcher assemblies are retained by the spacecraft. For spacecraft systems requiring a minimal tip-off rate at separation, the spring actuators are removed and a two-step release system consisting of four explosive nuts and a secondary latch is employed. Use of this system requires that a small lip (MDA-provided) be added to the spacecraft at each of the attach bolt locations (Figures 5-27 and 5-28). Following activation of the four explosive nuts, the four retaining latches are released and the second stage is retro-fired. This system limits the tip-off imparted to the spacecraft.

5.3.3 The 6306 PAF Assembly

The 6306 PAF assembly (Figures 5-30 through 5-34) is approximately 152.4 mm (6 in.) high and 1600 mm (63 in.) in diameter. This one-piece structure is machined from an aluminum forging.

Figure 5-35 provides the estimated capability of the PAF on the 7920 launch vehicle in terms of spacecraft weight and CG location above the separation plane for different payload fairing configurations. The estimated capability is based on extrapolation of analytical results for generic spacecraft designed to the spacecraft stiffness requirements specified in Section 4.2.3.2. The capability for a specific spacecraft (with its own unique mass, size, flexibility, etc.) may vary from that presented in Figure 5-35. Therefore, when the spacecraft configuration is determined, the Delta Program Office will initiate a coupled loads analysis to verify that the structural capability of the launch vehicle is not exceeded.

The base of the PAF is attached to the forward ring of the second stage. The spacecraft is fastened to the 1600 mm (63 in.) PAF mating diameter with a V-band clamp assembly that is preloaded to 34,250 N (7,700 lb). Separation of the spacecraft from the launch vehicle occurs when the V-band clamp assembly is released and the second stage is backed away by the helium retro system. A two-step release system is employed, which requires the addition of four holes in the spacecraft interface ring (Figure 5-36) to mate with PAF-mounted lateral restraints. Following release of the V-band clamp, the interaction between the spacecraft and the retaining latches, structure, and damping springs settle the spacecraft rates (damping is provided by spacecraft-provided separation springs or launch vehicle-provided damping devices). Thirty seconds later, the three retaining latches are retracted and the second-stage retro system is activated backing the

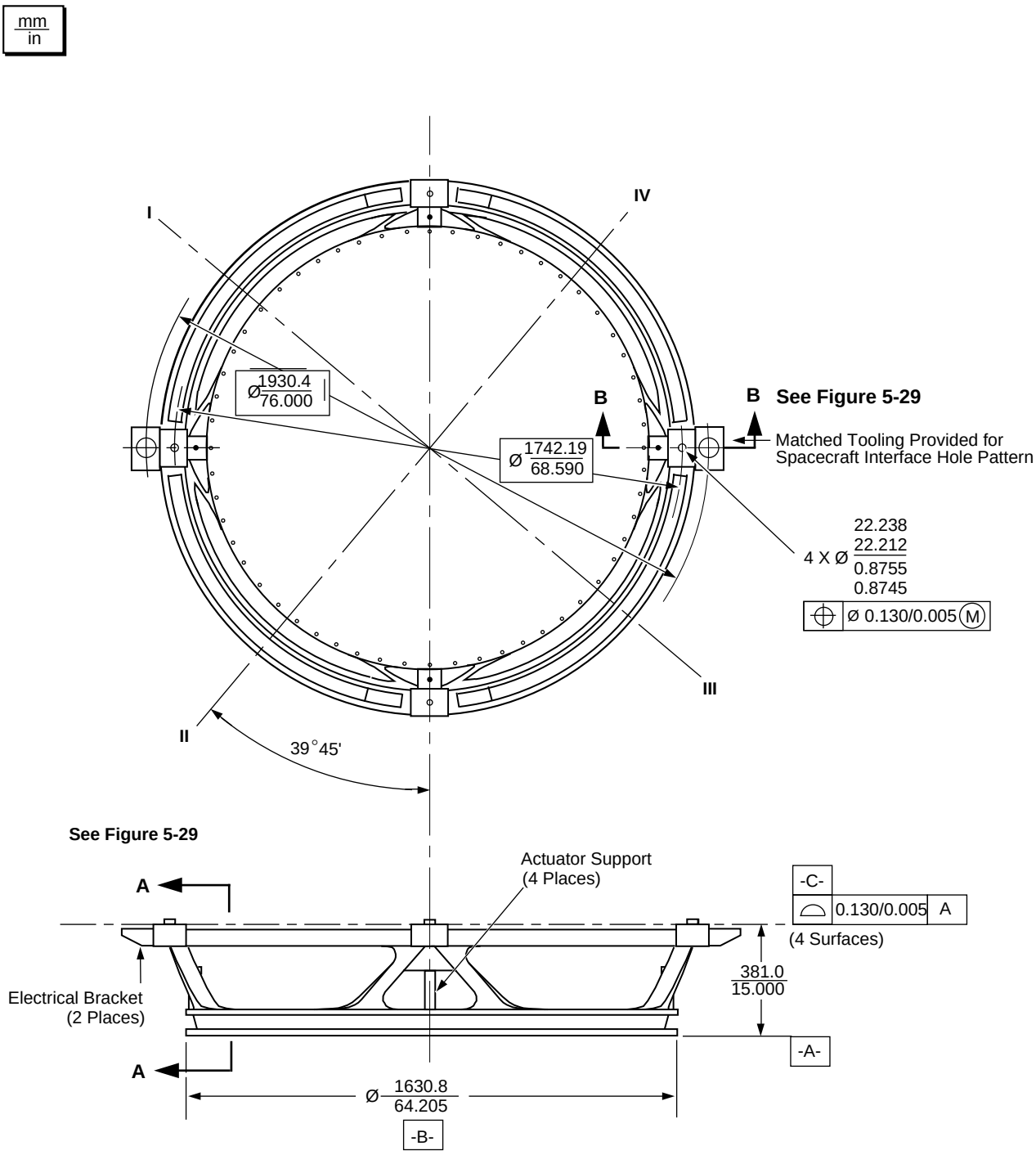

Figure 5-25. 6915 PAF Detailed Assembly (Download Figure)

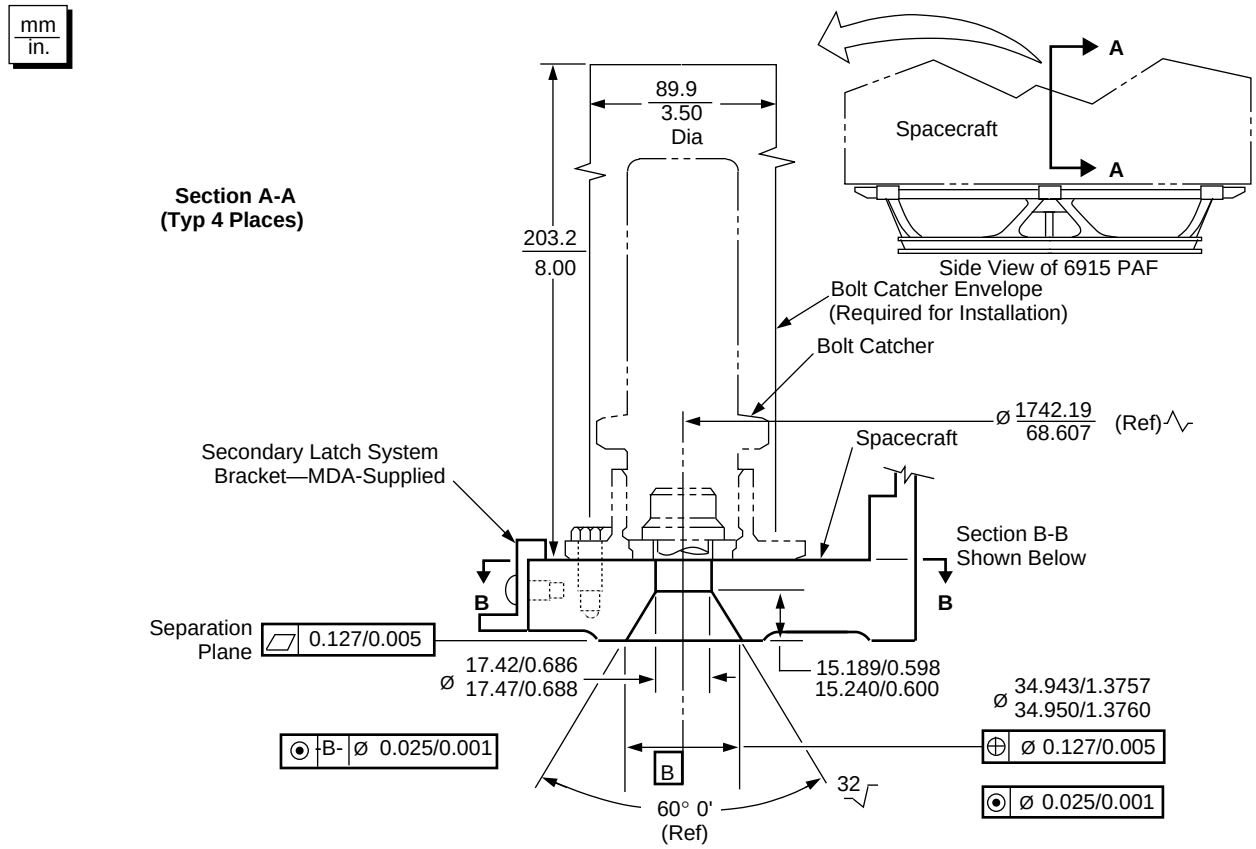

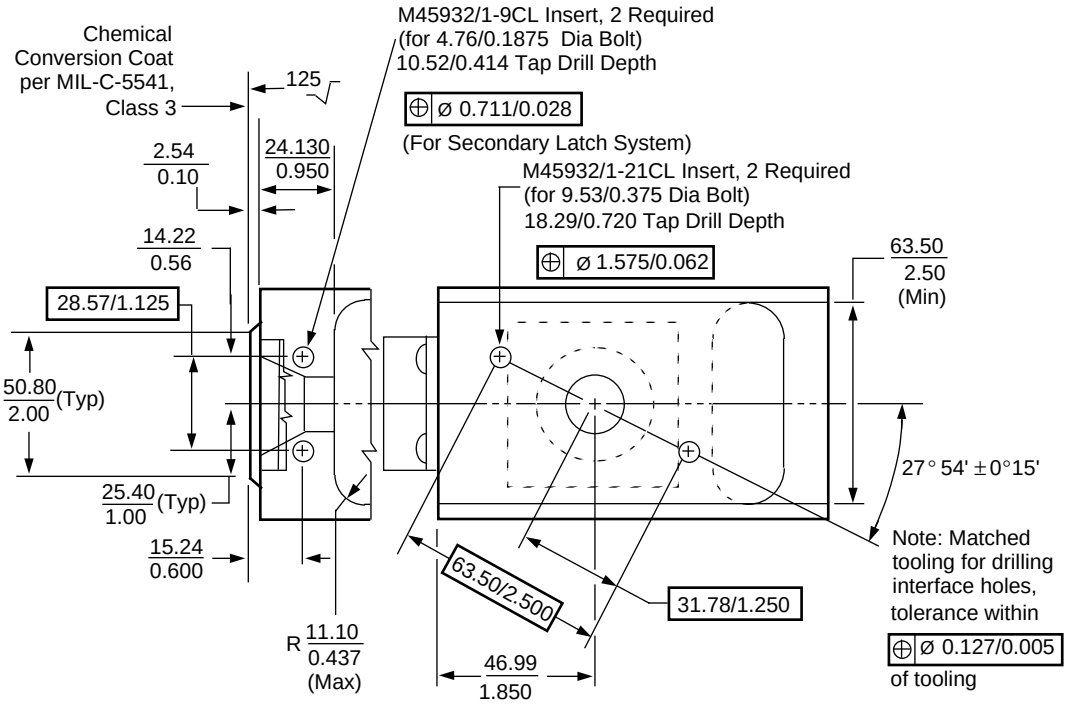

Section B–B

Note: Constraints are the responsibility of the spacecraft agency

Figure 5-26. 6915 PAF Spacecraft Interface Dimensional Constraints (Download Figure)

02768REU7

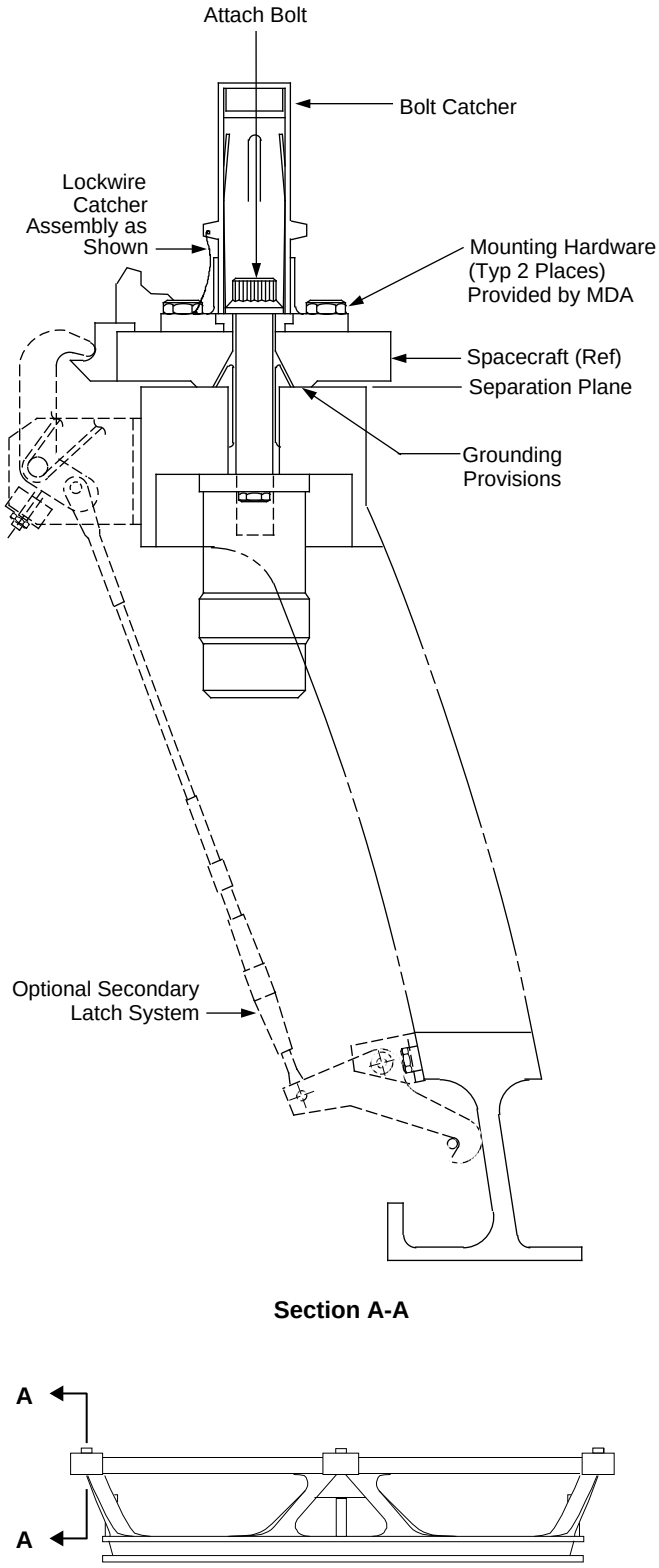

Figure 5-27. 6915 PAF Spacecraft Assembly (Download Figure)

02767REU7

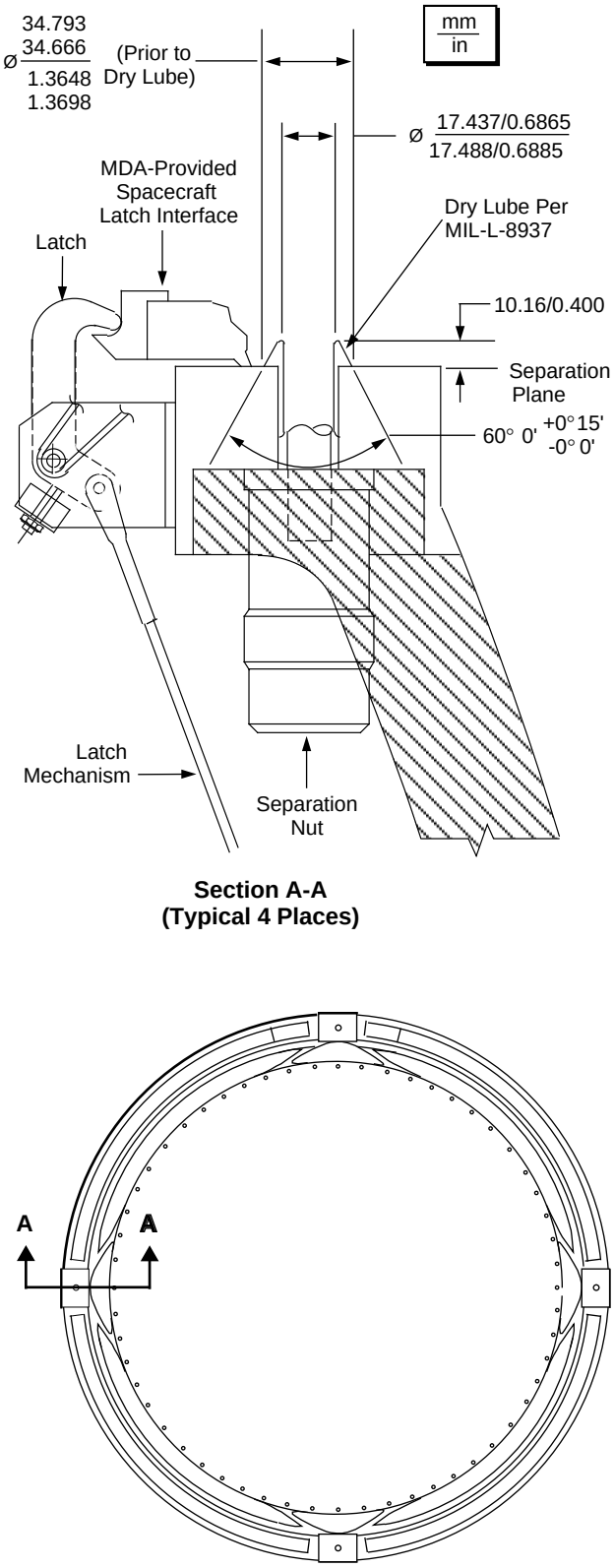

Figure 5-28. 6915 PAF Detailed Dimensions (Download Figure)

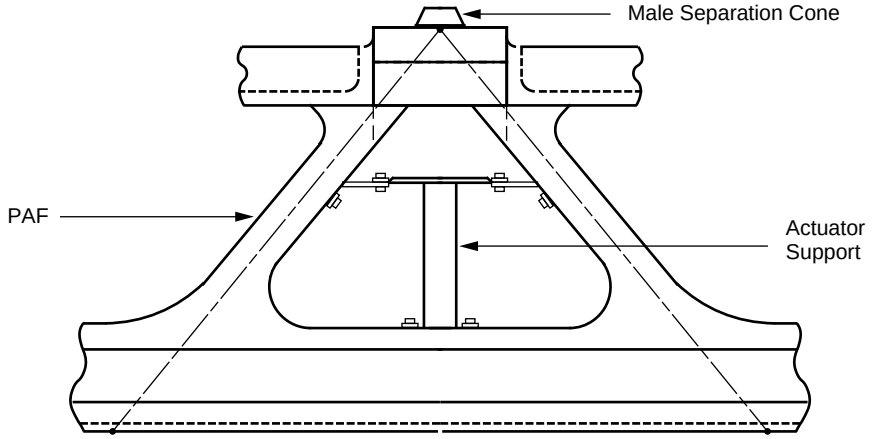

View A-A
(From Figure 5-25)

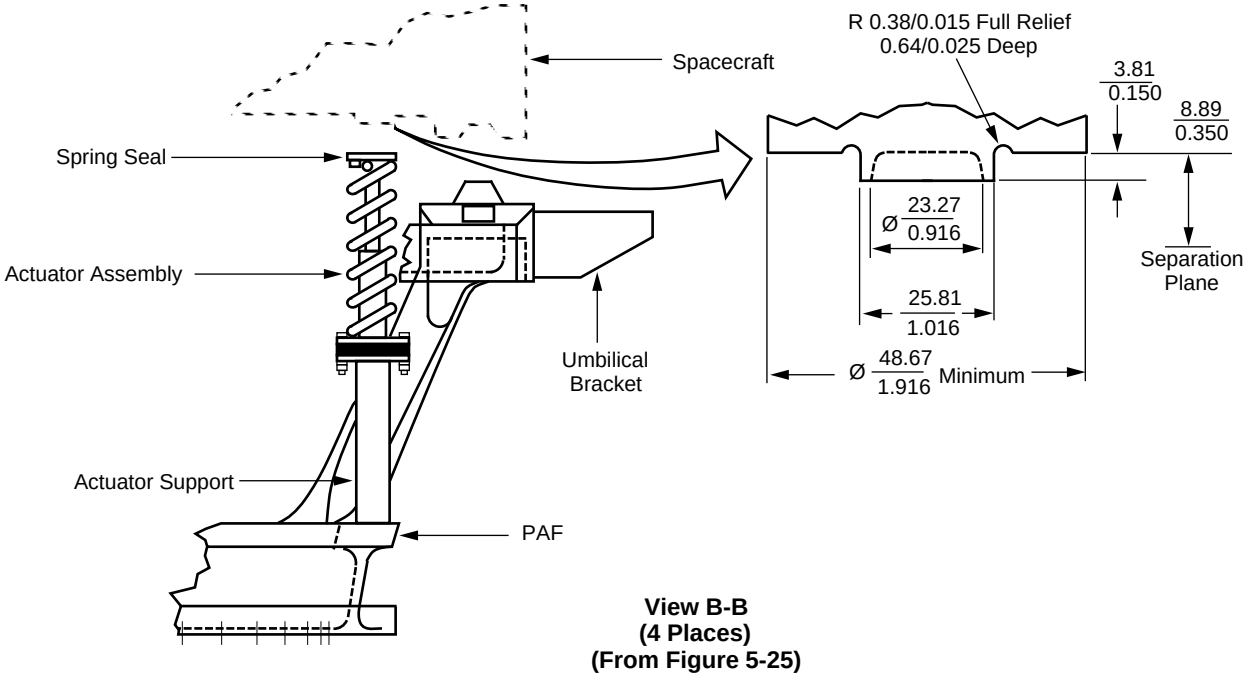

View B-B
(4 Places)
(From Figure 5-25)

Figure 5-29. Actuator Assembly Installation – 6915 PAF (Download Figure)

Figure 5-30. 6306 PAF Assembly

second stage away from the spacecraft. 'The second stage then performs a contamination and collision avoidance maneuver (CCAM) to remove the stage from the vicinity of the spacecraft, followed by a propellant depletion burn to safe the stage.

5.3.4 The 5624 PAF Assembly

The 5624 PAF assembly (Figures 5-37 through 5-41) is approximately 609.6 mm (24 in.) high and 1422.4 mm (56 in.) in diameter. This one-piece structure is machined from an aluminum forging.

Figure 5-42 provides the estimated capability of the PAF on the 7920 launch vehicle in terms of spacecraft weight and CG location above the separation plane for different payload fairing configurations. The estimated capability is based on extrapolation of analytical results for generic spacecraft designed to the spacecraft stiffness requirements specified in Section 4.2.3.2. The capability for a specific spacecraft (with its own unique mass, size, flexibility, etc.) may vary from that presented in Figure 5-42. Therefore, when the spacecraft configuration is determined, the Delta Program Office will initiate a coupled loads analysis to verify that the structural capability of the launch vehicle is not exceeded.

The base of the PAF is attached to the forward ring of the second stage. The spacecraft is fastened to the 1422.4 mm (56 in.) PAF mating diameter with a V-band clamp assembly that is preloaded to 17,350 N (3900 lb). The design of this PAF does not allow for a spacecraft side latch. Separation of the spacecraft from the launch vehicle occurs when the V-band clamp assembly is released and four spring actuators impart a relative separation velocity between the spacecraft and the launch vehicle.

5.4 NEW PAFs

New PAFs are currently being studied. The design of these PAFs takes into account the use of

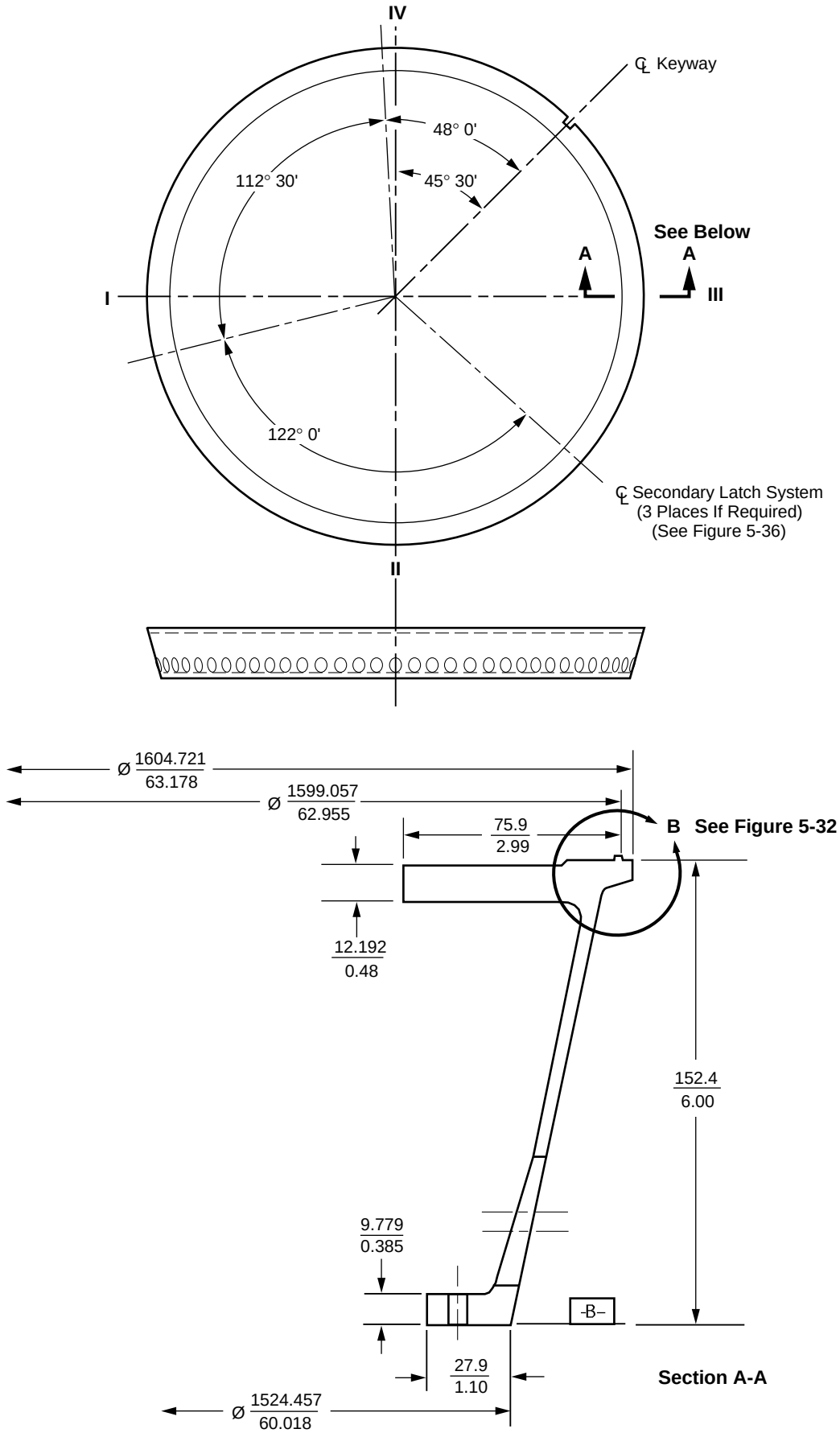

Figure 5-31. 6306 PAF Detailed Dimensions (Download Figure)

mm
in.

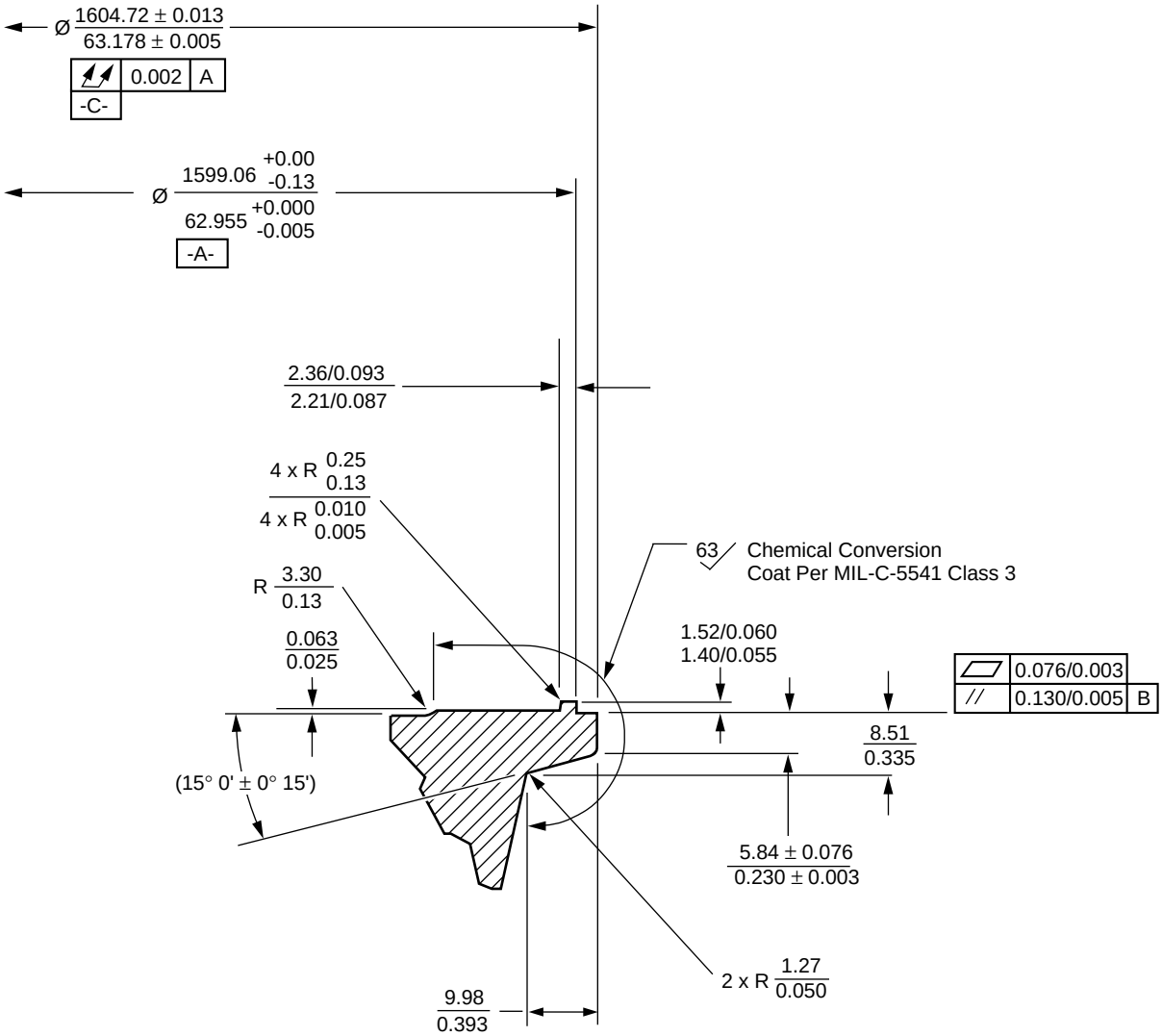

View B
From Figure 5-31

Figure 5-32. 6306 PAF Detailed Dimensions (Download Figure)

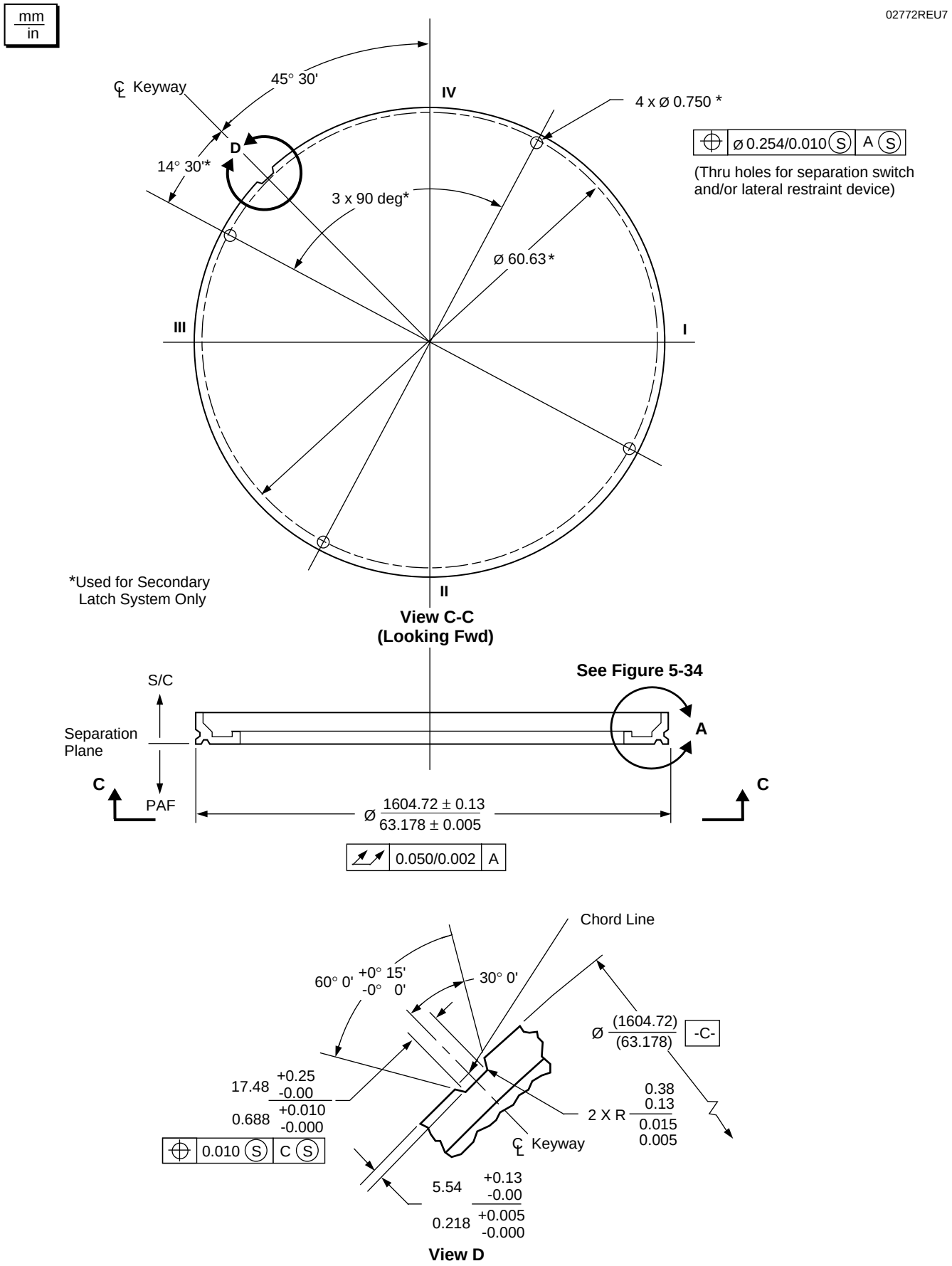

Figure 5-33. 6306 PAF Spacecraft Interface Dimensional Constraints (Download Figure)

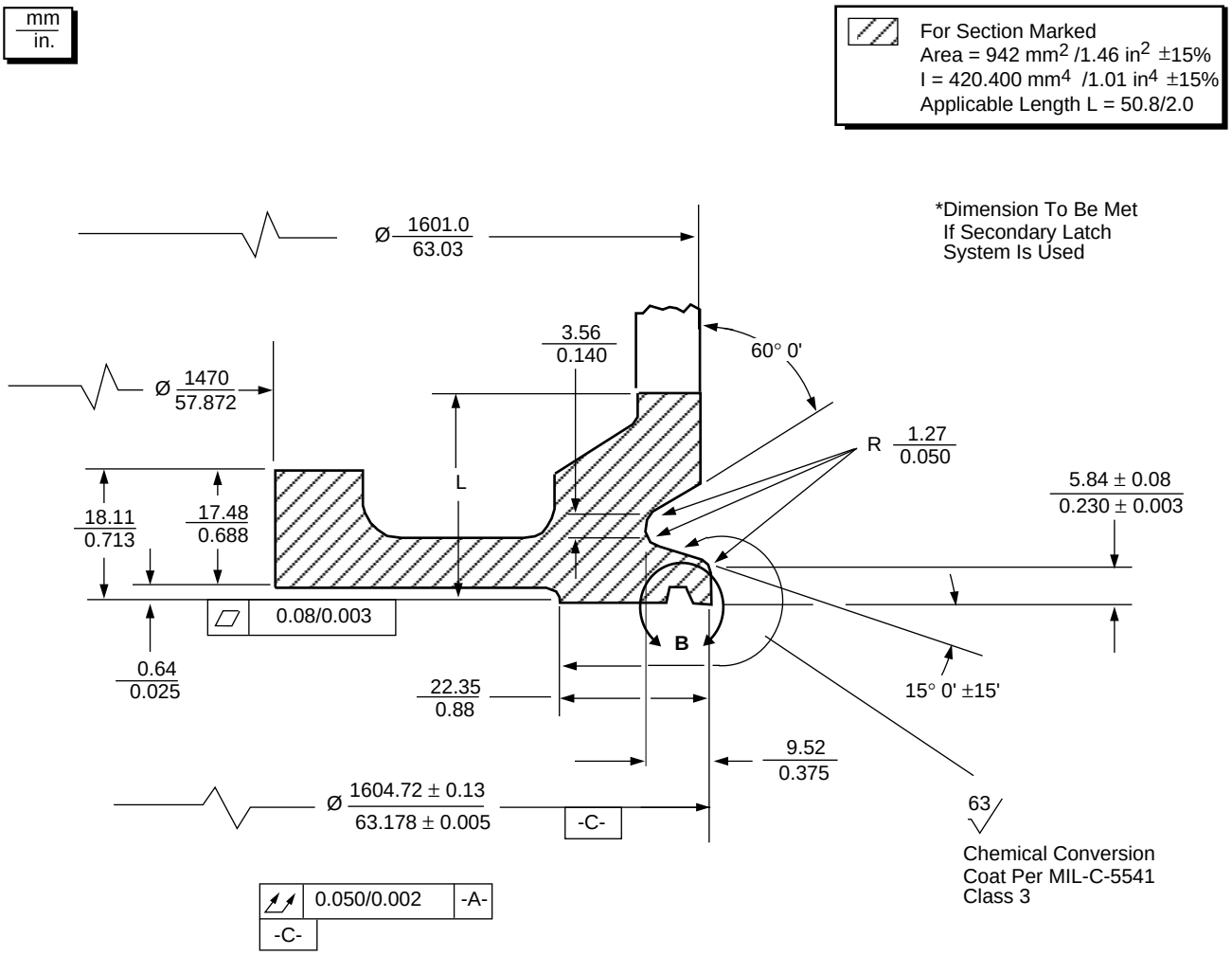

View A
From Figure 5-33

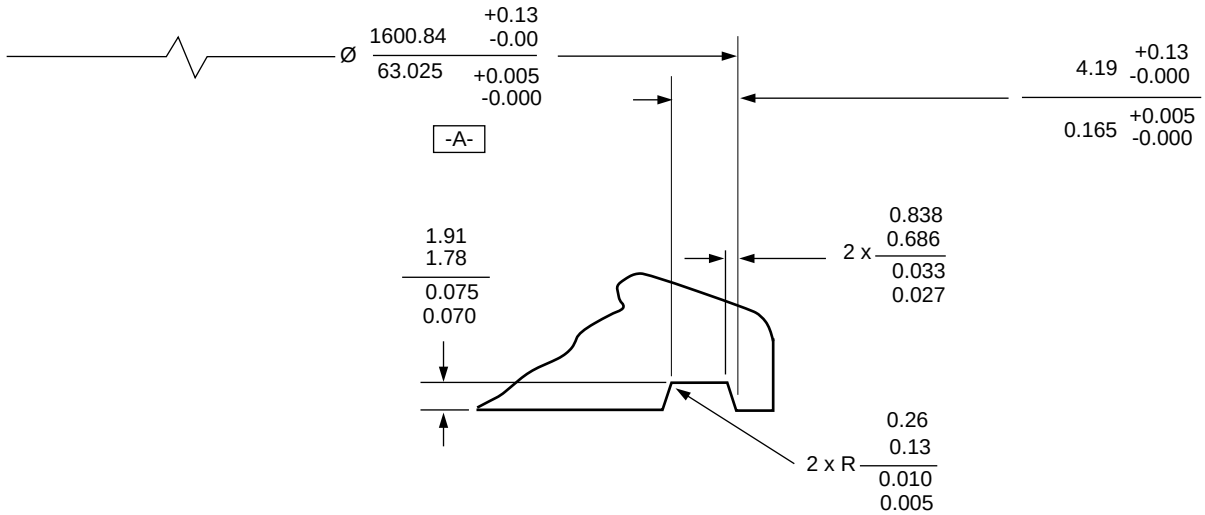

View B

Figure 5-34. 6306 PAF Spacecraft Interface Dimensional Constraints (Download Figure)

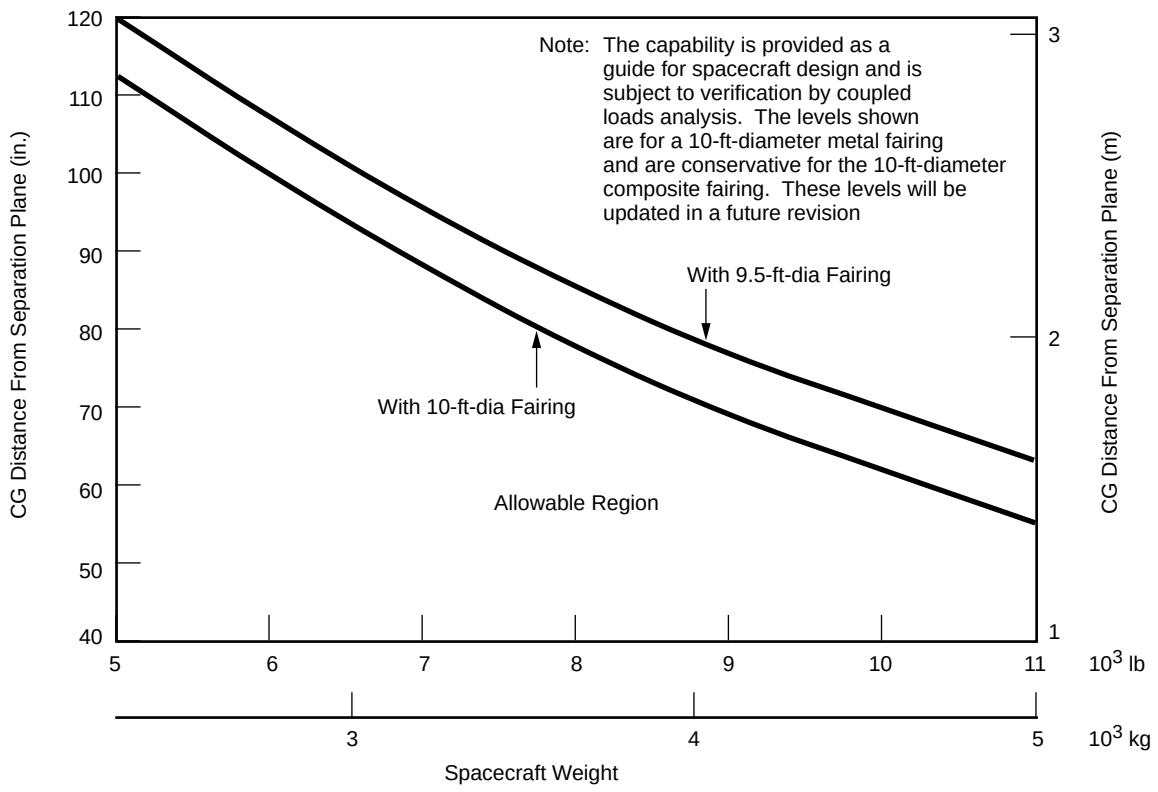

Figure 5-35. Capability of the 6306 PAF on 7920 Vehicle (Download Figure)

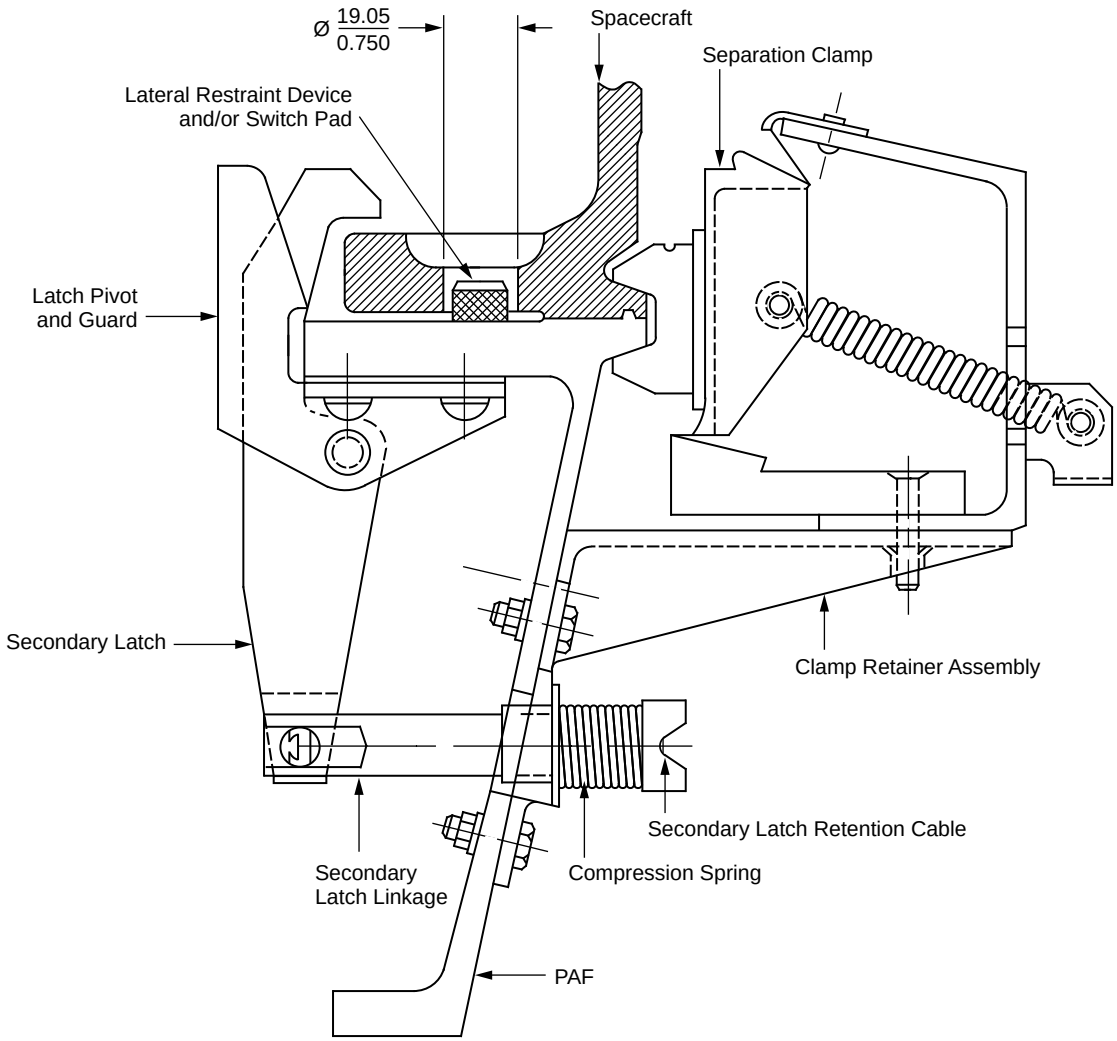

Section A-A

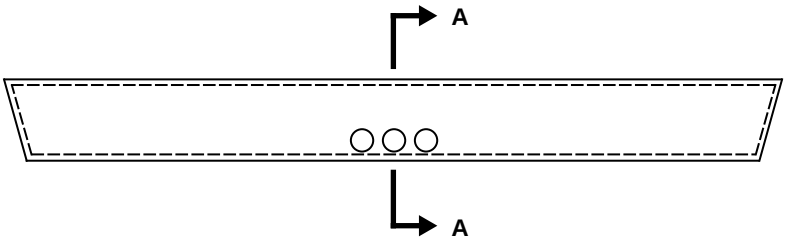

Figure 5-36. 6306 PAF Secondary Latch (Download Figure)

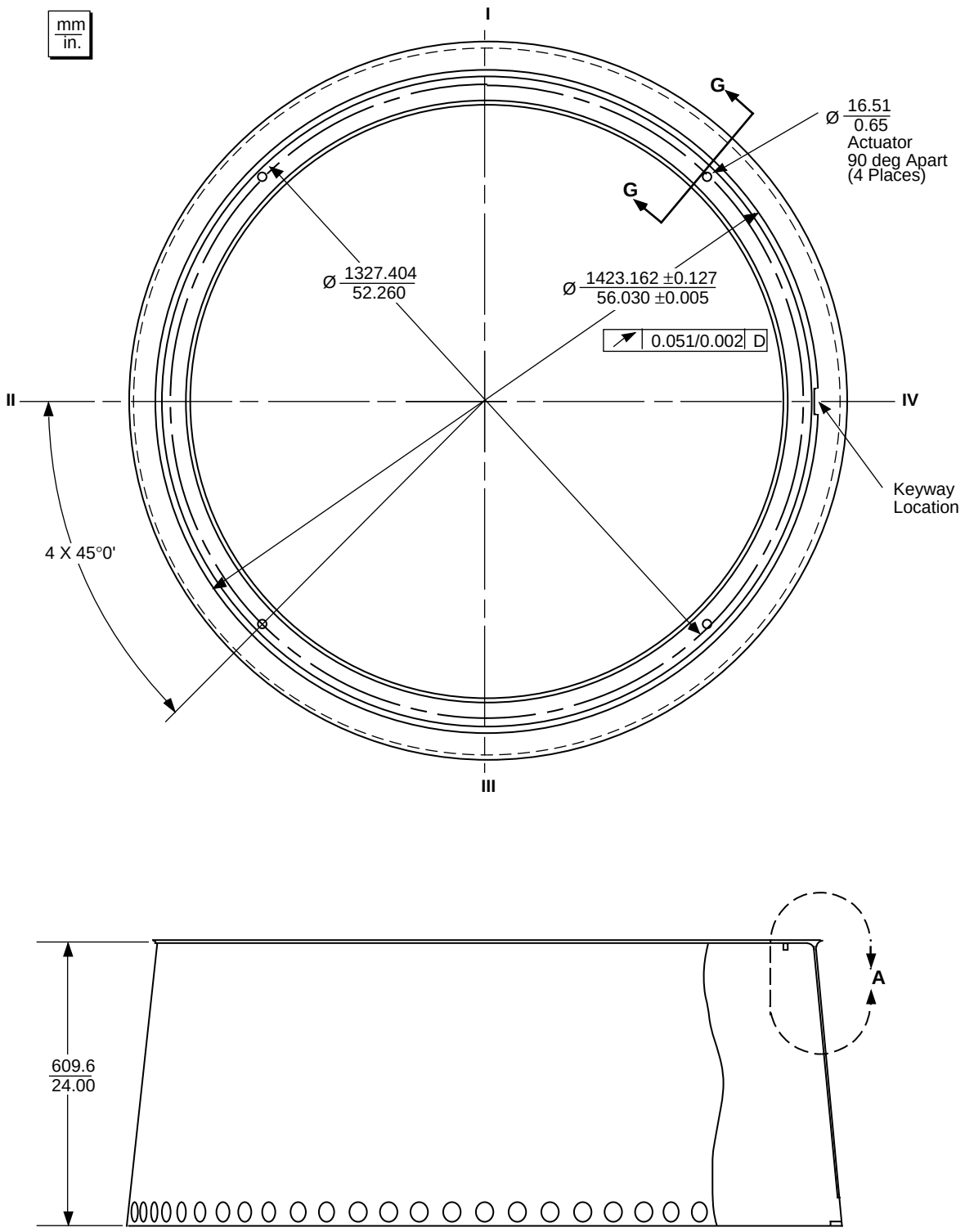

Figure 5-37. 5624 PAF Detailed Assembly (Download Figure)

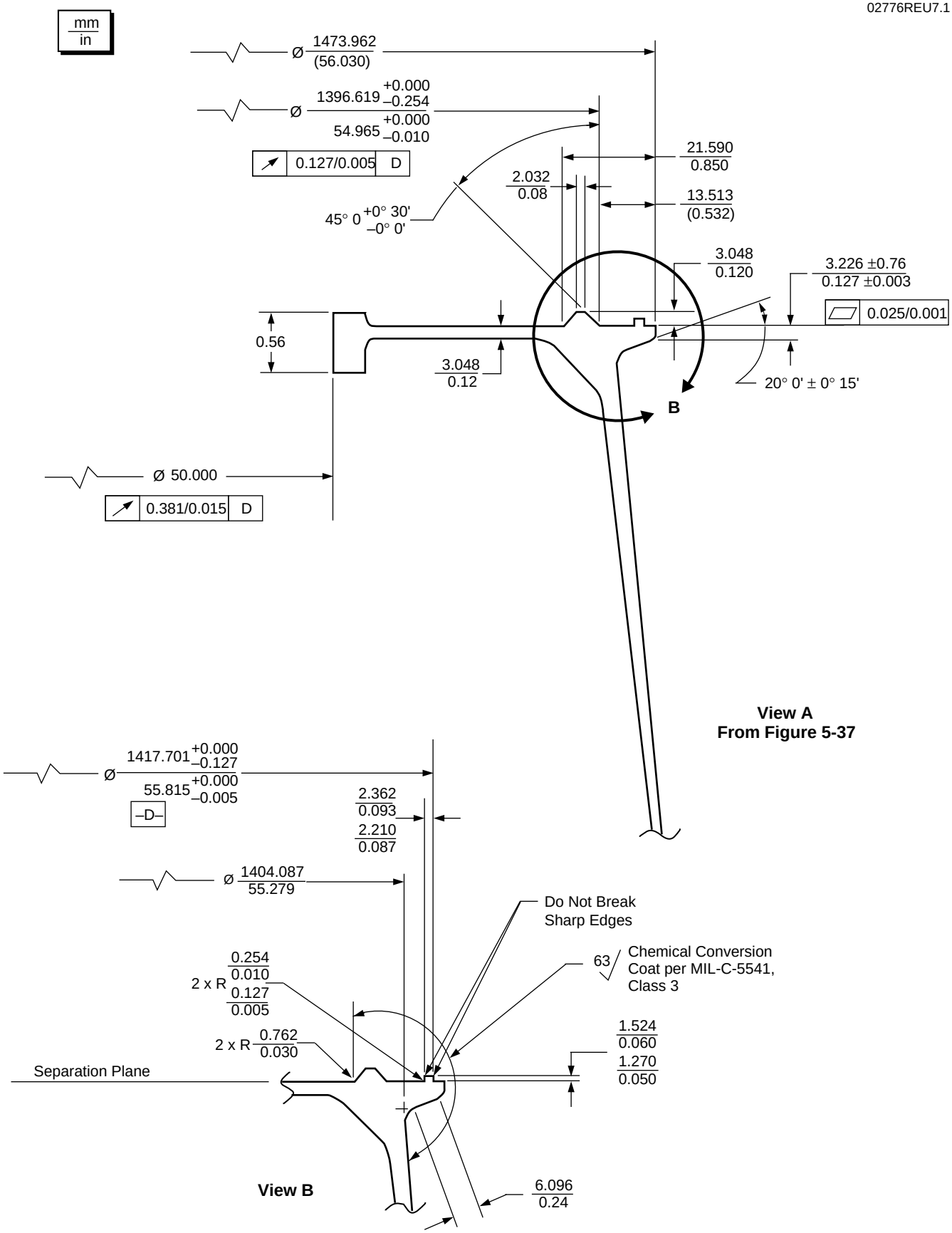

Figure 5-38. 5624 PAF Detailed Dimensions (Download Figure)

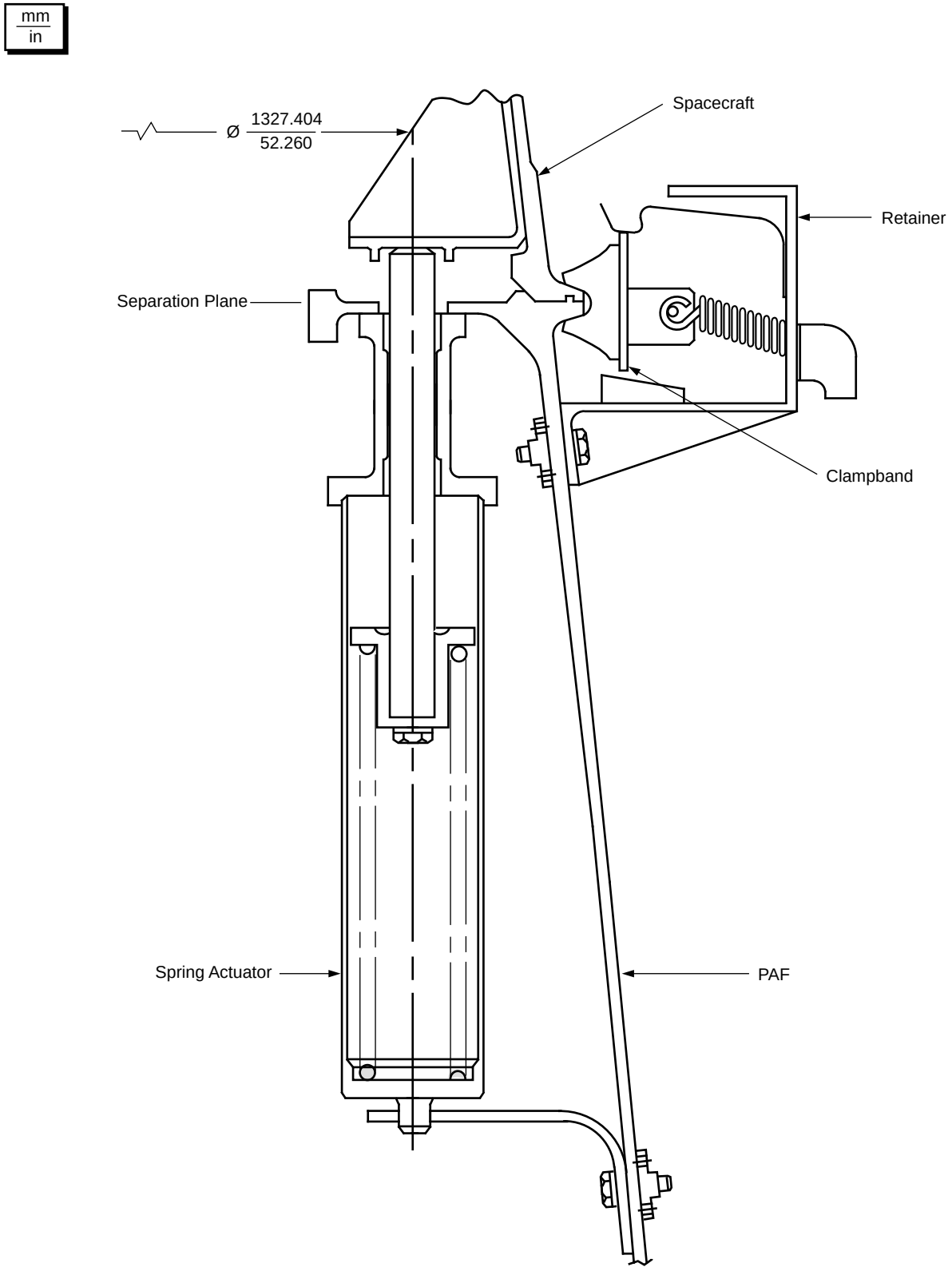

View G-G
Rotated 45-deg CCW

Figure 5-39. 5624 PAF Clamp Assembly and Spring Actuator (Download Figure)

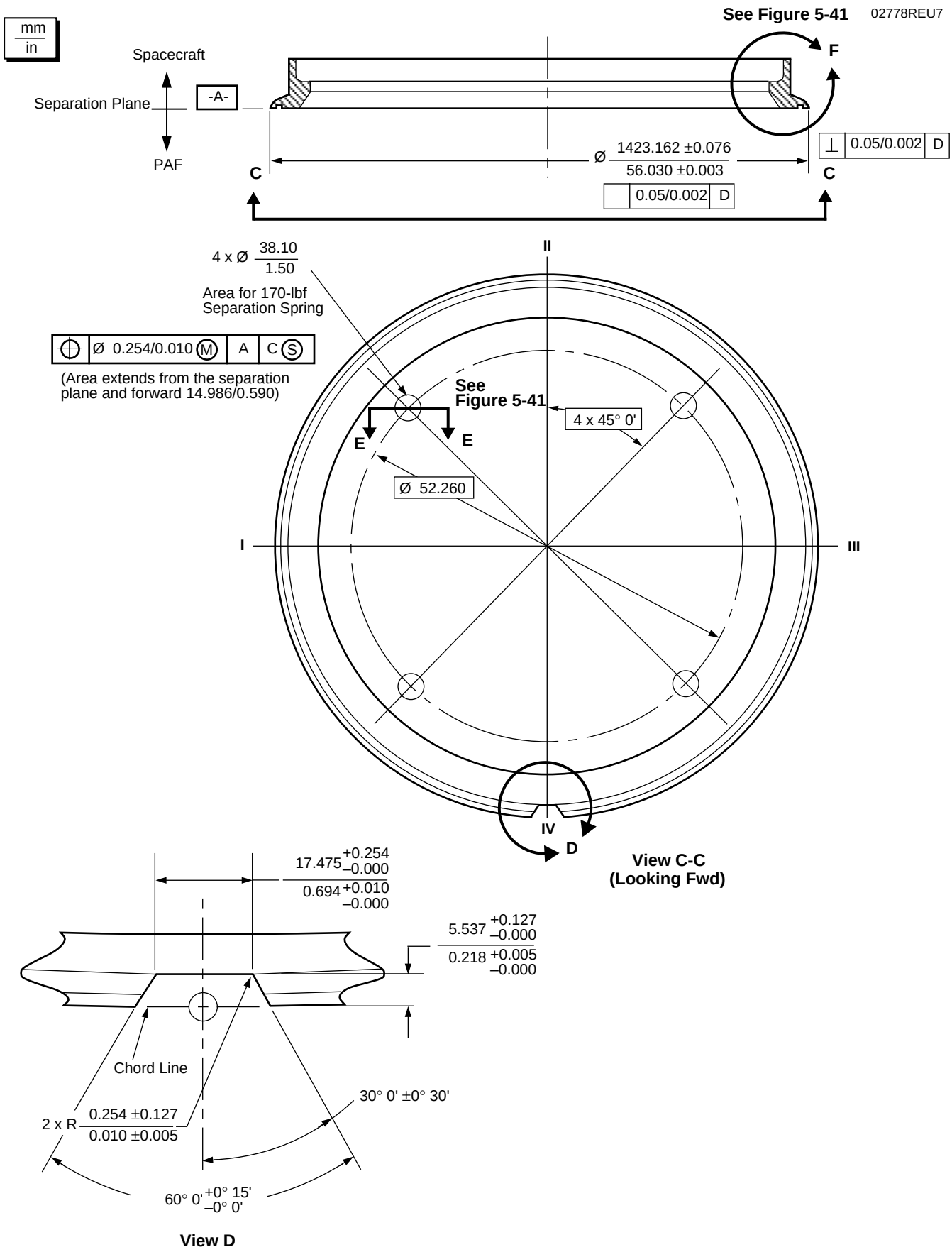

Figure 5-40. 5624 PAF Spacecraft Interface Dimensional Constraints (Download Figure)

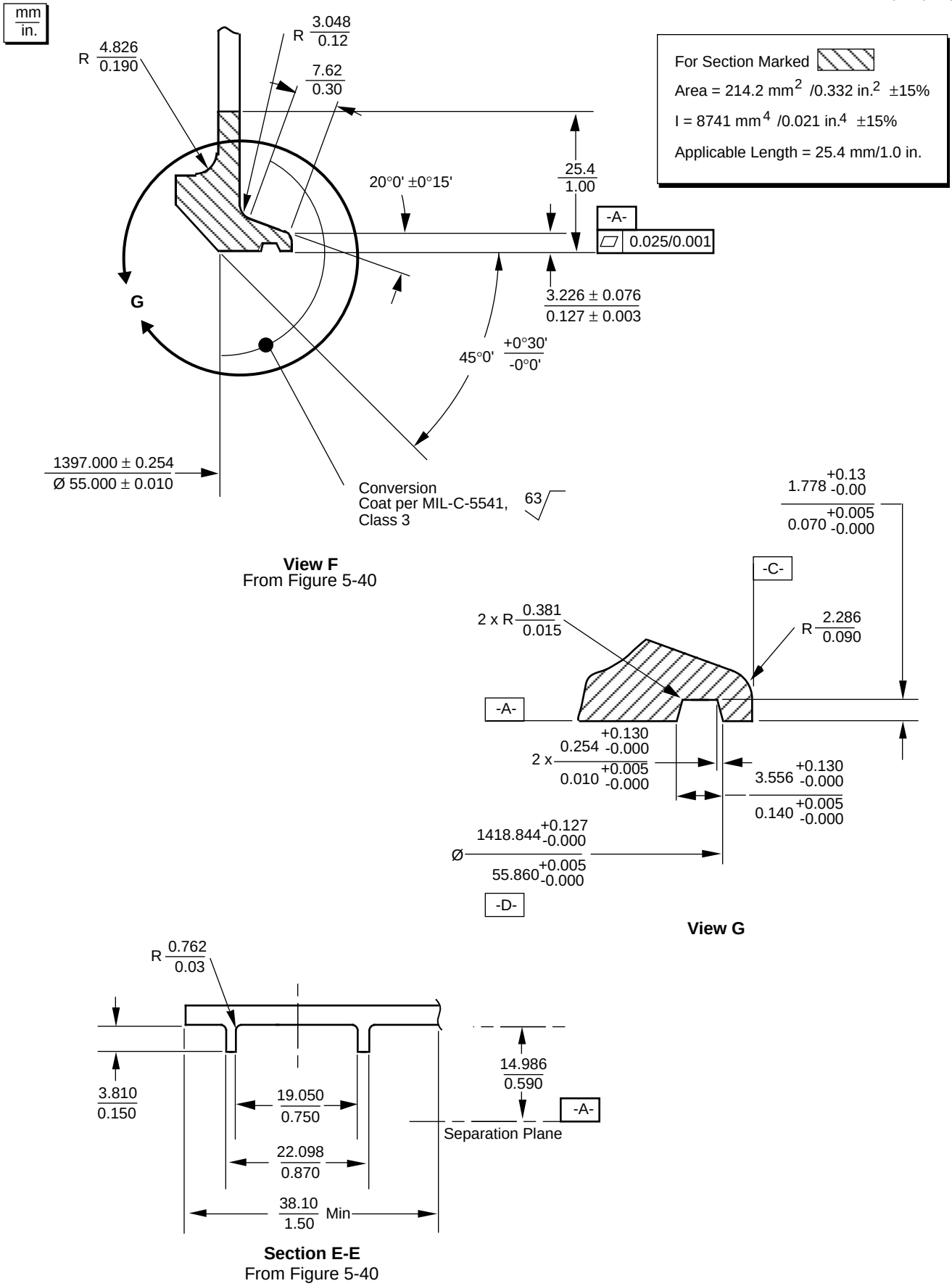

Figure 5-41. 5624 PAF Spacecraft Interface Dimensional Constraints (Download Figure)

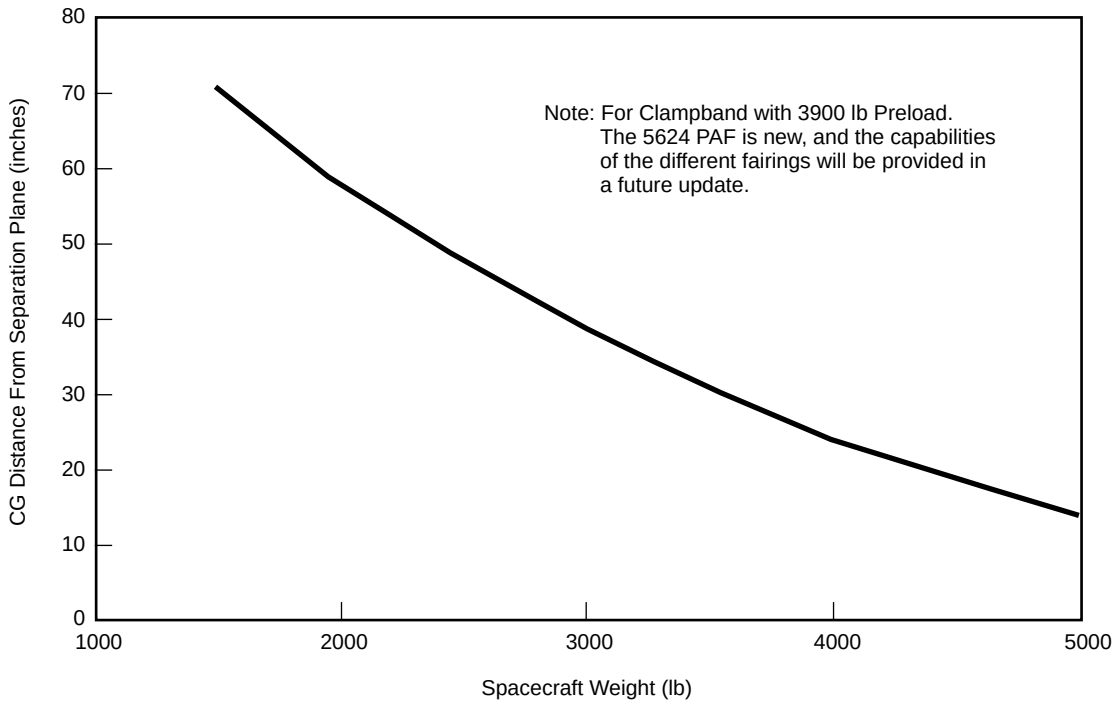

Figure 5-42. Capability of 5624 PAF on 7900 Vehicle (Download Figure)

the separation clamp assembly interfaces that have been qualified for the Space Transportation System (STS). These clamp assemblies are listed in Table 5-3.

In addition, MDA is developing a 168-cm (66-in.) diameter clamp assembly for the Delta III vehicle that is Delta II-compatible; and MDA is studying a 119-cm (47-in.) clamp assembly.

5.5 TEST FITTINGS AND FIT-CHECK POLICY

A PAF test fitting can be provided to the payload contractor to assist in the conduct of the environmental testing that is needed to ensure the flight readiness of the spacecraft. This fitting would be returned after the testing is completed. In addition, a fit-check will be conducted with the spacecraft using the flight PAF. This is typically conducted prior to shipment of the spacecraft from the manufacturing location to the launch site. MDA personnel will be available to conduct this activity. The fit-check verifies the flight interfaces (mechanical and electrical) and clearances of any attached hardware. The spacecraft must include all flight hardware so that adequate access and clearance can be demonstrated. The spacecraft contractor will provide a support stand for the PAF and the bolts needed to secure the PAF to it. Specific detail requirements for the fit-check will be provided by the Delta Program Office.

Table 5-3. Separation Clamp Assemblies

Approximate diameter (cm/in.)	Max flight preload (N/lb)	Spacecraft PAF flange angle (deg)
115/45	30,248/6800	15
123/48	25,355/5700	20
136/53	34,696/7800	20

M029-T013-4/4/96-3:52 PM

5.6 ELECTRICAL DESIGN CRITERIA

Presented in the following paragraphs is a description of the spacecraft/vehicle electrical interface design constraints. The discussion includes blockhouse-to-spacecraft wiring, spacecraft umbilical connectors, aerospace ground equipment

(AGE), the grounding system, and separation switches.

5.6.1 Blockhouse-to-Spacecraft Wiring

Provisions are made for monitoring the spacecraft from the blockhouse after its mating to the launch vehicle and until liftoff. Wiring is routed from a payload console in the blockhouse through a second-stage umbilical connector, through fairing wire harnesses, and to the spacecraft or PAF via lanyard-operated quick-disconnect connectors. Provisions have also been made for controlling and monitoring the spacecraft from the 1SLS Operations Building when it becomes operational.

For a typical vehicle, a second-stage umbilical connector (JU2) is provided for payload servicing wiring, of which 16 pins are reserved for vehicle functions. A typical baseline wiring configuration provides up to 31 wires through each of two fairing sectors. The fairing wire harnesses terminate in 32-pin lanyard disconnect connectors, which mate to the PAF or directly to the spacecraft. Additional wiring can be provided by special modification. Available wire types are twisted/shielded pairs, single- shielded, or unshielded single conductors. A typical vehicle wire harness configuration is shown in Figure 5-43. Other configurations can be accommodated.

Twenty-four additional wires are available through the second-stage umbilical (JU1), which is shared with other second-stage system functions.

The baseline wiring configuration between the Fixed Umbilical Tower (FUT) and the blockhouse is the following. At CCAS the configuration at SLC-17A and SLC-17B consists of 60 twisted and shielded pairs (120 wires, No. 14 AWG), 12 twisted and shielded pairs (24 wires, No. 16 AWG), and 14 twisted pairs (28 wires, No. 8 AWG). At VAFB the configuration at SLC-2 consists of 30 twisted and shielded pairs (60 wires, No. 12 AWG), 20 twisted and shielded pairs (40 wires, No. 14 AWG), 2 twisted and shielded triplets (6 wires, No. 1/0 AWG), 8 50-Ω coax cables and 6 fiber-optic cables.

Space is available in the blockhouse for installation of the ground support equipment (GSE) required for spacecraft checkout. The space allocated for the spacecraft GSE is described in Section 6 for SLC-17 and Section 7 for SLC-2. There is also limited space in the umbilical J-box for a buffer amplifier or other data line conditioning modules required for data transfer to the blockhouse. The space allocated in the J-box for this equipment has dimensions of approximately 303 by 305 by 203 mm (12 by 12 by 8 in.) at SLC-17A and B and 381 by 330 by 229 mm (15 by 13 by 9 in.) at SLC-2.

The standard interface method is as follows:

A. The spacecraft agency normally provides a console and a 12.2-m (40 ft) cable to interface with the spacecraft junction box in the blockhouse. The Delta program will provide the interfacing cable if requested by the spacecraft agency. Once the 1SLS Operations Building comes on-line, the spacecraft control console will be located in the spacecraft control room. Cable interface lengths are still to be determined.

B. The spacecraft apogee motor safe and arm circuit (if applicable) must interconnect with the pad safety officer's console (CCAS only).

C. A spacecraft-to-blockhouse wiring schematic is prepared for each mission from requirements provided by the spacecraft agency.

D. To ensure proper design of the spacecraft-to-blockhouse wiring, the following information, which must comply with the above requirements, shall be furnished by the spacecraft agency:

- Number of wires required.
- Pin assignments in the spacecraft umbilical connector(s).

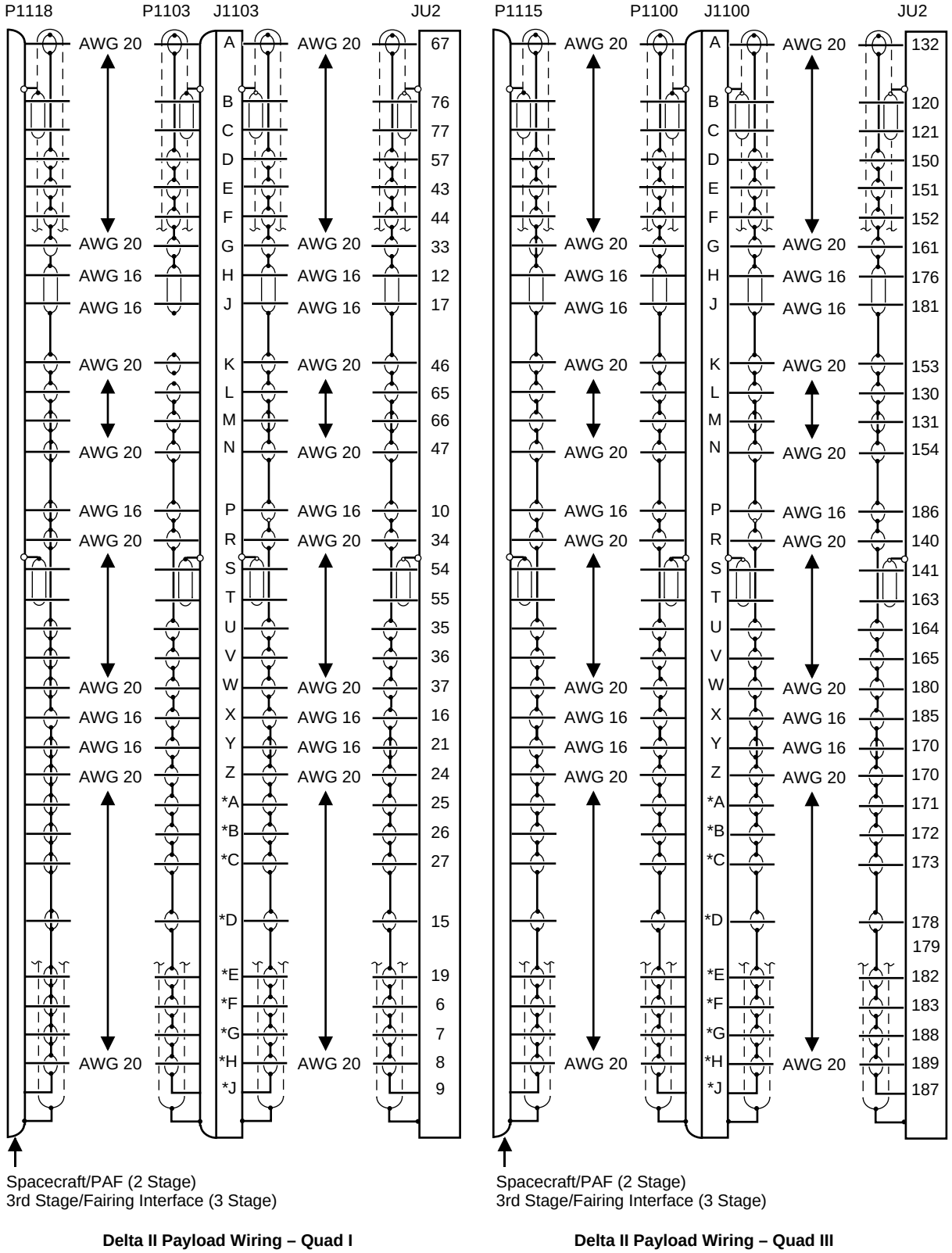

Delta II Payload Wiring – Quad I

Delta II Payload Wiring – Quad III

Figure 5-43. Typical Delta II Wiring Configuration

■ Function of each wire, including voltage, current, frequency, load type, magnitude, polarity, and maximum resistance or voltage drop requirements.

■ Shield requirements for RF protection or signal noise rejection.

■ Voltage of the spacecraft battery and polarity of the battery ground.

■ Part number and item number of the spacecraft umbilical connector(s) (compliance required with the standardized spacecraft umbilical connectors listed in Section 5.6.2).

■ Physical location of the spacecraft umbilical connector including (1) angular location in relation to the quadrant system, (2) station location, and (3) radial distance of the outboard face of the connector from the vehicle centerline for a fairing disconnect or connector centerline for PAF disconnect.

■ Periods (checkout or countdown) during which hard-line controlled/monitored systems will be operated.

During on-pad checkout, the spacecraft can be operated with the fairing installed or stored. Typical harness arrangement for both configurations are shown in Figure 5-44 for the ER and Figure 5-45 for the WR.

Each wire in the baseline spacecraft-to-blockhouse wiring configuration has a current-carrying capacity of 6 A, wire-to-wire isolation of 50 meg, and voltage rating of 600 VDC.

Typical one-way line resistance for any wire is shown in Table 5-4.

5.6.2 Spacecraft Umbilical Connectors

For spacecraft configurations in which the umbilical connectors interface directly to the payload attach fitting, the following connectors (conforming to MIL-C-26482) are recommended:

■ MS3424E61-50S (flange-mount receptacle)

■ MS3464E61-50S (jam nut-mount receptacle)

These connectors mate to an MS3446E61-50P rack and panel mount interface connector on the payload attach fitting.

For spacecraft configurations in which the umbilical connectors interface directly with the fairing wire harnesses, the following connectors (conforming to MIL-C-26482) are recommended:

■ MS3470L18-32S (flange-mount receptacle)

■ MS3474L18-32S (jam nut-mount receptacle)

These connectors mate to a 32-pin lanyard disconnect plug (MDC part number ST290G18N32PN) in the fairing.

The following alternative connectors, made by Deutsch and conforming to MIL-C-81703, may be used when spacecraft umbilical connectors interface with fairing-mounted wire harnesses or the payload attach fitting:

■ D817*E61-OSN

■ D817*E37-OSN

Table 5-4. One-Way Line Resistance

Location	Function	No. of wires	Fairing on*		Fairing off**	
			Length (m/ft)	Resistance (ohm)	Length (m/ft)	Resistance (ohm)
CCAS	Data/control	60	348/1142	2.5	379/1244	3.7
CCAS	Power	28	354/1160	1.3	385/1262	1.8
CCAS	Data/control	24	354/1160	6.2	385/1262	7.3
VAFB	Data/control	60	480/1576	3.7	511/1678	4.9
VAFB	Data/control	40	480/1576	5.5	511/1678	6.6
VAFB	Power	6	480/1576	0.9	511/1678	1.4

*Resistance values are for two parallel wires between the fixed umbilical tower and the blockhouse.
**Resistance values include fairing extension cable resistance.

M029, T014, 4/4/96, 3:52 PM

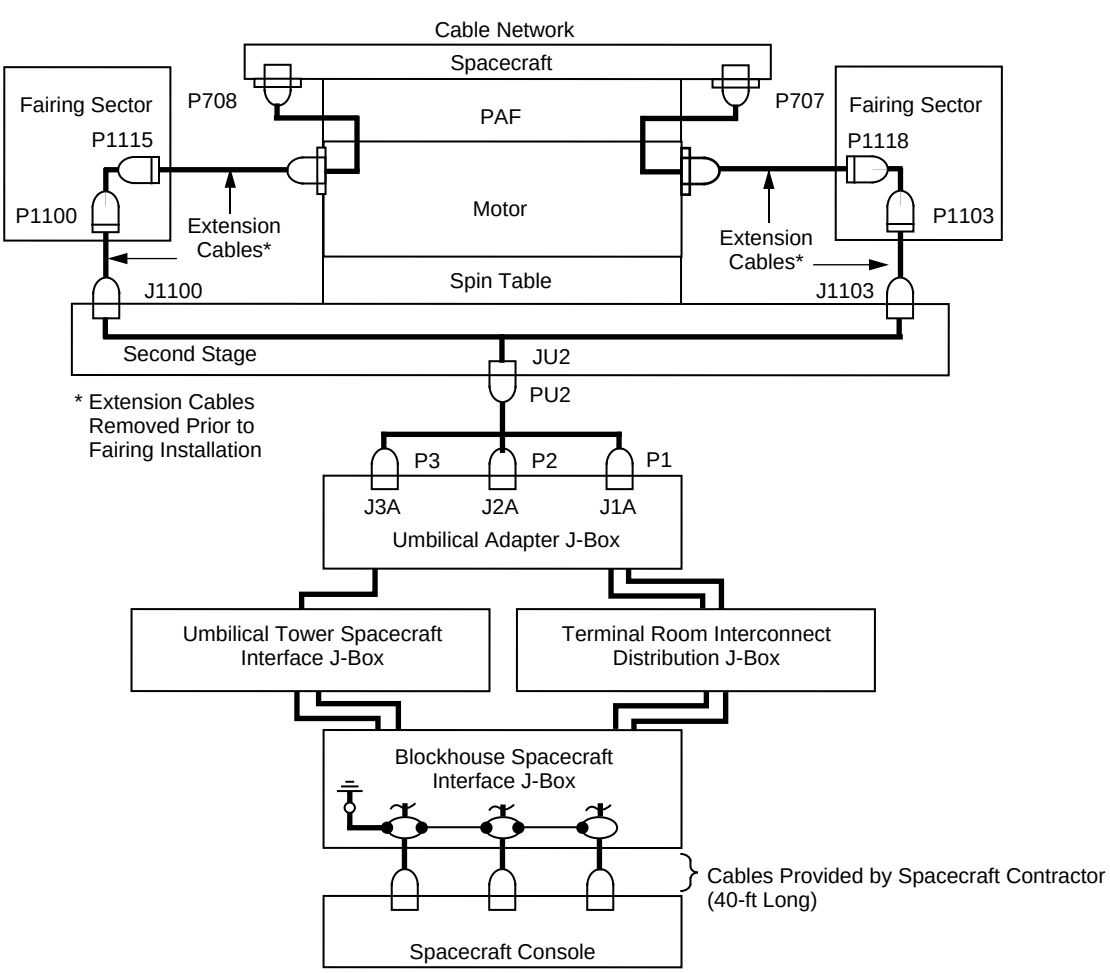

Figure 5-44. Typical Payload-to-Blockhouse Wiring Diagram for Three-Stage Missions at SLC-17

- D817*E27-OSN
- D817*E19-OSN
- D817*E12-OSN
- D817*E7-OSN

If "*" is 0, the receptacle is flange mounted; if 4, the receptacle is jam-nut mounted.

These connectors mate to a D817*E-series lanyard disconnect plug in the fairing or rack and panel plug on the PAF. The connector shell size numbers (i.e., 37, 27, etc.) also correspond to the number of contacts.

For spacecraft umbilical connectors that interface directly to the fairing wire harnesses, the spacecraft connector shall be installed so the polarizing key is in line with the longitudinal axis of the vehicle and facing forward (upward). The connector shall be within five degrees of the fairing sector centerline. The face of the connector shall be within two degrees of being perpendicular to the centerline. A typical spacecraft umbilical connector is shown in Figure 5-46. There should be no surrounding spacecraft intrusion within a 30-degree half-cone angle separation clearance envelope at the mated fairing umbilical connector (Figure 5-47). Pull forces for the lanyard disconnect plugs are shown in Table 5-5. For spacecraft umbilical connectors interfacing with the PAF the connector shall be installed so that the polarizing key is oriented radially outward. Spring compression and pin retention forces for the rack and panel connectors are shown in Table 5-6. Separation forces for the bayonet-mate lanyard disconnect connectors are shown in Table 5-7.

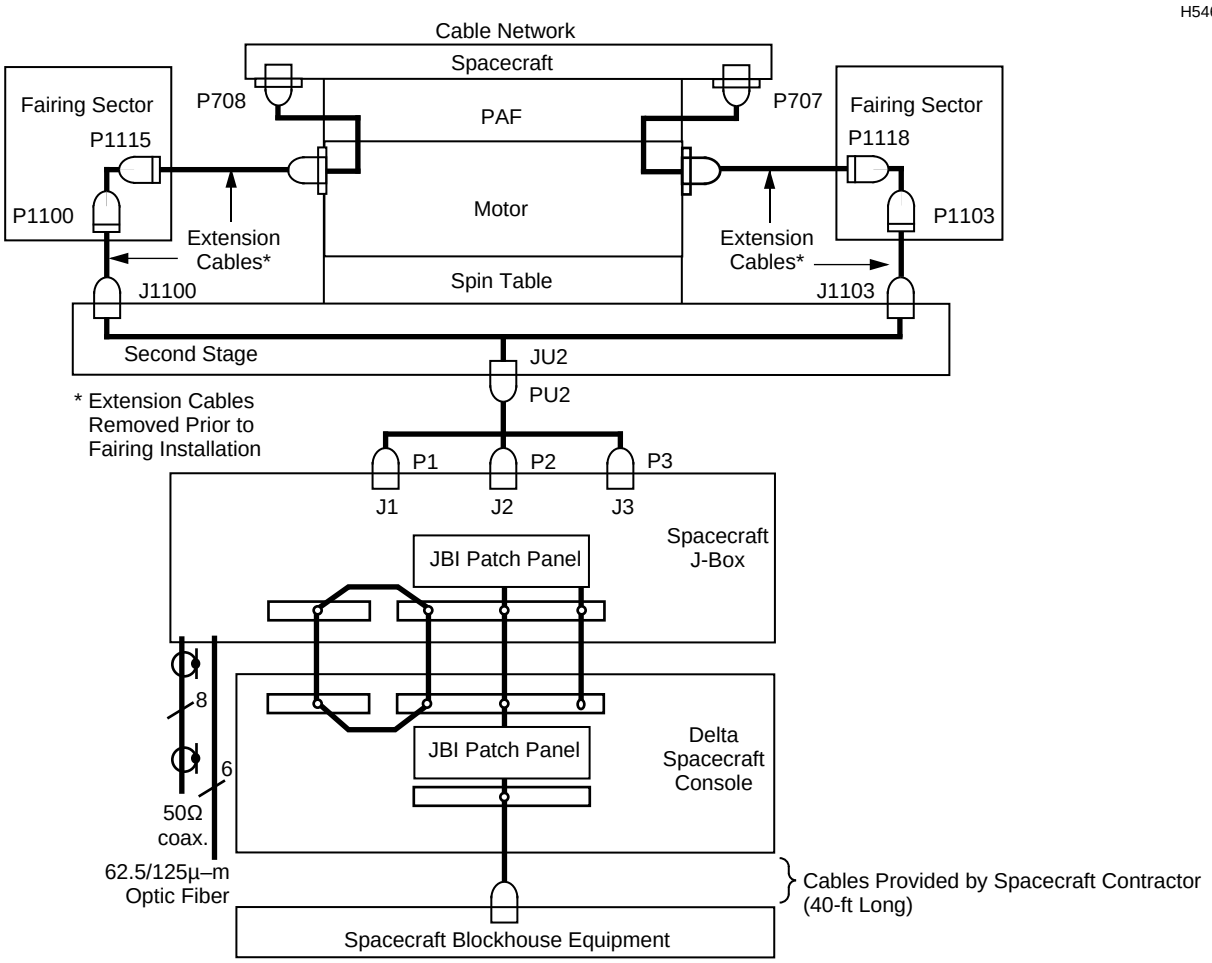

Figure 5-45. Typical Payload-to-Blockhouse Wiring Diagram for Three-Stage Missions at SLC-2

Table 5-5. Disconnect Pull Forces (Lanyard Plugs)

Con-nector type	Shell size	Minimum force for disengagement (lb)	Minimum force for disengagement (kg)	Maximum engagement and disengagement force (lb)	Maximum engagement and disengagement force (kg)
MS347X	18	8.0	3.63	35.0	15.88
D817X	61	7.0	3.17	49.0	22.21
D817X	37	6.0	2.72	44.0	19.96
D817X	27	4.0	1.81	40.0	18.14
D817X	19	3.0	1.36	38.0	17.24
D817X	12	2.0	0.91	34.0	15.42
D817X	7	1.5	0.68	20.0	9.07

M029, T015, 4/5/96, 8:47 AM

Table 5-6. Disconnect Forces (Rack and Panel Connectors)

Con-nector type	Shell size	Maximum spring compression (lb)	Maximum spring compression (Kg)	Maximum pin retention (lb)	Maximum pin retention (Kg)
D817X	61	77	34.93	68	30.84
	37	48	26.77	50	22.68
	27	46	92.80	46	20.86
	19	45	20.41	46	20.86
	12	36	16.33	38	17.24
	7	18	8.16	20	9.07

M029, T016, 4/4/96, 3:52 PM

5.6.3 Spacecraft Separation Switch

To monitor vehicle/spacecraft separation, a separation switch can be installed in the spacecraft. The configuration must be coordinated with the Delta Program Office. This switch should be located to interface with the vehicle at the separation plane or within 25.4 mm (1 in.) below it. A special pad will be provided on the vehicle side of the interface. The design of the switch should provide for at least 6.4 mm (0.25 in.) over-travel in the mated condition.

H54687.1

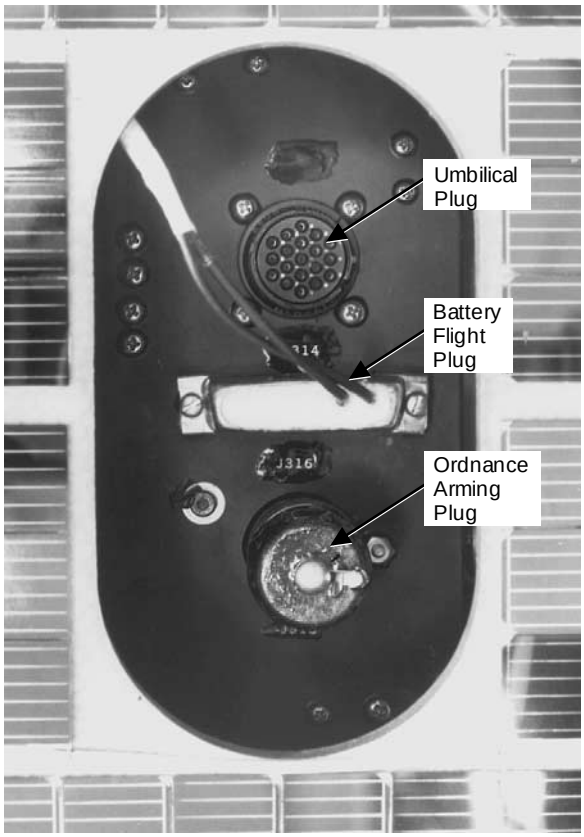

Figure 5-46. Typical Spacecraft Umbilical Connector

H54664.2

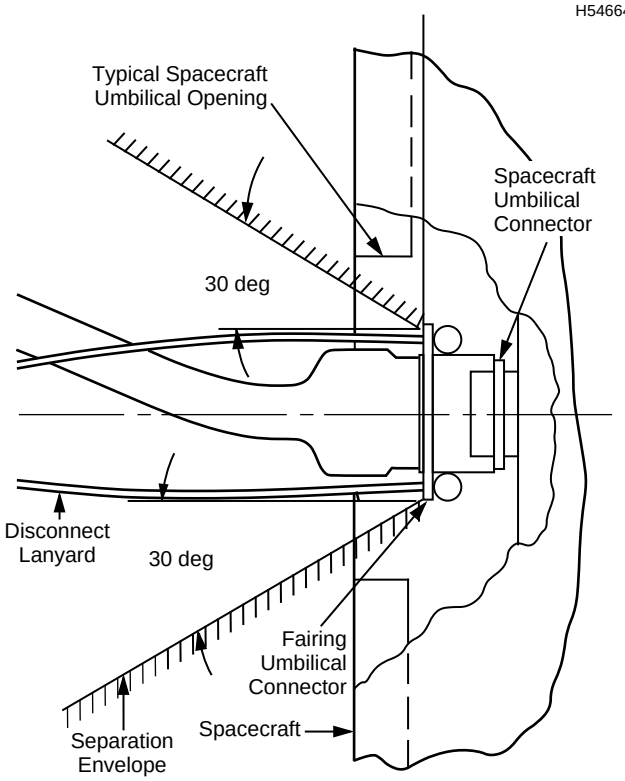

Figure 5-47. Spacecraft/Fairing Umbilical Clearance Envelope

Table 5-7. Disconnect Forces (Bayonnet-Mate Lanyards)

Connector type	Shell size	Min (lb)	Min (kg)	Max (lb)	Max (kg)
ST290X	12	8	3.63	20	9.07
	14	8	3.63	30	13.61
	16	8	3.63	30	13.61
	18	8	3.63	35	15.88
	20	8	3.63	35	15.88
	22	8	3.63	40	18.14
	24	8	3.63	40	18.14

Typical spacecraft separation switch concepts are shown in Figure 5-48. The switch located over the separation spring is the preferred concept. An alternative for obtaining spacecraft separation indication is via the vehicle telemetry system.

5.6.4 Spacecraft Safe and Arm Circuit

The spacecraft apogee motor safe and arm circuit (if applicable) must interconnect with the pad safety officer's console in the blockhouse or Operations Building, when operational. An interface diagram for the spacecraft console and the pad safety console is given in Figure 5-49 for the existing blockhouse configuration and Figure 5-50 for the Operations Building configuration. Circuits for the safe and arm (S&A) mechanism "arm permission" and the S&A talk-back lights are provided. This link is applicable at SLC-17 only and is not required at SLC-2.

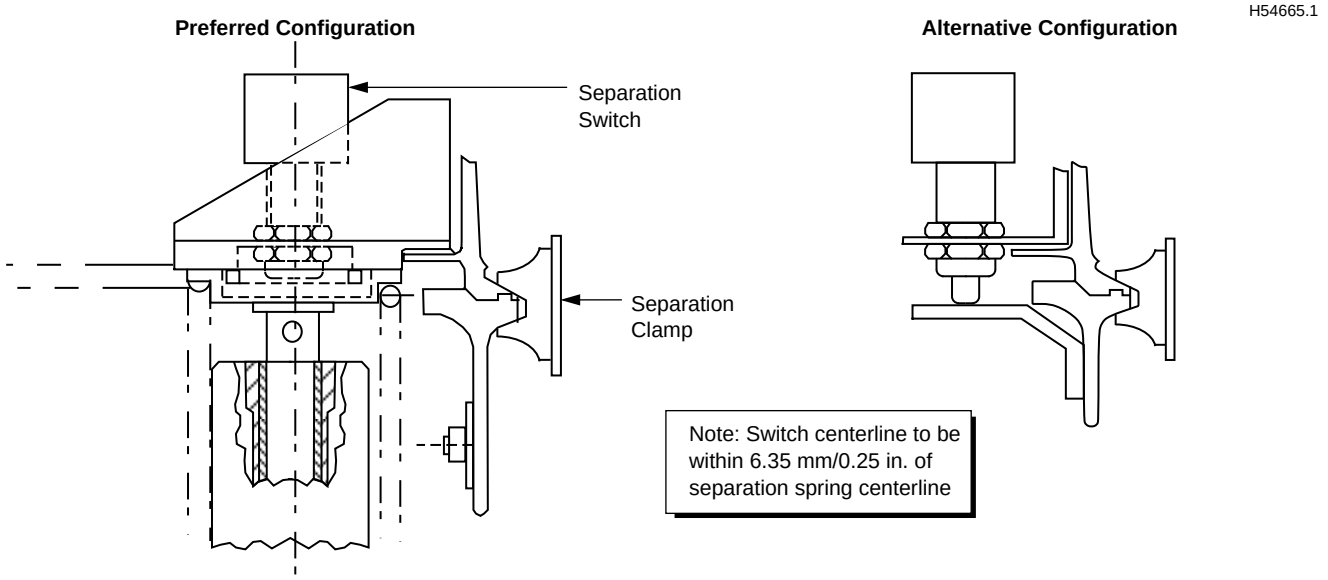

Figure 5-48. Typical Spacecraft Separation Switch and PAF Switch Pad

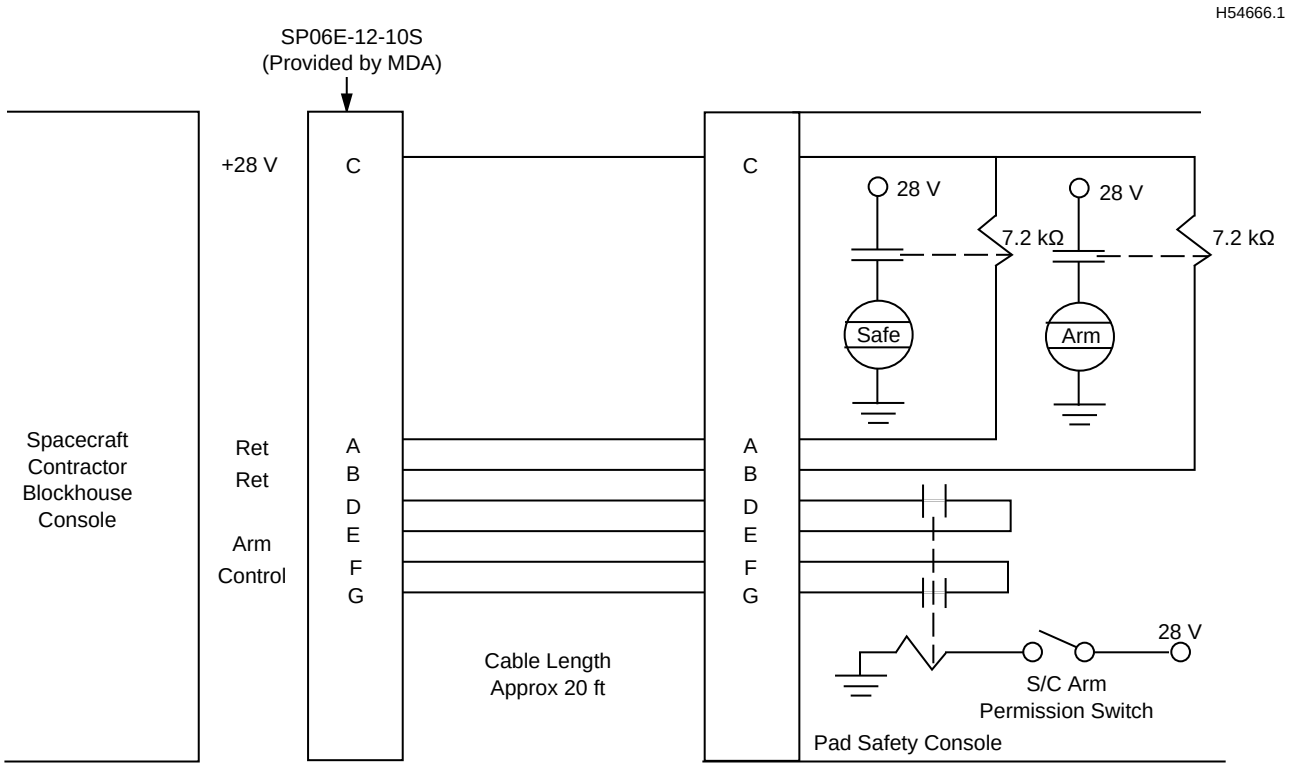

Figure 5-49. Spacecraft/Pad Safety Console Interface for SLC-17

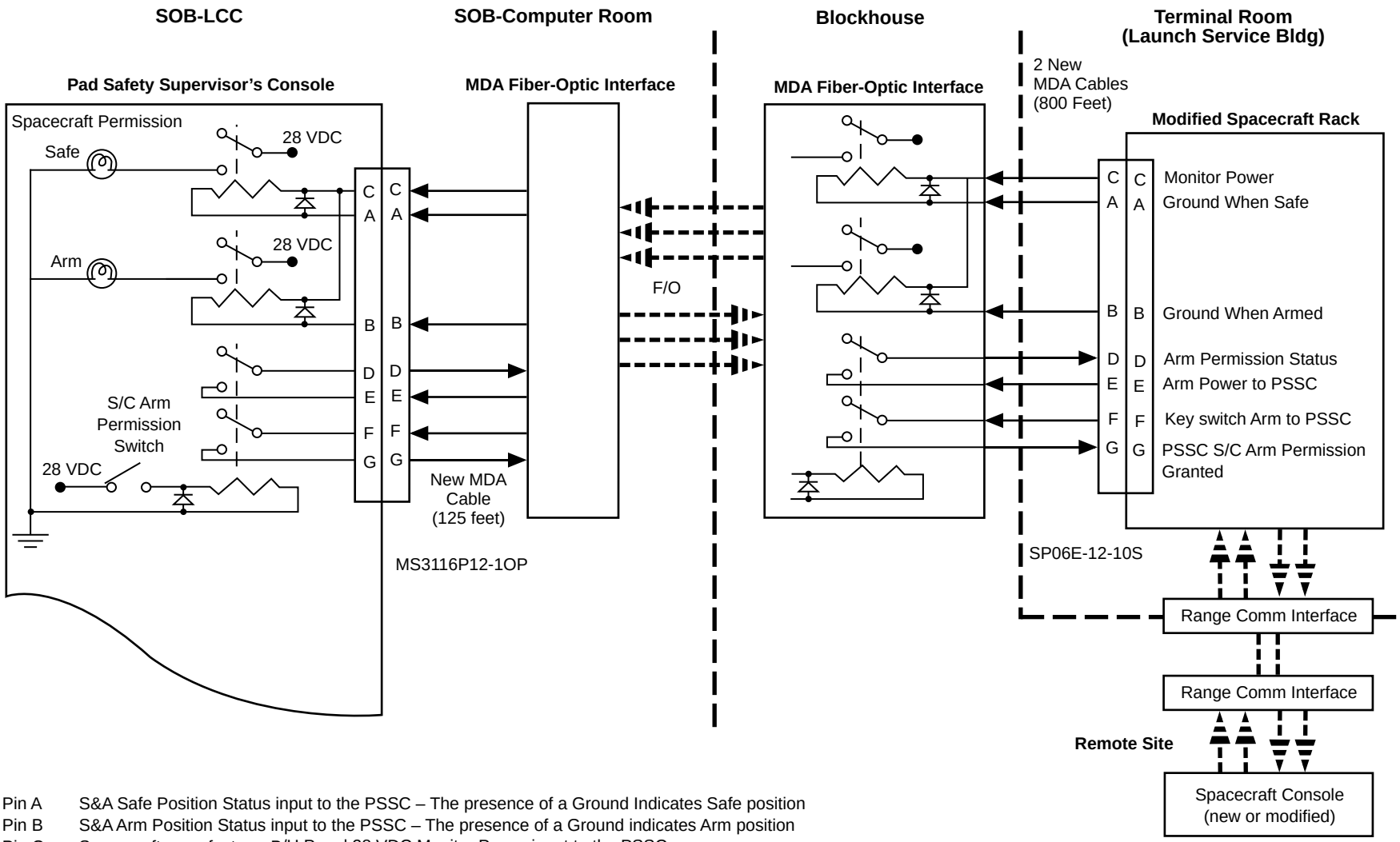

Pin A	S&A Safe Position Status input to the PSSC – The presence of a Ground Indicates Safe position
Pin B	S&A Arm Position Status input to the PSSC – The presence of a Ground indicates Arm position
Pin C	Spacecraft manufacturer B/H Panel 28 VDC Monitor Power input to the PSSC
Pin D	Arm Permission Switch Position Status from PSSC – The presence of 28 VDC indicates Permission Granted
Pin E	Arming Power Switch input to the PSSC – The presence of 28 VDC indicates S/C B/H Console Arm Power Switch is On
Pin F	Safe/Arm Key Switch Position Status input to the PSSC – The presence of 28 VDC indicates S/C B/H Console Key Switch is in the Arm Position
Pin G	PSSC Arm Permission Command to Spacecraft – The presence of 28 VDC Arms the S/C S&A

Section 6
LAUNCH OPERATIONS AT EASTERN RANGE

This section presents a description of Delta Launch Vehicle Operations associated with Space Launch Complex 17 (SLC-17) at the Cape Canaveral Air Station, Florida. Delta II prelaunch processing and spacecraft operations conducted prior to launch are presented.

6.1 ORGANIZATIONS

MDA operates the Delta launch system and maintains a team that provides launch services to NASA, USAF, and commercial customers at CCAS. MDA provides the interface to the Department of Transportation (DOT) for the licensing and certification needed to launch commercial spacecraft using the Delta II. MDA also has an established working relationship with Astrotech Space Operations. Astrotech owns and operates a processing facility for commercial spacecraft in Titusville, Florida, in support of Delta missions. Utilization of these facilities and services is arranged by MDA for the customer.

MDA interfaces with NASA at Kennedy Space Center (KSC) through the Payload Management and Operations Directorate. NASA designates a Launch Site Support Manager who arranges all of the support requested from NASA for a launch from CCAS. MDA has an established interface with the USAF Space and Missile Center (USAF SMC) Delta II Program Office and the 45th Space Wing Directorate of Plans. The USAF designates a Program Support Manager (PSM) to be a representative of the 45th Space Wing. The PSM serves as the official interface for all support and services requested. These services include range instrumentation, facilities/equipment operation and maintenance, as well as safety, security, and logistics support. Requirements are described in documents prepared using the government's universal documentation system format. Formal submittal of these documents to the government agencies is made by MDA. MDA and the spacecraft agency generate the Program Requirements Documents (PRD).

The organizations that support a launch are shown in Figure 6-1. A spacecraft coordinator from the MDA-CCAS launch team is assigned for each mission to assist the spacecraft team during the launch campaign by helping to obtain safety approval of the spacecraft test procedures and operations, integrating the spacecraft operations into the launch vehicle activities, and serving as the interface between the spacecraft and test conductor in the blockhouse during the countdown and launch.

6.2 FACILITIES

In addition to those facilities required for the Delta II launch vehicle, specialized facilities are provided for checkout and preparation of the spacecraft. Laboratories, clean rooms, receiving and shipping areas, hazardous operations areas, offices, etc., are provided for use by spacecraft project personnel.

The commonly used spacecraft facilities at the eastern range are the following:

A. Spacecraft nonhazardous payload processing facilities (PPF):

1. Astrotech Space Operations provides Buildings 1 and 1A.
2. NASA provides Buildings AE and AM.

B. Hazardous processing facilities (HPF):

1. Astrotech Space Operations provides Building 2.

Commercial spacecraft will normally be processed through the Astrotech facilities. The other facilities described in this section are controlled by

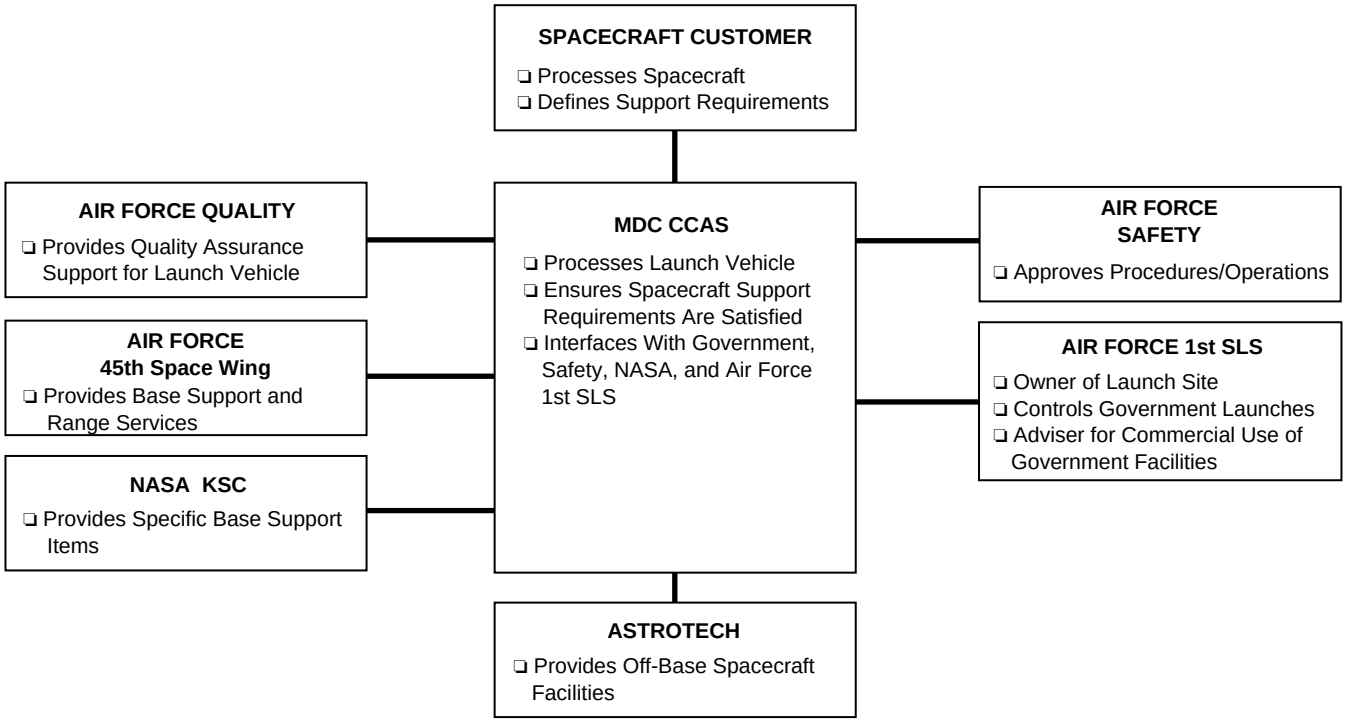

Figure 6-1. Organizational Interfaces for Commercial Users

NASA and USAF and will be used only under special circumstances for commercial spacecraft.

The spacecraft agency must provide its own test equipment for spacecraft preparations, including telemetry receivers and telemetry ground stations. Communications equipment, including some antennas, is available as base equipment for voice and data transmissions.

Transportation and handling of the spacecraft and associated equipment are provided by MDA from any of the local airports to the spacecraft processing facilities, and from there to the launch site. Equipment and personnel are also available for loading and unloading operations. Shipping containers and handling fixtures attached to the spacecraft are provided by the spacecraft project.

Shipping and handling of hazardous materials such as EEDs, radioactive sources, etc., must be in accordance with applicable regulations. It is the responsibility of the spacecraft agency to identify these items and become familiar with such regulations. These regulations include those imposed by NASA and USAF and FAA (refer to Section 9).

6.2.1 Astrotech Space Operations Facilities

The Astrotech facility is located approximately 5.6 km (3 mi) west of the Gate 3 entrance to KSC near the intersection of State Road 405 and State Road 407 in the Spaceport Industrial Park in Titusville, Florida (Figures 6-2 and 6-3). This facility includes 7,400 m^2 (80,000 ft^2) of industrial space that is constructed on 15.2 hectares (37.5 acres) of land.

There are six major buildings on the site, as shown in Figure 6-4.

A general description of each facility is given below. For details of door sizes, hook height, etc., a copy of the Astrotech Facility Accommodation Handbook is available.

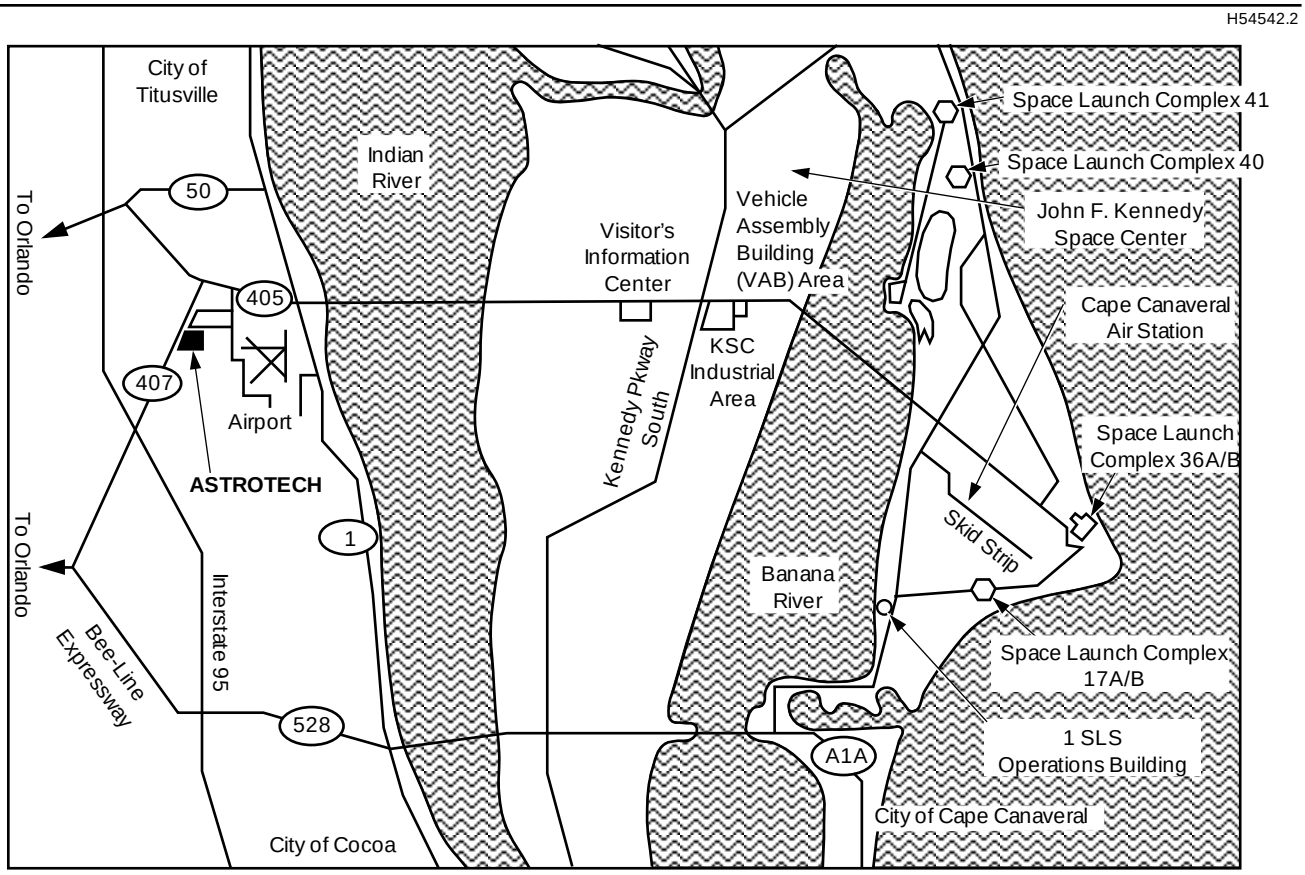

Figure 6-2. Astrotech Site Location

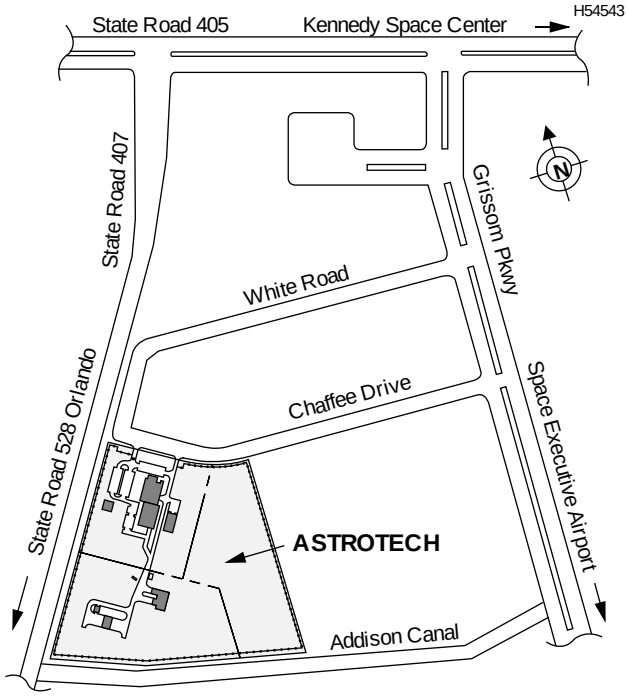

Figure 6-3. Astrotech Complex Location

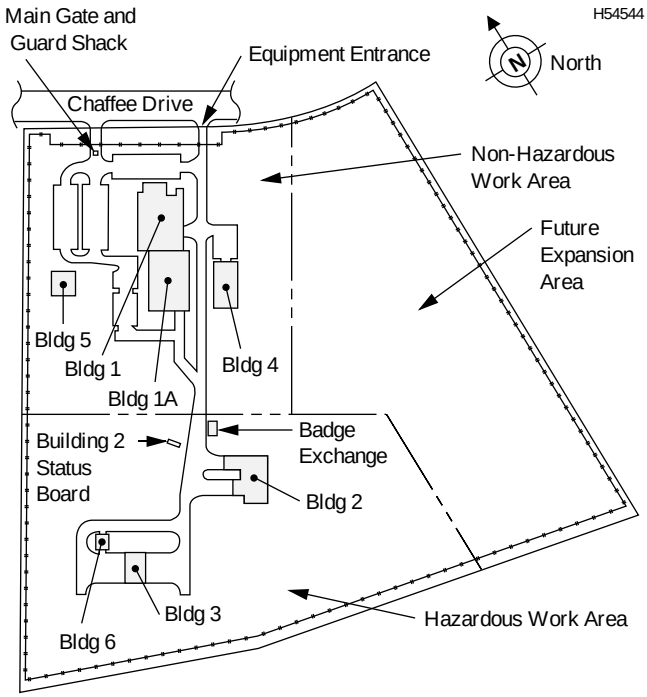

Figure 6-4. Astrotech Building Locations

Building 1/1A, the Nonhazardous Processing Facility, is used for final assembly and checkout of the spacecraft. It houses spacecraft cleanroom high bays, control rooms, and offices. Antennas mounted on the building provide line-of-sight communication with SLC-17 and Building AE at CCAS.

Building 2, the Hazardous Processing Facility, houses three explosion-proof high bays for hazardous operations, including liquid propellant and solid rocket motor handling operations, spin balancing, third-stage preparations, and payload final assembly.

Building 3, the Environmental Storage Facility, provides six secure, air-conditioned, masonry-constructed bays for storage of high-value hardware or hazardous materials.

Building 4, the Warehouse Storage Facility, provides covered storage space for shipping containers, hoisting and handling equipment, and other articles not requiring environmental control.

Building 5, the Owner/Operator Office Area, is an executive office building that provides the spacecraft project officials with office space for conducting business during their stay at Astrotech and the Eastern Range.

Building 6, the Fairing Support Facility, provides covered storage space for launch vehicle hardware and equipment, and other articles not requiring environmental control.

6.2.1.1 Astrotech Building 1/1A. Building 1/1A has overall plan dimensions of approximately 113 m by 34 m (370 ft by 110 ft) and a maximum height of approximately 18 m (60 ft). Major features are two airlocks, four high bays with control rooms, and an office complex. The airlocks and high bays are Class 100,000 cleanrooms, with the ability to achieve Class 10,000 or better cleanliness levels using strict operational controls. They have floor coverings made of an electrostatic-dissipating (high-impedance) epoxy-based material. The ground-level floor plan of Building 1/1A is shown in Figure 6-5, and the upper-level floor plan is shown in Figure 6-6.

Building 1. The airlock in Building 1 has a floor area measuring 9.1 m by 36.6 m (30 ft by 120 ft) and a clear vertical ceiling height of 7.0 m (23 ft). It provides environmentally controlled external access to the three high bays and interconnects with Building 1A. There is no overhead crane in the airlock. Three RF antenna towers are located on the roof of the airlock. The three high bays in Building 1 each have a floor area measuring 12.2 m by 18.3 m (40 ft by 60 ft) and a clear vertical ceiling height of 13.2 m (43.5 ft). Each high bay has a 9072-kg (10-ton) overhead traveling bridge crane with a maximum hook height of 11.3 m (37 ft).

There are two adjacent control rooms for each high bay. Each control room has a floor area measuring 4.3 m by 9.1 m (14 ft by 30 ft) with a 2.7-m (8.9-ft) ceiling height. A large exterior door is provided in each control room to facilitate installation and removal of equipment. Each control room has a large window for viewing activities in the high bay.

Garment rooms provide personnel access to and support the high bay areas. Limiting access to the high bays through these rooms helps control personnel traffic and maintains a cleanroom environment.

Office accommodations for spacecraft project personnel are provided on the upper floor of Building 1 (Figure 6-6). This space is conveniently located near the spacecraft processing area and contains windows for viewing activities in the high bay.

The remaining areas of Building 1 contain the Astrotech offices and shared support areas, includ-

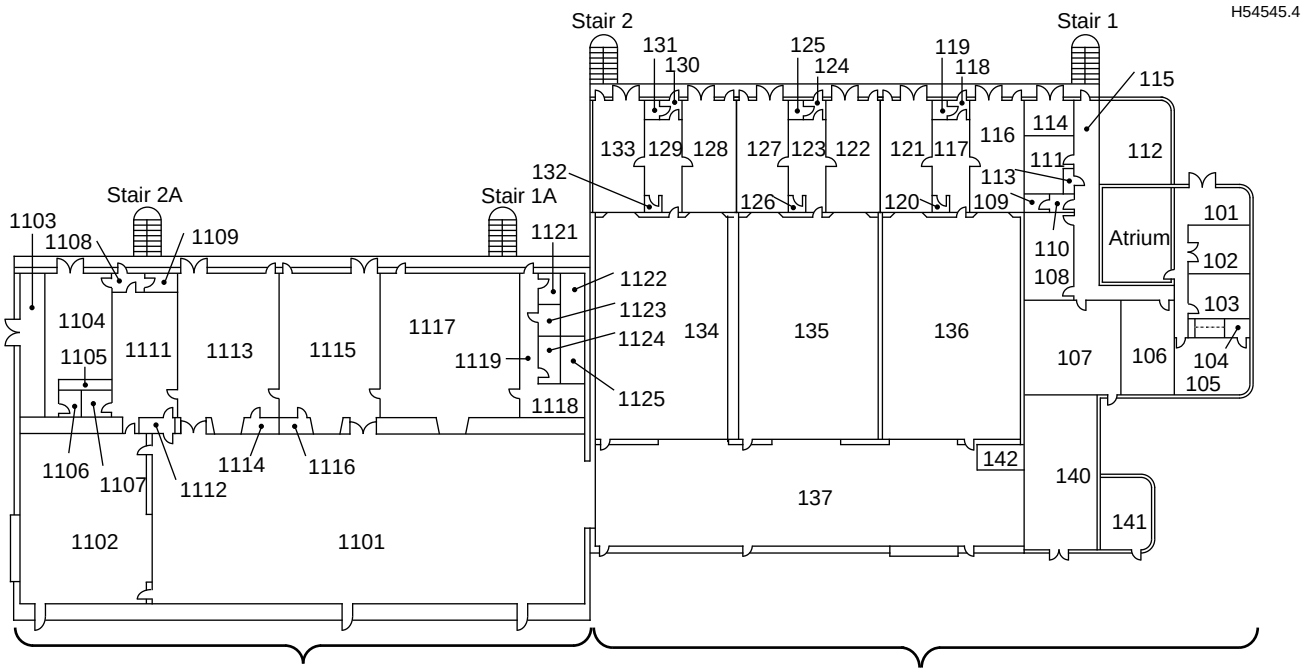

Building 1A

1101	Large High Bay D	1113	Control Room D2
1102	Large Airlock	1114	Equipment Room
1103	Mechanical Room	1115	Control Room D1
1104	Soundproof Conference Room D1	1116	Equipment Room
1105	Closet	1117	Office Area D1
1106	Restroom	1118	Break Room
1107	Restroom	1119	Corridor
1108	Vestibule	1120	Not Used
1109	Janitor Storage	1121	Men's Washroom
1110	Not Used	1122	Men's Restroom
1111	Change Room D	1123	Janitor Closet
1112	Air Shower	1124	Women's Washroom
		1125	Women's Restroom

Building 1

101	ASO Reception Area	122	Control Room B1
102	ASO Repro/Fax	123	Change Room B
103	ASO Staff Office	124	Vestibule B
104	ASO Office Restroom	125	Storage B
105	ASO Staff Office	126	Restroom B
106	ASO Staff Office	127	Control Room B2
107	ASO Staff Office	128	Control Room C1
108	Conference Room	129	Change Room C
109	Women's Restroom	130	Vestibule C
110	Women's Lounge	131	Storage C
111	Men's Restroom	132	Restroom C
112	Break/Lunch Room	133	Control Room C2
113	Janitor Closet	134	High Bay C
114	ASO Machine Shop	135	High Bay B
115	Corridor	136	High Bay A
116	Control Room A1	137	Common Airlock
117	Change Room A	138	Not Used
118	Vestibule A	139	Not Used
119	Storage A	140	Mechanical Room
120	Restroom A	141	Electrical Vault
121	Control Room A2	142	Telephone Room

Figure 6-5. First Level Floor Plan, Building 1/1A, Astrotech

ing break room, supply/photocopy room, restroom facilities, and a 24-person conference room.

Building 1A. In addition to providing access via the Building 1 airlock, Building 1A contains a separate airlock that is an extension of the high bay and provides environmentally controlled external access. The airlock has a floor area measuring 12.2 m by 15.5 m (40 ft by 51 ft) and a clear vertical ceiling height of 18.3 m (60 ft). The airlock is a class 100,000 clean room. External access for payloads and equipment is provided through a large exterior door.

The exterior wall of the airlock adjacent to the exterior overhead door contains a 4.3-m by 4.3-m (14-ft by 14-ft) radio frequency (RF)-transparent window, which looks out onto a far-field antenna range that has a 30.5-m (100-ft) high target tower located approximately 91.4 m (300 ft) downrange. The center of the window is 5.8 m (19 ft) above the floor.

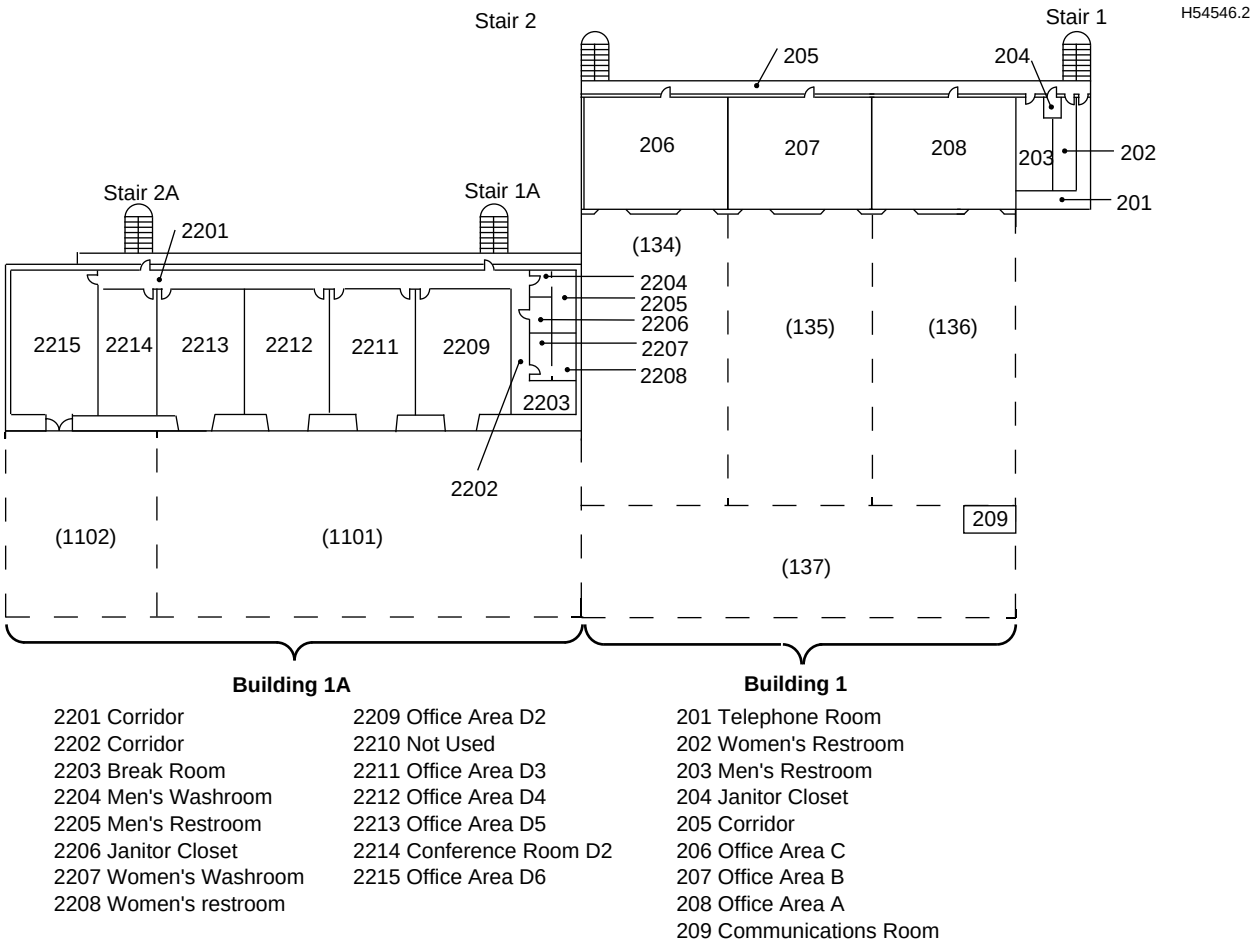

2201 Corridor
2202 Corridor
2203 Break Room
2204 Men's Washroom
2205 Men's Restroom
2206 Janitor Closet
2207 Women's Washroom
2208 Women's restroom
2209 Office Area D2
2210 Not Used
2211 Office Area D3
2212 Office Area D4
2213 Office Area D5
2214 Conference Room D2
2215 Office Area D6
201 Telephone Room
202 Women's Restroom
203 Men's Restroom
204 Janitor Closet
205 Corridor
206 Office Area C
207 Office Area B
208 Office Area A
209 Communications Room

Figure 6-6. Second-Level Floor Plan, Building 1/1A, Astrotech

The high bay has a floor area measuring 15.5 m by 38.1 m (51ft by 125 ft) and a clear vertical ceiling height of 18.3 m (60 ft). The high bay and airlock share a common 27,215-kg (30-ton) overhead traveling bridge crane with a maximum hook height of 15.2 m (50 ft). Personnel normally enter the high bay through the garment change room to maintain cleanroom standards. The high bay is a class 100,000 clean room.

There are two control rooms adjacent to the high bay. Each control room has a floor area measuring 9.1 m by 10.7 m (30 ft by 35 ft) with a 2.8-m (9.3-ft) ceiling height. Each control room has the following: a large interior door to permit the direct transfer of equipment between the high bay and the control room; a large exterior door to facilitate installation and removal of equipment; and a large window for viewing activities in the high bay.

A garment room provides access for personnel and supports the high bay. Limiting access to the high bay through this room helps control personnel traffic and maintains a cleanroom environment.

Office accommodations for spacecraft project personnel are provided on the ground floor and upper floor of Building 1A. This space is conveniently located near the spacecraft processing area and contains windows for viewing activities in the high bay.

The remaining areas of Building 1A contain shared support areas, including break rooms, restroom facilities, and two 24-person conference rooms (one of which is a secure conference room

designed for the discussion and handling of classified material).

6.2.1.2 Astrotech Building 2. Building 2 has overall plan dimensions of approximately 36.6 m by 36.6 m (120 ft by 120 ft) and a height of 14.0 m (46 ft). Major features are two airlocks, three high bays, and two control rooms. The airlocks and high bays have floor coverings made of electrostatic-dissipating (high-impedance) epoxy-based material. They are Class 100,000 cleanrooms, with the ability to achieve Class 10,000 or better cleanliness levels using strict operational controls. The ground-level floor plan of Building 2 is shown in Figure 6-7.

The south airlock provides environmentally controlled access to Building 2 via the south high bay. The south airlock has a floor area measuring 8.8 m by 11.6 m (29 ft by 38 ft) and a clear vertical ceiling height of 13.1 m (43 ft). There is no overhead crane in the south airlock.

The north airlock provides environmentally controlled access to Building 2 via the north high bay and, by restricting external Building 2 access to the south airlock, can be used as a fourth high bay. The north airlock has a floor area measuring 12.2 m by 15.2 m (40 ft by 50 ft) and a clear vertical ceiling height of 19.8 m (65 ft). The north airlock has a 27,215-kg (30-ton) overhead traveling bridge crane with a maximum hook height of 16.8 m (55 ft). Centered in the north airlock is a 7.6 m by 7.6 m (25 ft by 25 ft) floor area surrounded by a trench system that drains into the emergency spill retention system.

The north and south high bays are designed to support spacecraft solid propellant motor assembly and liquid monopropellant and bipropellant transfer operations. All liquid propellant transfer operations take place within a 7.6 m by 7.6 m (25 ft by 25 ft) floor area surrounded by a trench system. The trench system is sloped so that any major spill of hazardous propellants would drain into the emergency spill retention system. The center high bay contains an 8391-kg (18,500-lb) capacity dynamic balance machine that is designed to balance solid rocket motor upper stages and spacecraft.

A control room is located next to each processing high bay to facilitate monitoring and control of hazardous operations. Visual contact with the high bay is through an explosion-proof glass window in the separating wall. Access to the high bay area from the control room is via the garment room while spacecraft processing operations are being conducted.

Because the spin balance table equipment in the center high bay is below the floor level, other uses can be made of this bay. The spin balance machine control room is separate from the spin room for safety considerations. Television cameras are used for remote monitoring of spin room activities.

Adjacent to the south high bay, fuel and oxidizer cart storage rooms are provided with access doors to the high bay and exterior doors for easy equipment access. Garment rooms provide personnel access to and support the high bay areas. Limiting access to the high bays through these rooms helps control personnel traffic and maintains a cleanroom environment.

6.2.1.3 Astrotech Building 3. The dimensions of Building 3 (Figure 6-8) are approximately 15.8 by 21.6 m (52 by 71 ft). The building is divided into six storage bays, each with a clear vertical height of approximately 8.5 m (28 ft). The bays have individual environmental control but are not cleanrooms, which mandates that payloads be stored in suitable containers.

6.2.1.4 Astrotech Building 4. Building 4 (Figure 6-9) is approximately 18.9 by 38.1 m (62 by 125 ft),

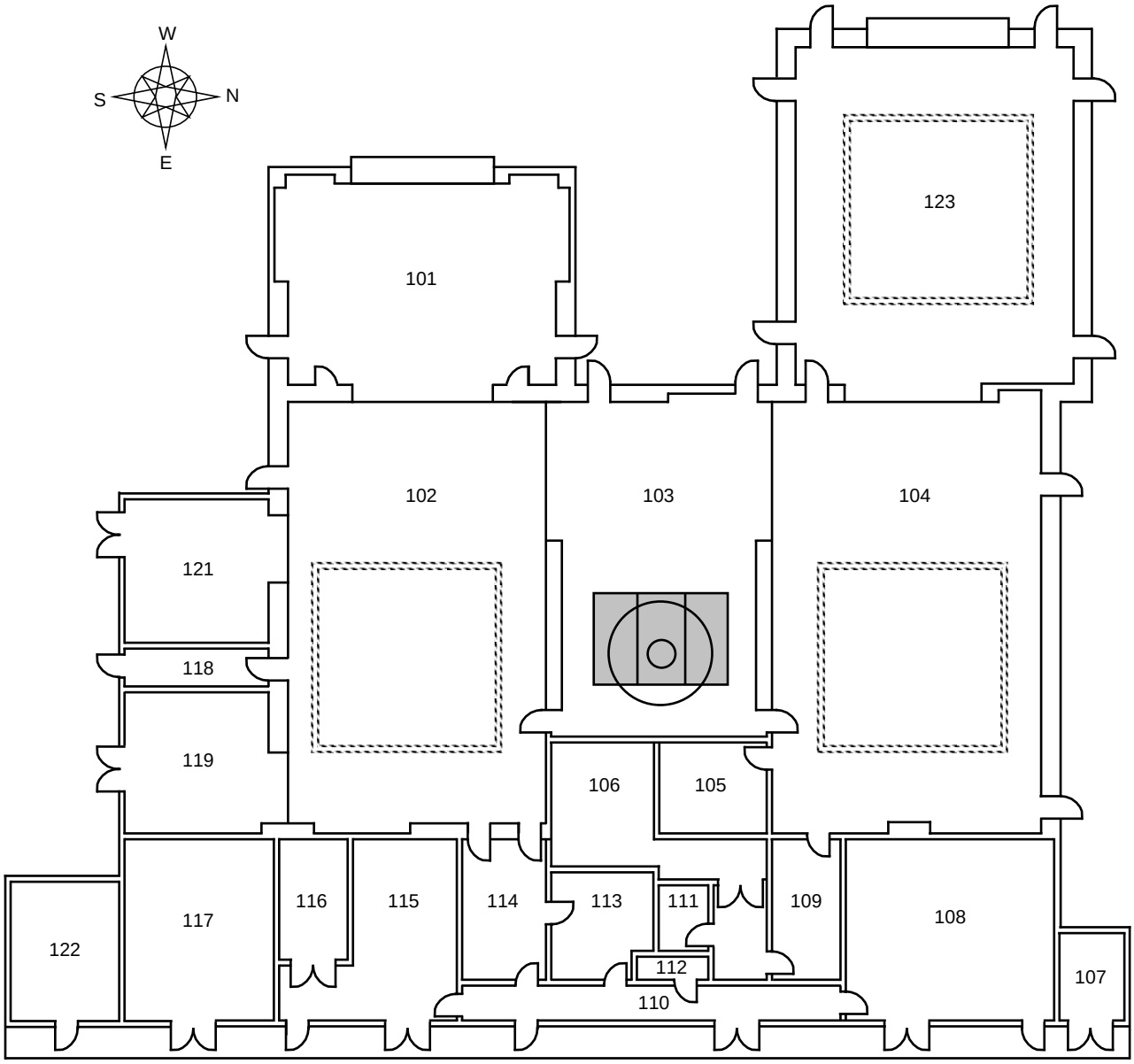

101 South Airlock
102 South High Bay
103 Center High Bay
104 North High Bay
105 Office
106 Mechanical Room 2
107 Motor Generator Room
108 North Control Room
109 North Change Room
110 Corridor
111 Women's Restroom
112 Janitor
113 Men's Restroom
114 South Change Room
115 South Control Room
116 Balance Machine Control Room
117 Mechanical Room 1
118 Corridor
119 Oxidizer Cart Storage Room
120 Not Used
121 Fuel Cart Storage Room
122 Electrical Vault
123 Building 2A – North Airlock High Bay

Figure 6-7. Building 2 Detailed Floor Plan, Astrotech

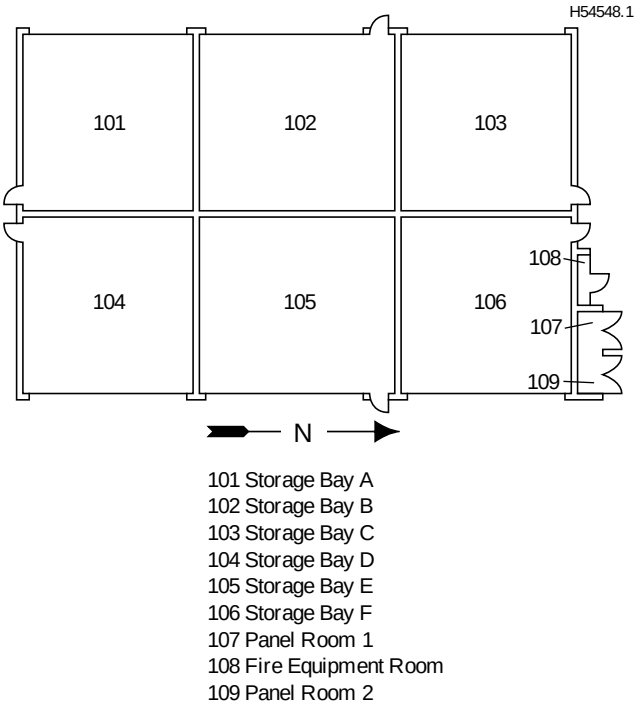

Figure 6-8. Building 3 Detailed Floor Plan, Astrotech

with a maximum roof height of approximately 9.1 m (30 ft). The major areas of Building 4 are the warehouse storage area, bonded storage area, and the Astrotech staff office area.

The large warehouse storage area has a floor area measuring 15.2 by 38.1 m (50 by 125 ft) and a clear

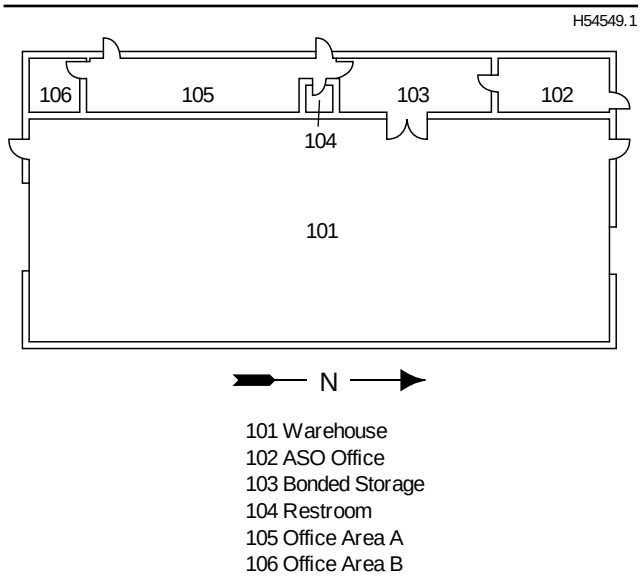

Figure 6-9. Building 4 Detailed Floor Plan, Astrotech

vertical height which varies from 8.5 m (28 ft) along either sidewall to 9.7 m (32 ft) along the lengthwise centerline of the room. While the storage area is protected from the outside weather, there is no environmental control.

The bonded storage area is environmentally controlled and has a floor area measuring 3.6 by 9.7 m (12 by 32 ft).

6.2.1.5 Astrotech Building 5. Building 5 (Figure 6-10) provides office and conference rooms for the spacecraft project.

6.2.1.6 Astrotech Building 6. Building 6 (Figure 6-11) consists of a warehouse storage area and a bonded storage area. The overall plan dimensions of Building 6 are 15.2 m by 18.3 m (50 ft by 60 ft), with maximum roof height of 12.2 m (40 ft).

6.2.2 CCAS Operations and Facilities

Prelaunch operations and testing of Delta II spacecraft at CCAS take place in the following areas:

A. Cape Canaveral industrial area.

B. SLC-17, Pad A or B.

6.2.2.1 Cape Canaveral Industrial Area. A Delta II spacecraft facility located in the CCAS industrial area (Figures 6-12 and 6-13) is NASA-provided Building AE. This checkout facility is complemented by the NASA-provided HPF, where operations with liquid propellant, solid motor, explosive device assembly, and dynamic balancing are conducted.

A brief description of this facility follows. A copy of the Facility Handbook is available if additional details are required.

In addition to this facility, several other USAF-shared facilities or work areas at the CCAS are available for supporting spacecraft projects and the spacecraft contractors. These areas include the following:

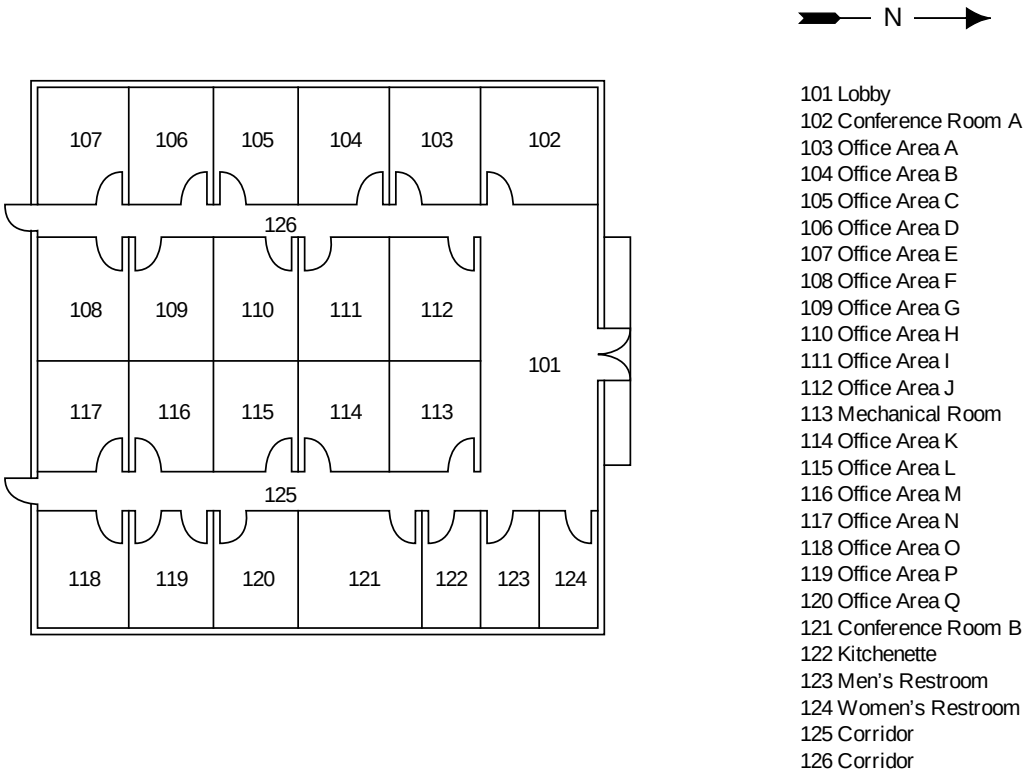

Figure 6-10. Building 5 Detailed Floor Plan, Astrotech

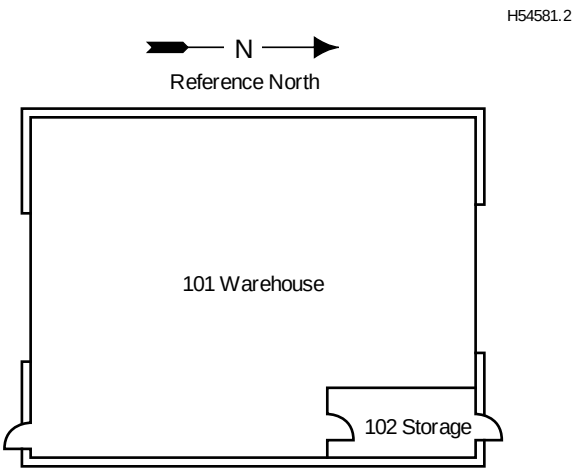

Room	Function	Length	Width	Height	Doorway
101	Warehouse	60 (18.3)	50 (15.2)	40 (12.2)	20 x 40 (6.1 x 12.2)
102	Storage	20 (6.1)	10 (3.1)	8 (2.4)	3-0 x 6-8 (0.9 x 2.0)

Notes:
1. All dimensions are approximate, and shown as feet (meters) or as feet-inches (meters).
2. The walls and ceilings in the warehouse are made of poly-covered insulation. The floor is made of concrete.

Figure 6-11. Building 6 Detailed Floor Plan, Astrotech

- Solid-propellant storage area.
- Explosive storage magazines.
- Electromechanical Test Facility.
- Mission Director Center.
- Liquid propellant storage area.

6.2.2.2 Building AE. Building AE (Figure 6-14), which is also called Hangar AE, is a Butler-type structure that is completely environmentally controlled. Located in the building are the Mission Director Center (MDC), Launch Vehicle Data Center (LVDC), and offices for the spacecraft contractor and spacecraft management personnel. This building also houses the communications equipment that links the Astrotech facility with NASA and USAF voice and data networks at KSC and CCAS.

Mission Director Center. Launch operations and overall mission activities are monitored by the

(D3) H54551.4

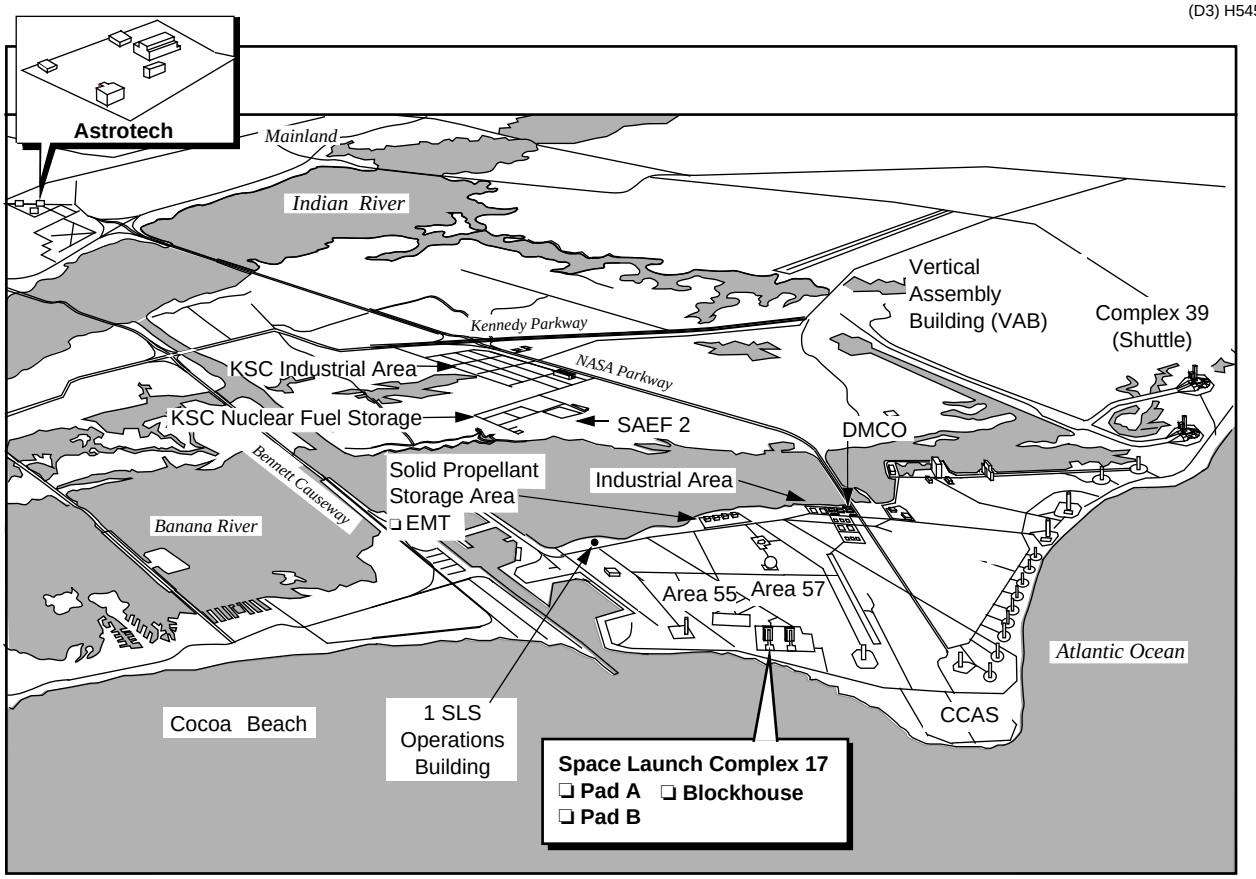

Figure 6-12. Delta Spacecraft Checkout Facilities

H54552.1

SSC 112497

Figure 6-13. Cape Industrial Area

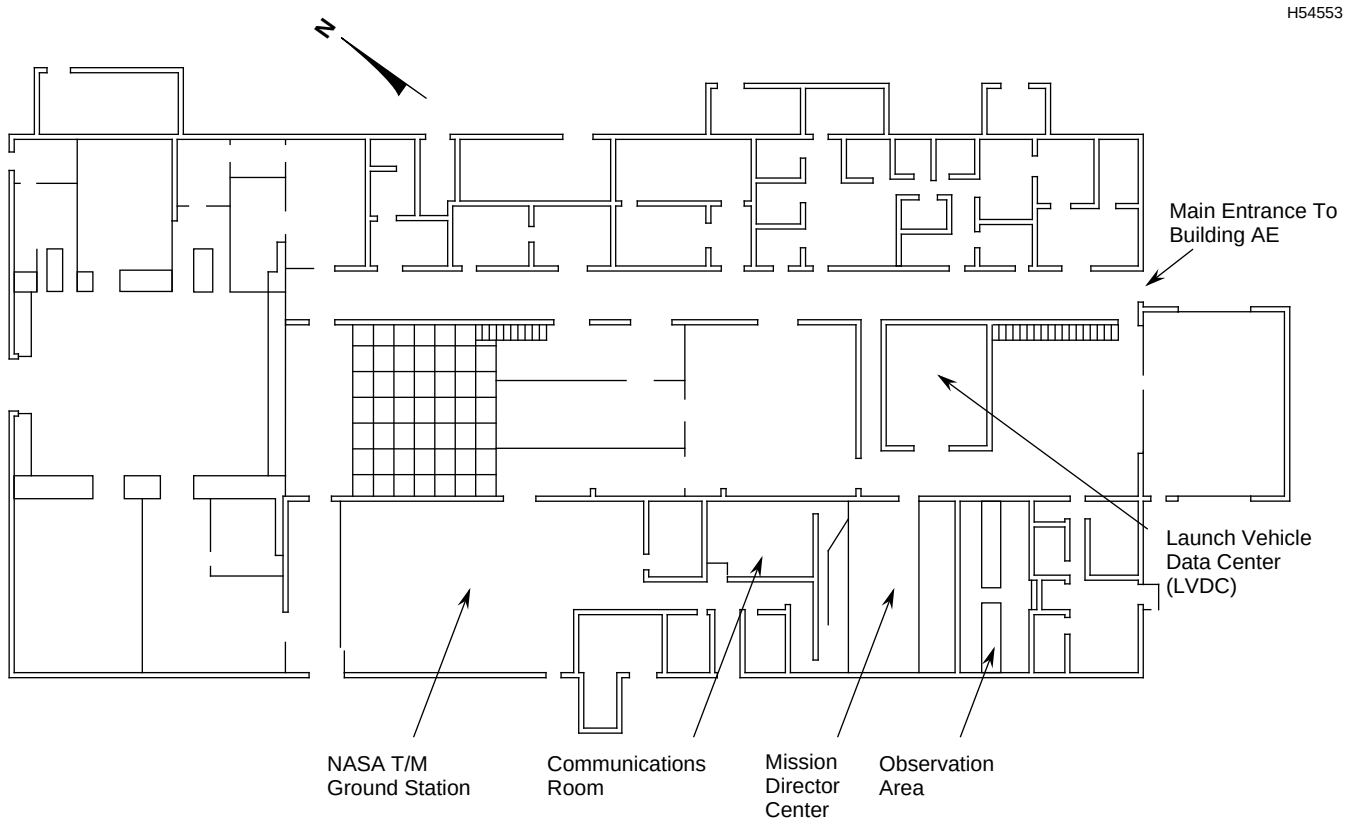

Figure 6-14. Building AE Floor Plan

Mission Director (MD) and the supporting mission management team in the Mission Director Center (Figure 6-15) where the team is informed of launch vehicle, spacecraft, and tracking network flight readiness. Appropriate real-time prelaunch and launch data are displayed to provide a presentation of vehicle launch and flight progress. During launch operations, the Mission Director Center also functions as an operational communications center from which all communication emanates to tracking and control stations. Across the hall from the Mission Director Center is the Launch Vehicle Data Center, where MDA Delta management and technical support personnel are stationed to provide assistance to the launch team in SLC-17 blockhouse and the MD in the Mission Director Center.

At the front of the Mission Director Center are large illuminated displays that list the tracking stations and range stations in use and the sequence of events after liftoff. These displays are used to show present position and instantaneous impact point (IIP) plots. When compared with the theoretical plots, these displays give an overall representation of launch vehicle performance.

6.2.2.3 Spacecraft Assembly and Encapsulation Facility Number 2 (SAEF-2). The SAEF-2 is located at F Avenue and 7th Street in the Hypergol Maintenance Facility Area, KSC Industrial Area. The facility is used for the assembly, test, encapsulation, ordnance work, propellant loading, and pressurization of spacecraft. The facility contains approximately 1556.08 m^2 (16,750 ft^2) of usable floor space. Construction is of reinforced concrete and concrete block. The high bay is a steel frame structure with insulated aluminum siding.

Like all launch support facilities assigned to a particular project or resident contractor group, SAEF-2 is available to other programs on a non-

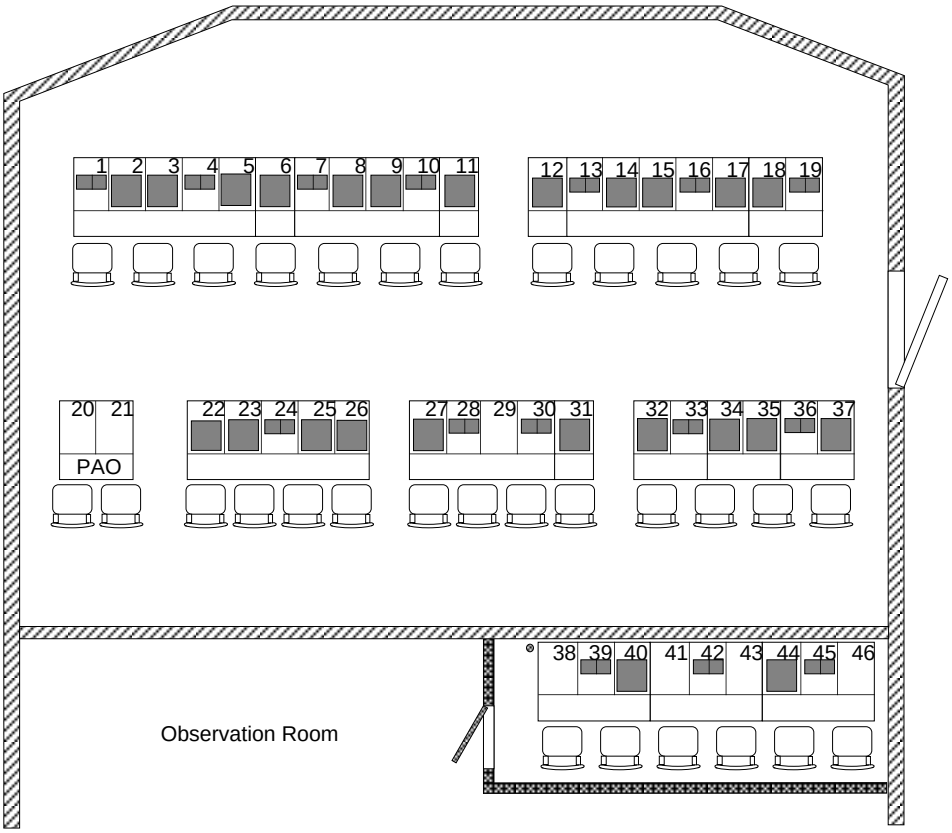

Figure 6-15. Building AE Mission Director Center

interference basis if no other suitable facility is available.

Functional Divisions. Functionally, the building is divided into a clean work area (CWA) complex consisting of an airlock, a high bay, and two low bays; a test cell; support office areas; and mechanical equipment rooms (Figure 6-16). Floors in the airlock, high bay, and test cell are designed for 3175.20 kg (7000 lb) per wheel plus 20% impact loading.

6.2.2.3.1 Airlock. The airlock, located at the north end of the building, measures 12.5 m by 17.7 m (41 ft wide by 58 ft long), providing a usable floor area of 221 m^2 (2378 ft^2) and is rated as a Class 300,000 CWA. The airlock has a clear ceiling height of 15.9 m (52 ft). Access is gained by personnel doors, vestibule, and a 6.4-m by 12.2-m (21.5-ft wide by 40-ft high) vertical lift equipment door. A 6.5-m-wide by 12.1-m-high (21-ft by 39.5-ft) horizontal sliding lift door separates the airlock from the adjacent high bay.

6.2.2.3.2 High Bay. The high bay measures 14.9 m by 30.2 m (49 ft wide by 99 ft long), providing a usable floor area of 450.7 m^2 (4851 ft^2); clear ceiling height is 22.6 m (74 ft) and is rated as a Class 100,000 CWA. Personnel and small equipment can enter the high bay through the equipment airlock, which is equipped with air showers. Clear access is 1.4 m by 2.1 m (4 ft 5 in wide by 6 ft 11 in high).

6.2.2.3.3 Low Bays. Two large bays are located along the west side of the high bay. One of the bays measures 5.8 m wide by 21.9 m long (19 ft by 72 ft) with a clear ceiling height of 7.62 m (25 ft); the other bay is 5.8 m wide by 8.2 m long (19 ft by 27 ft) and has a clear ceiling height of 13.3 m (43.5 ft). The

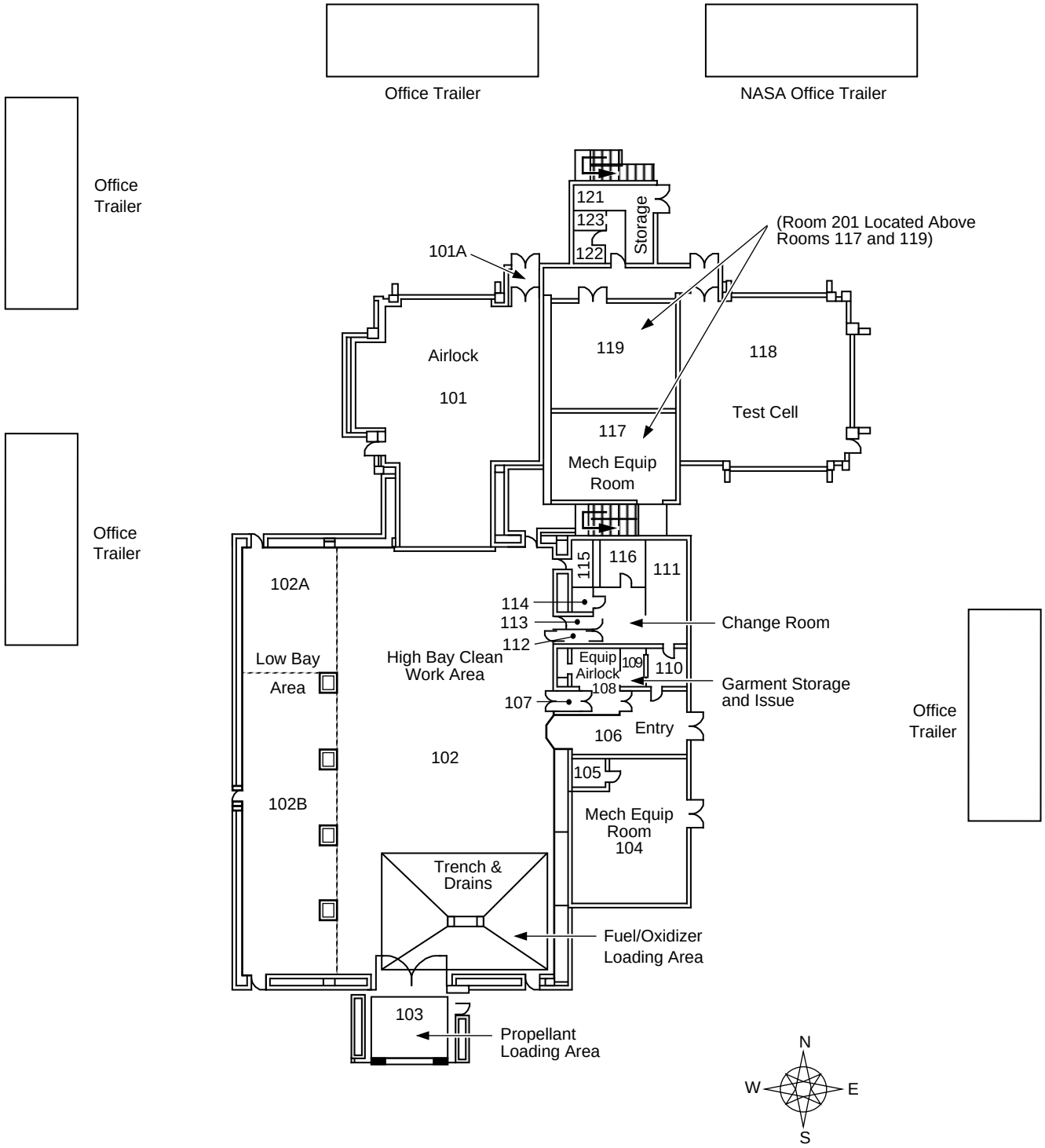

Figure 6-16. SAEF-2 Floor Plan

combined bay areas provide a usable floor space of 174.8 m^2 (1881 ft^2). The low bays are also rated as Class 100,000 CWAs.

6.2.2.3.4 Test Cell. The test cell is located at the northeast corner of the facility. The cell measures 11.3 m by 11.3 m (37 ft by 37 ft), providing a usable floor area of 127.2 m^2 (1369 ft^2). The clear ceiling height is 15.9 m (52 ft). Access to the test cell is gained through personnel doors and three 6.7-m-wide by 12.2-m-high (22-ft by 40-ft) vertical lift doors. The test cell can be used for spacecraft and payload support activities not requiring Class 100,000 CWA conditions.

6.2.2.3.5 Other Rooms. The remainder of the building consists of such support rooms as a mechanical equipment room, communication equipment room, entry and observation room, change room, storage room, miscellaneous equipment rooms, and limited office space.

There is a 13.7-m-long by 8.5-m-wide (45-ft by 28-ft) conference area located on the second floor above rooms 117 and 199.

Room 109 is used as the clean room garment storage and issue room.

6.2.2.3.6 Trailers. There are five 3.7-m by 18.3-m (12-ft by 60-ft) office trailers (Figure 6-16), available for payload personnel use when their payload is in SAEF-2. Two are on the north side of the building; two on the west side; and one on the east side. One of the trailers located on the north side is used by the NASA and PGOC facility managers.

6.2.3 Solid Propellant Storage Area, CCAS

The facilities and support equipment in this area are maintained and operated by the USAF range contractor personnel. Ordnance item transport is also provided by range contractor personnel. Preparation of ordnance items for flight (i.e., S&A device installation, thermal blanket installation, etc.) is performed by spacecraft contractor personnel according to range safety approved procedures.

6.2.4 Storage Magazines, CCAS

Storage magazines are concrete bunker-type structures located at the north end of the storage area. Only two of the magazines are used for spacecraft ordnance. One magazine, designated MAG H, is environmentally controlled to 23.9 ± 2.8°C (75 ± 5°F) with a maximum relative humidity of 65%. This magazine contains small ordnance items such as S&A devices, igniter assemblies, initiators, bolt cutters, electrical squibs, etc.

The second magazine, designated MAG I, is used for the storage of solid propellant motors. It is environmentally controlled to 29.4 ± 2.8°C (85 ± 5°F) with a maximum relative humidity of 65%.

6.2.5 Electrical-Mechanical Testing Facility, CCAS

The Electrical-Mechanical Testing Facility (EMT) (Figure 6-17), which is operated by range contractor personnel, is used for such functions as ordnance item bridgewire resistance checks and S&A device functional tests, as well as for test-firing small self-contained ordnance items.

Electrical cables that provide the interface between the ordnance items and the test equipment already exist for most devices commonly used at CCAS. These cables are tested before each use and the data is documented. In the event that a cable or harness does not exist for a particular ordnance item it is the responsibility of the spacecraft project to provide the proper mating connector for the ordnance item to be tested. A six-week lead time is required for cable fabrication.

The test consoles contain the items listed in Table 6-1. The tests are conducted according to spacecraft contractor procedures which have been approved by range safety personnel.

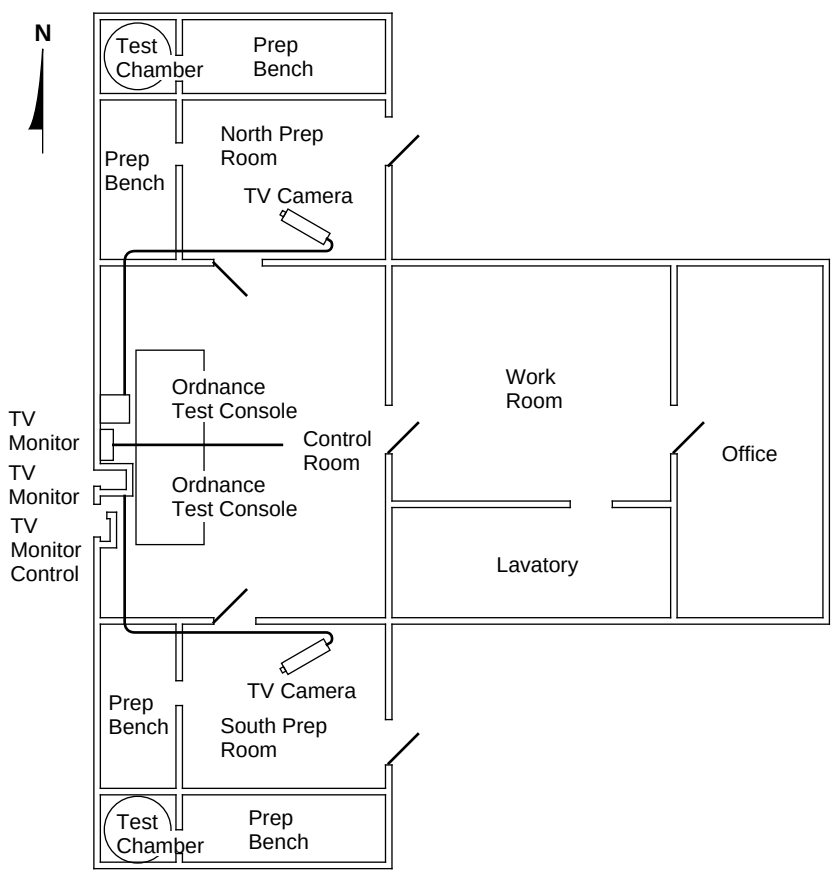

Figure 6-17. Electrical-Mechanical Testing Facility Floor Plan

Table 6-1. Test Console Items

Resistance measurement controls	Alinco bridge and null meter
Digital current meter	Resistance test selector
Digital voltmeter	Digital ammeter
Auto-ranging digital voltmeter	Digital stop watch
Digital multimeter	Relay power supply
High-current test controls	Test power supply
Power supply (5 V)	Power control panel
High-current test power supply	Blower

M029-T018-4/26/93-9:46 AM

6.3 SPACECRAFT TRANSPORT TO LAUNCH SITE

After completion of spacecraft preparations and mating to the PAF in one of the Payload Processing Facilities (PPF) or Hazardous Processing Facilities (HPF), the flight-configured spacecraft is moved to SLC-17 to join with the Delta II launch vehicle. MDA provides a mobile handling container to support spacecraft transfer to the launch pad.

The spacecraft handling can (Figure 6-18) is supported on a rubber-tired transporter and slowly towed to the pad with a MDA-provided tractor. The container (commonly called the handling can) can be configured for either 2- or 3-stage missions. The height of the handling can varies according to the number of cylindrical sections required for a safe envelope around the spacecraft. The spacecraft container is purged with GN_2 to reduce the relative humidity of the air inside the container and to maintain a slight positive pressure. Temperature in the container is not controlled directly, but is maintained at acceptable levels when transporting the spacecraft by selecting the time of day when movement occurs. The transportation environment is monitored with recording instrumentation.

6.4 SLC-17, PADS A AND B (CCAS)

SLC-17 is located in the southeastern section of CCAS (Figure 6-12). It consists of two launch pads (17A and 17B), a blockhouse, ready room, shops,

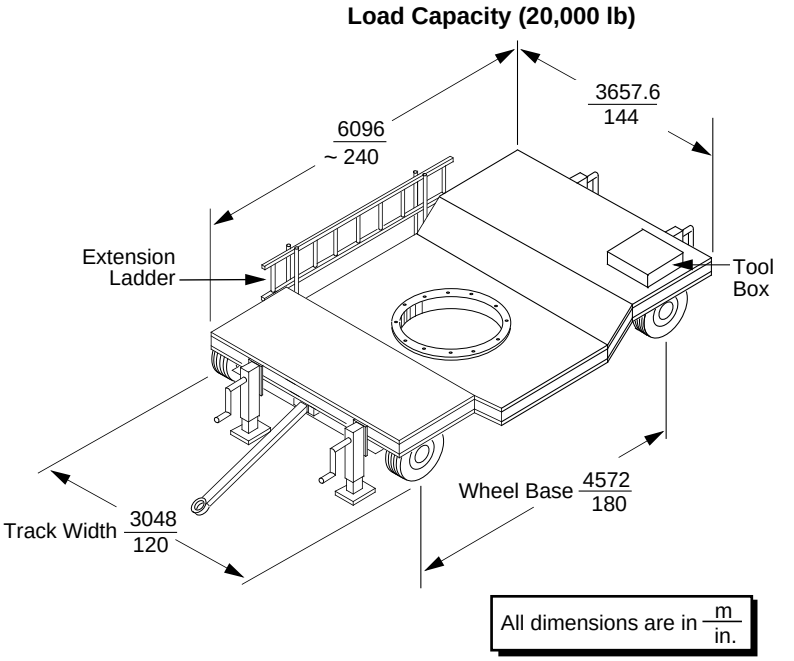

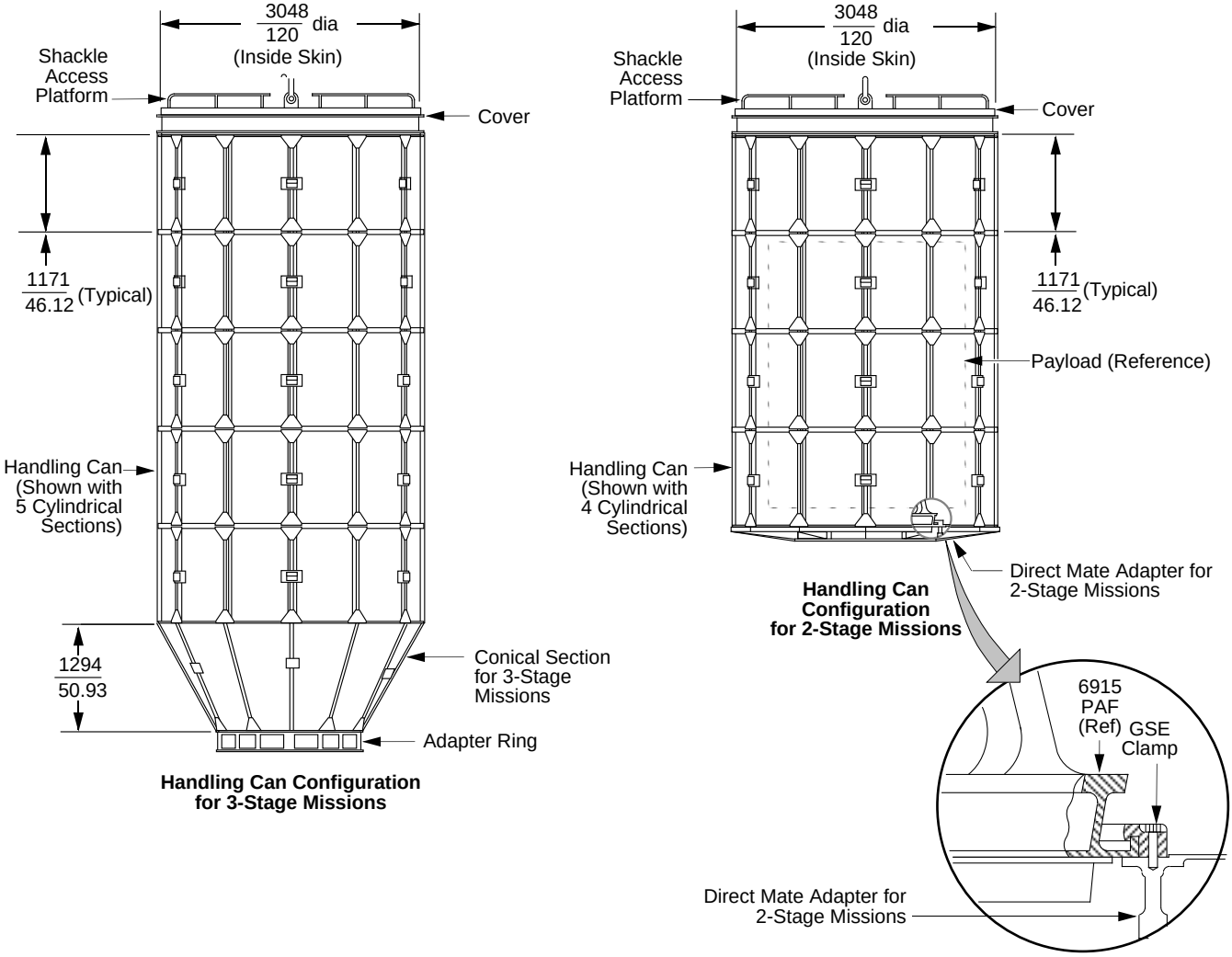

Figure 6-18. Delta II Upper-Stage Assembly Ground-Handling Can and Transporter

and other facilities needed to prepare, service, and launch the Delta II vehicle.

The arrangement of SLC-17 is shown in Figure 6-19 and an aerial view in Figure 6-20.

Since all operations in the launch complex area involve or are conducted in the vicinity of liquid or solid propellants and explosive ordnance devices, the number of personnel permitted in the area, safety clothing to be worn, the type of activity permitted, and equipment allowed are strictly regulated. Adherence to all safety regulations specified in Section 9 is required. Safety briefings on these subjects are given for those required to work in the launch complex area.

A changeout room is provided on the MST on level 9 for use by spacecraft programs requiring this service.

6.4.1 MST Spacecraft Work Levels

The number of personnel admitted to the MST is governed by safety requirements and by the limited amount of work space on the spacecraft levels. The relationship of the vehicle to the MST is shown in Figure 6-21. Typical MST deck-level floor plans of pads 17A and 17B are shown in Figures 6-22, 6-23, and 6-24.

Outlets for electrical power and helium, nitrogen, and breathing air are provided on MST levels 9A and 9B. See Figures 6-22 and 6-23 for locations.

Communications equipment provided on MST levels 9A, 9B, and 9C includes telephones and operational communications stations for test support. See Figures 6-22, 6-23, and 6-24 for locations.

6.4.2 SLC 17 Blockhouse

Launch operations will be controlled from the blockhouse until transition to the new 1st Space Launch Squadron Operations Building (1 SLS OB). Prior to transition to the 1 SLS OB, the blockhouse is equipped with all of the vehicle monitoring and control equipment. Floor space is also allocated in the blockhouse for the spacecraft consoles and console operations (Figure 6-25). After transition, floorspace will continue to be allocated for remote controlled spacecraft consoles and battery charging equipment. MDA will provide an interface for control and battery charging signals via fiber to the 1 SLS OB. Terminal board connections in the spacecraft-to-blockhouse junction box (Figure 6-26 provide electrical connection to the spacecraft umbilical wires.

6.4.3 First Space Launch Squadron Operations Building (1 SLS OB)

In the mid-1997 to early-1998 timeframe, the 1 SLS OB will be commissioned and all launch operations will be controlled from the Launch Control Center (LCC) located on the second floor of the 1 SLS OB (Figure 6-27). The launch vehicle and GSE will be controlled and monitored from the OB via the advanced launch vehicle control system (ALCS). There are two spacecraft control rooms and office space, adjacent to the LCC on the second floor, available during processing and launch. Communication equipment, located in each Control Room, will provide signal interface between the 1 SLS OB and the blockhouse, as shown in Figure 6-28. Also, standard fiber optic communication bus interfaces (i.e. EIA-422, RS-485, RS-488, EIA-232 will be available for remote spacecraft equipment monitoring and control.

MDA is currently polling the spaecraft customers to determine the best ways to meet their needs anticipating their interface requiremetns to include PCM data, discretes, analog data, and RS232, 422, 485 and 488 IEEE standards.

The range spacecraft interface spacecraft S&A enable will be remoted from the PSSC console in the OB to the ACS-R-B/H rack. The spacecraft inteface will use the same pin connector definition as the present spacecraft/PSSC Interface.

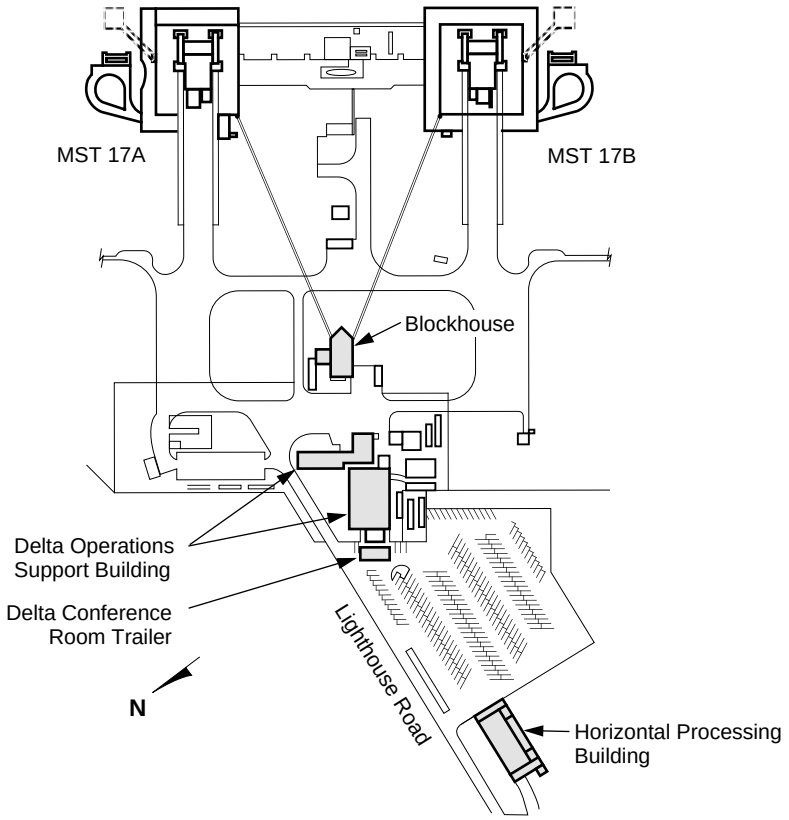

Figure 6-19. SLC-17, CCAS

Figure 6-20. SLC-17 – Aerial View, Facing South

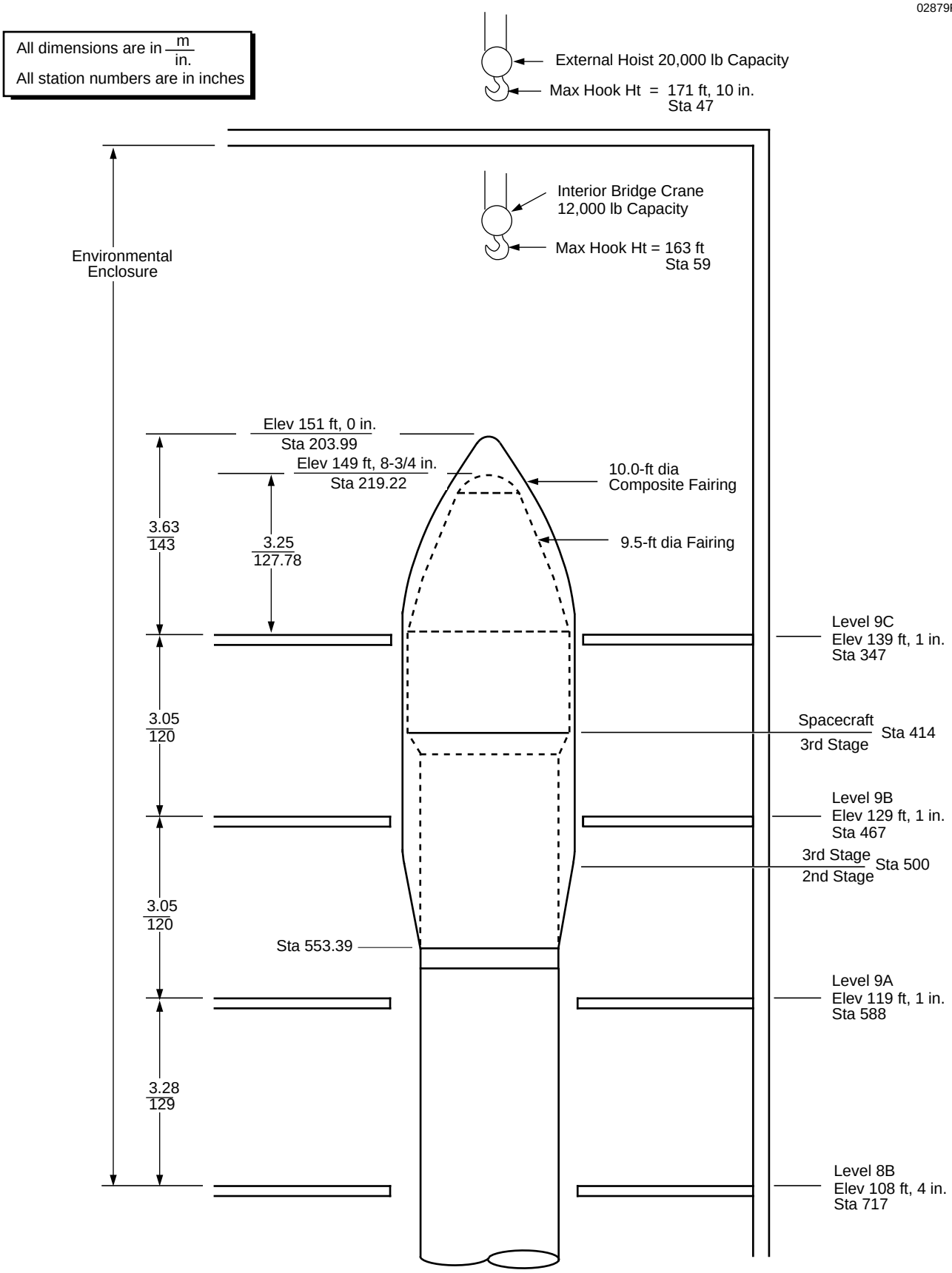

Figure 6-21. Environmental Enclosure Work Levels (Download Figure)

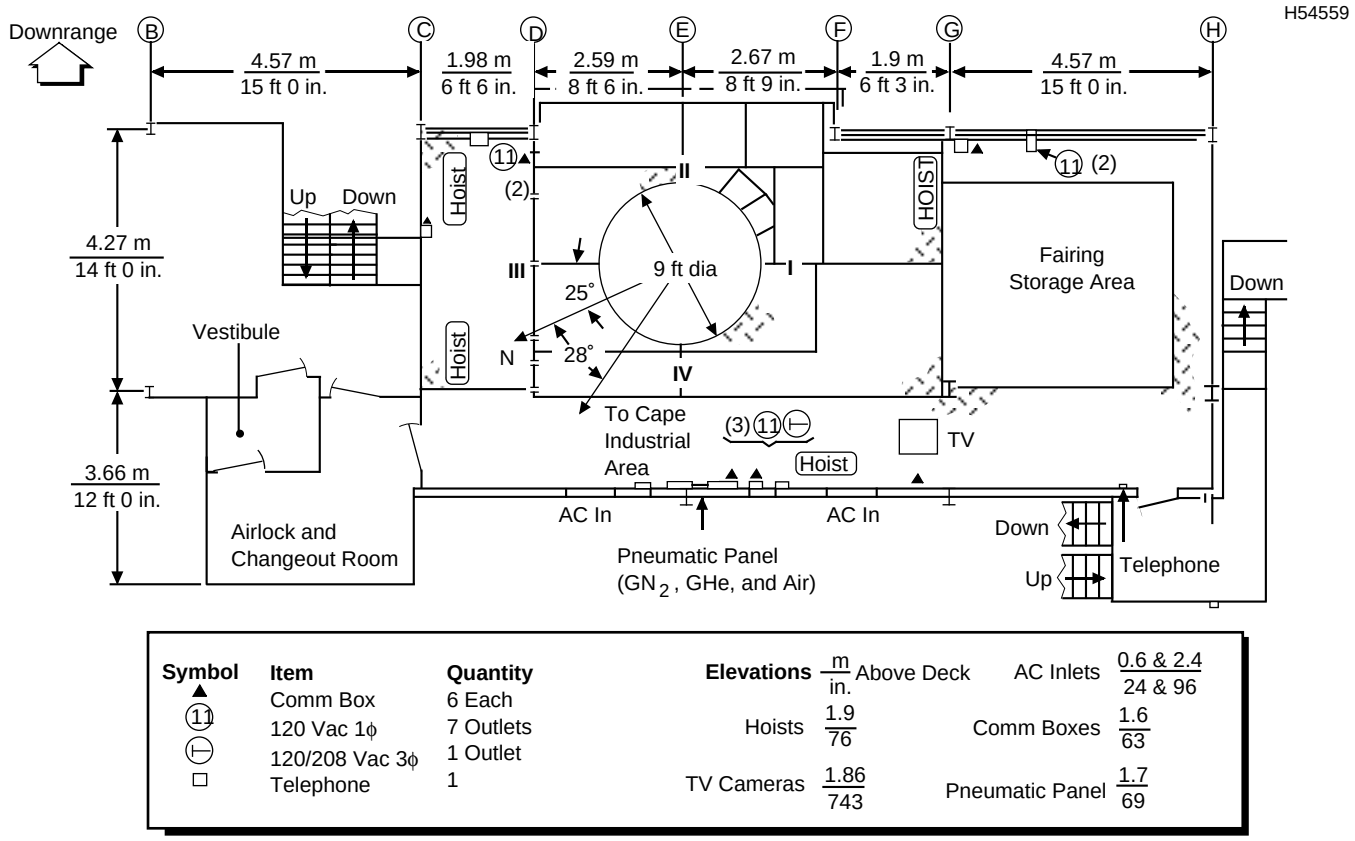

Figure 6-22. Level 9A Floor Plan, Pads 17A and 17B

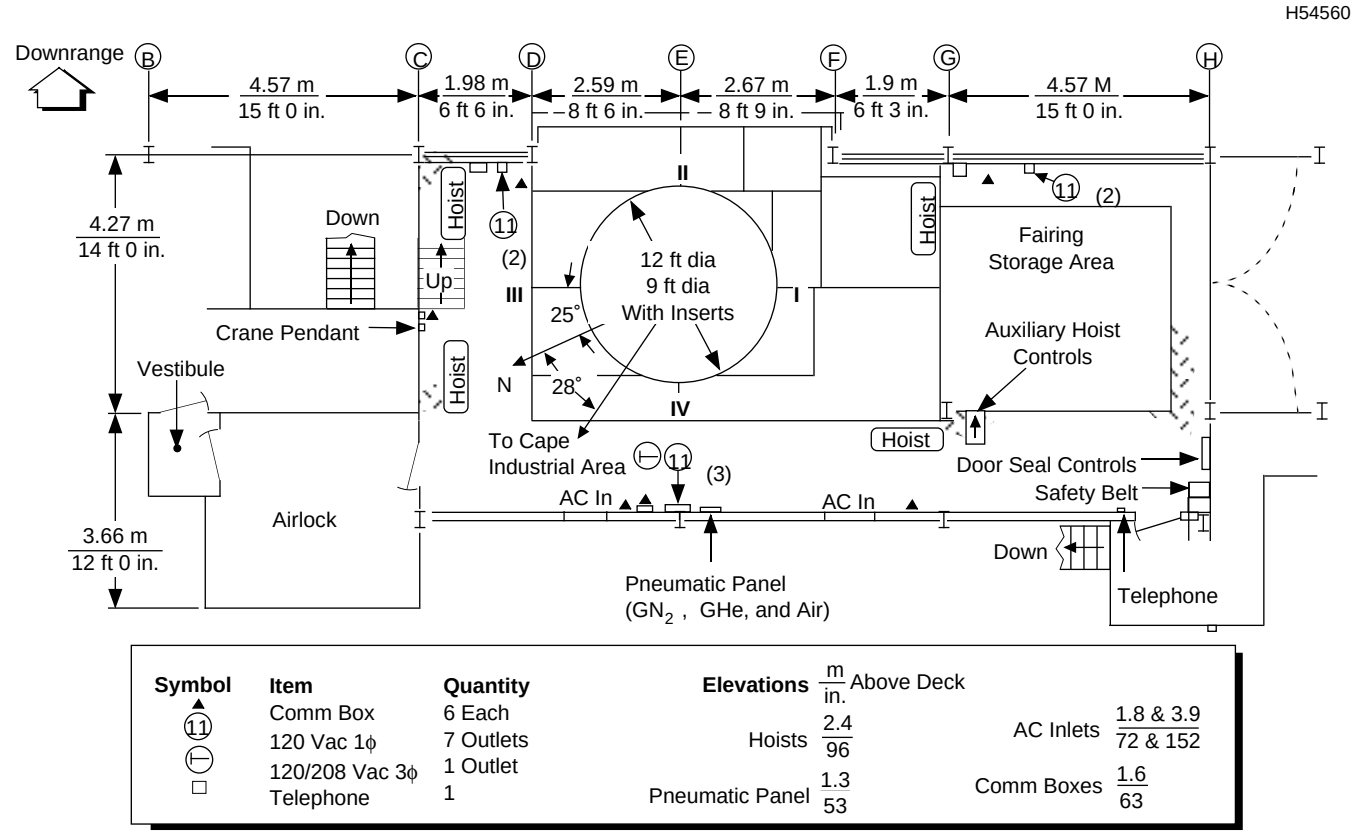

Figure 6-23. Level 9B Floor Plan, Pads 17A and 17B

H54561.2

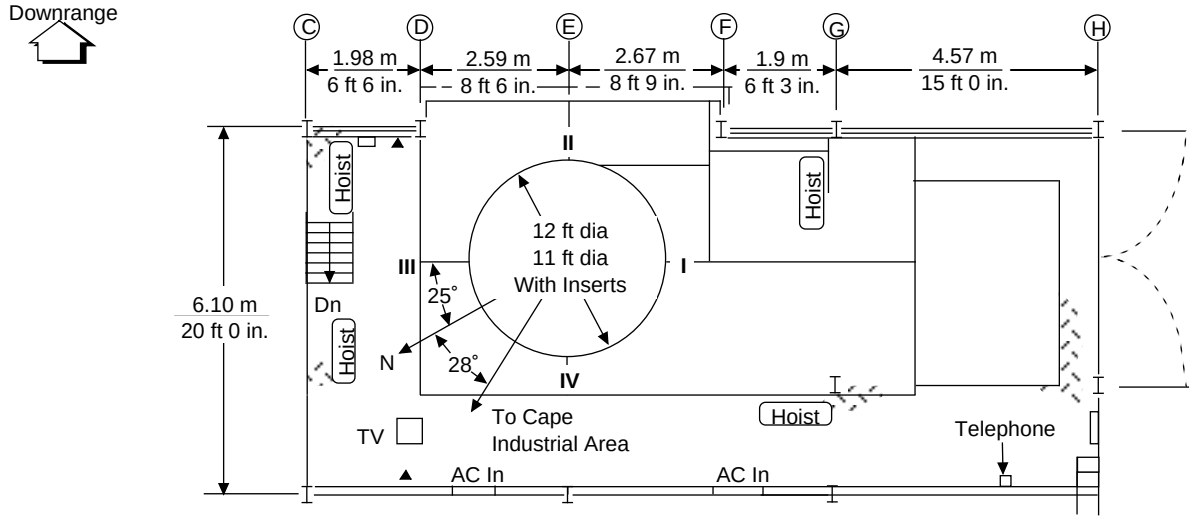

Symbol	Item	Quantity
▲	Comm Box	2 Each
□	Telephone	1

Elevations	m / in. Above Deck
Hoists	2.4 / 96
AC Inlets	1.8 & 3.9 / 72 & 152
Comm Boxes	1.6 / 63

Figure 6-24. Level 9C Floor Plan, Pads 17A and 17B

H53562

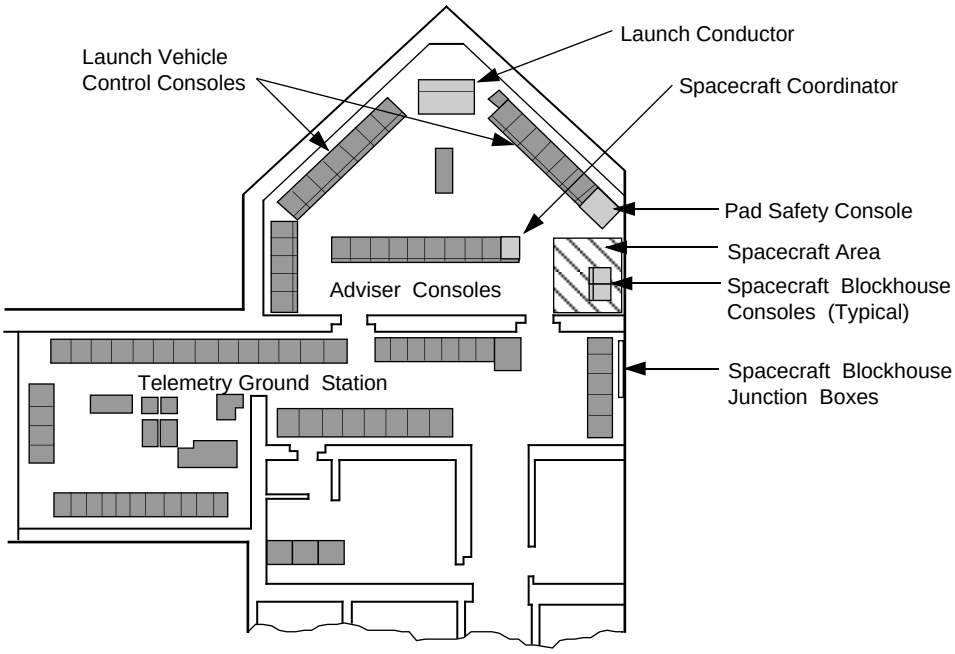

Figure 6-25. Blockhouse Console Locations

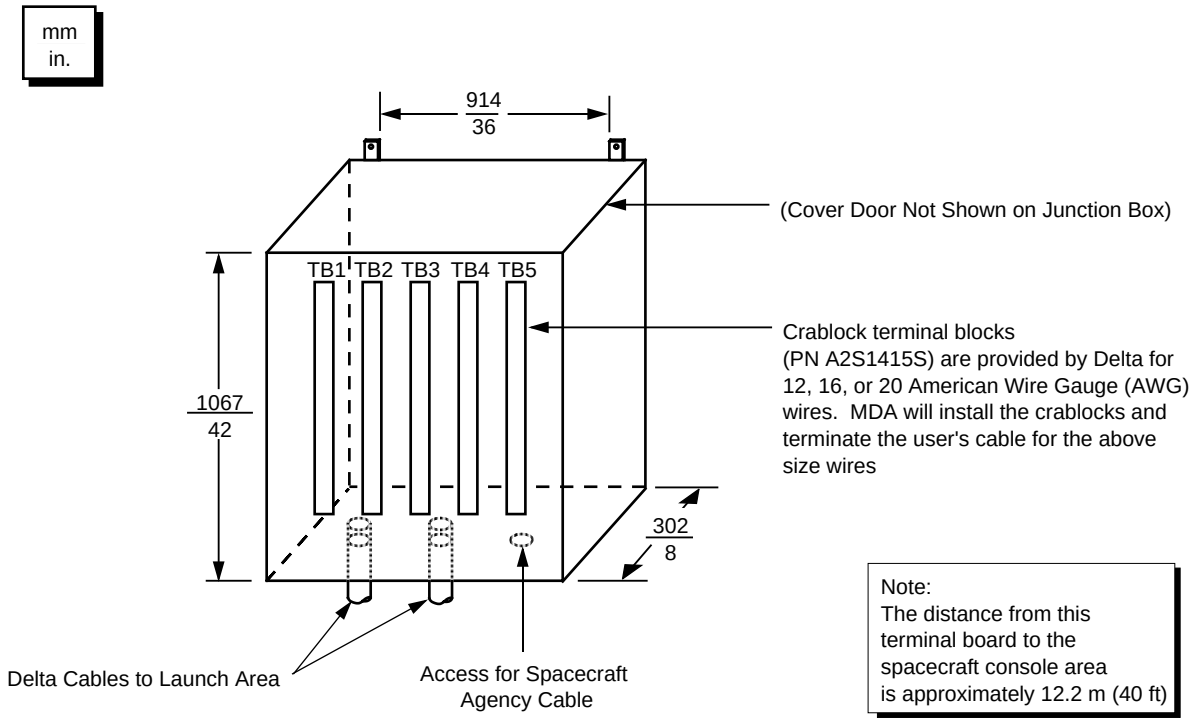

Figure 6-26. Spacecraft-to-Blockhouse Junction Box

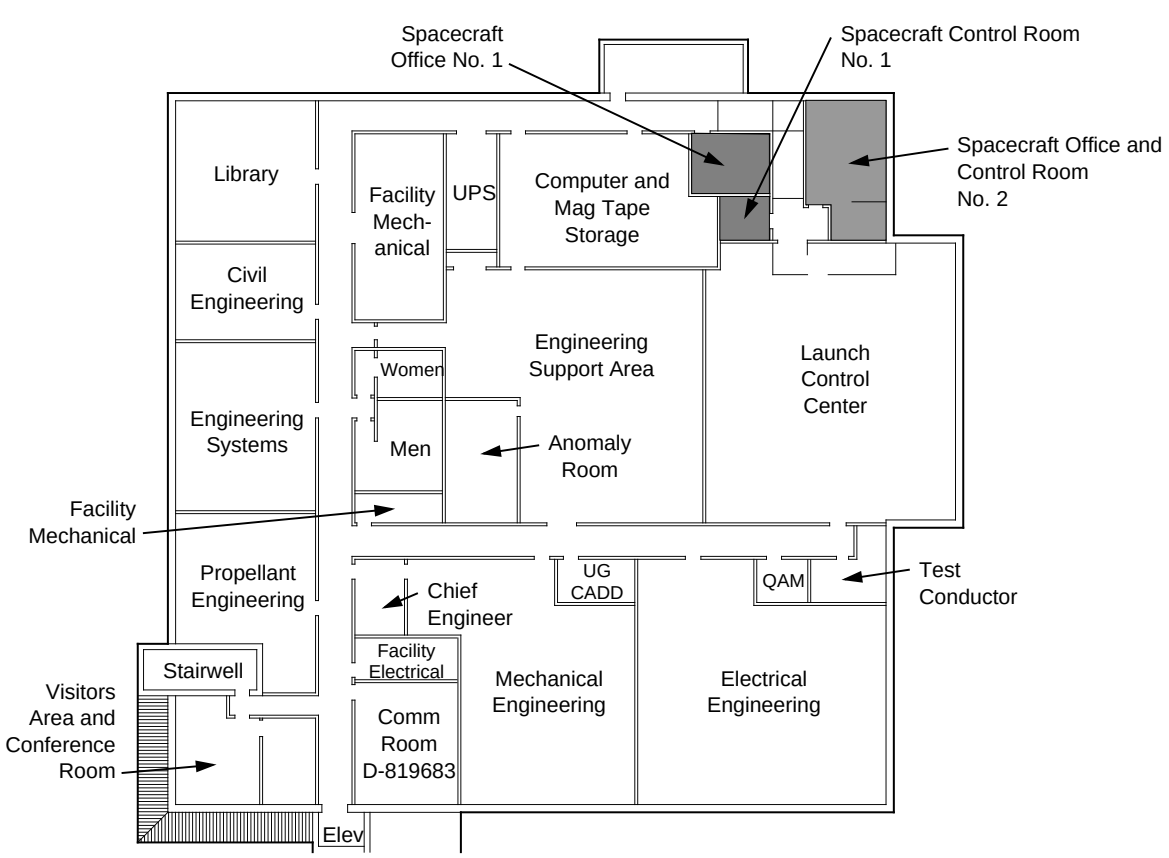

Figure 6-27. Spacecraft Customer Accommodations – Launch Control Center

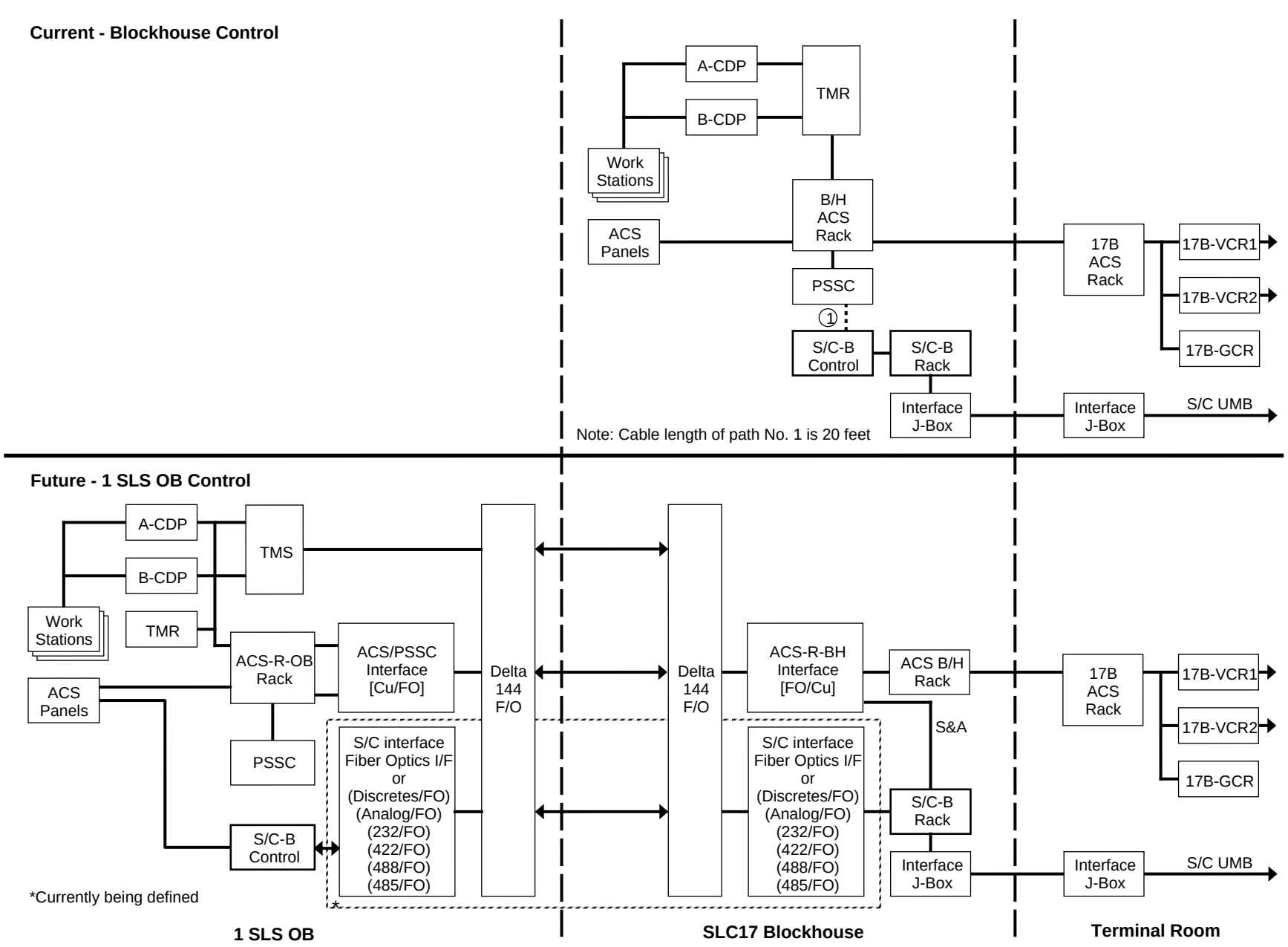

Figure 6-28. Interface Overview - Spacecraft Control Rack in 1 SLS OB

6.5 SUPPORT SERVICES

6.5.1 LAUNCH SUPPORT

For countdown operations, the launch team is located in the blockhouse at SLC-17 and Hangar AE with support from many other organizations.

The following paragraphs describe the organizational interfaces and the launch decision process.

6.5.1.1 Mission Director Center (Hangar AE). The Mission Director Center provides the necessary seating, data display, and communication to control the launch process. Seating is provided for key personnel from MDA, eastern range, and the spacecraft control team. For NASA launches, key NASA personnel also occupy space in the Mission Director Center. Government launches incorporate additional reporting and decision responsibility.

6.5.1.2 Launch Decision Process. The launch decision process is conducted by the appropriate management personnel representing the spacecraft, the launch vehicle, and the range. Figure 6-29 shows the typical communication flow required to make the launch decision. For NASA missions, a Mission Director, launch management advisory team, engineering team, and quality assurance personnel will also participate in the launch decision process.

6.5.2 Weather Constraints

6.5.2.1 Ground-Wind Constraints. The Delta II vehicle is enclosed in the MST until approximately L-7 hours. The tower protects the vehicle from ground winds. The winds are measured using anemometers at the 9.1-m (30-ft) and 28.0-m (92-ft) levels of the tower.

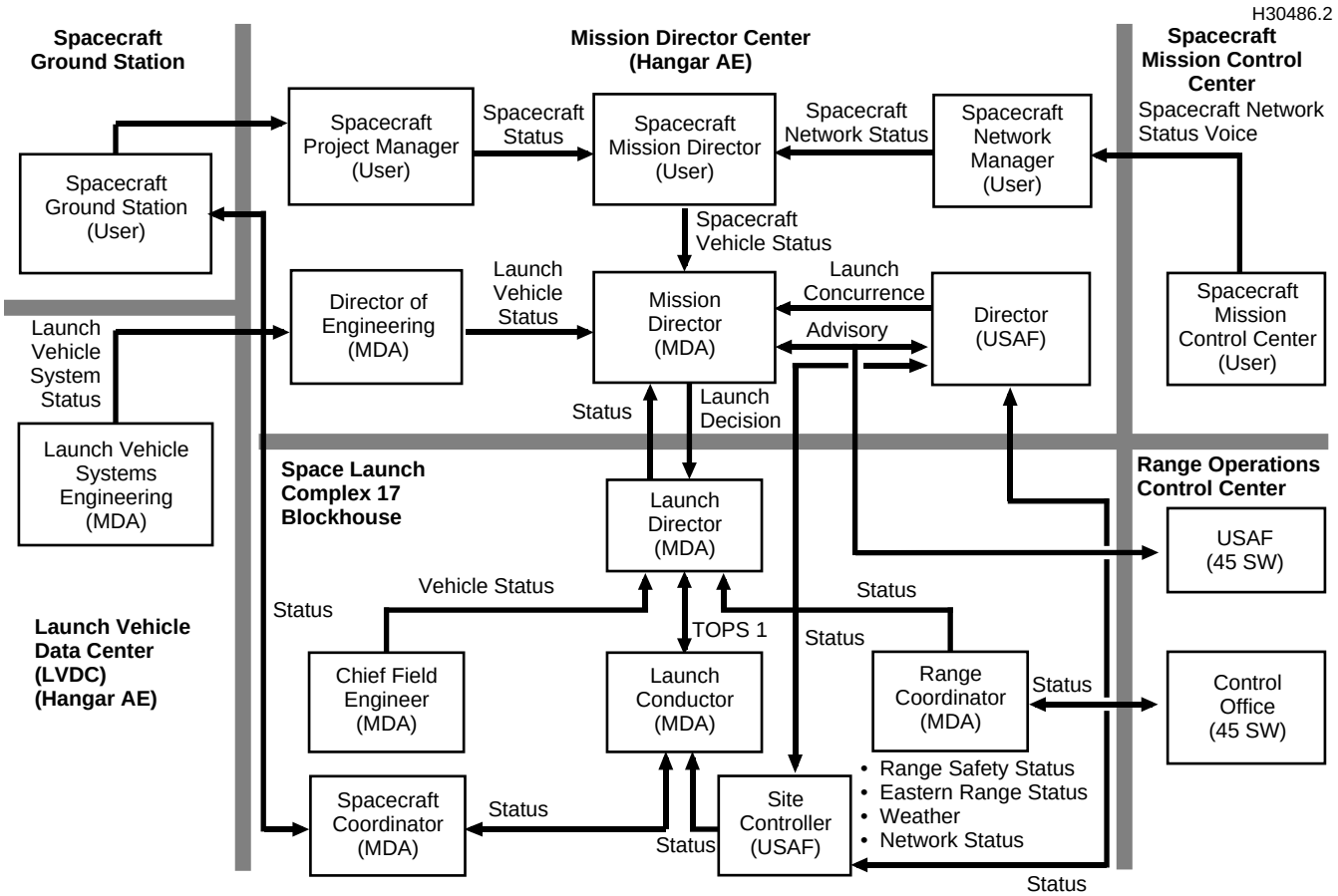

Figure 6-29. Launch Decision Flow for Commercial Missions–Eastern Range

The following limitations on ground winds (including gusts) apply:

A. The MST shall not be moved from the Delta II if ground winds in any direction exceed 36 knots (41 mph) at the 9.1-m (30-ft) level.

B. The maximum allowable ground winds at the 28.0-m (92-ft) level are shown on Figure 6-30 for 792X vehicles with lengthened nozzles on the air-ignited GEMs. As noted on the figure, the constraints are a function of the predicted liftoff solid motor propellant bulk temperature. This figure applies to both 9.5-ft and 10-ft diameter fairing configurations. The plot combines liftoff controls, liftoff loads, and on-stand structural ground wind restrictions.

6.5.2.2 Winds Aloft Constraints. Measurements of winds aloft are taken at the launch pad. The Delta II controls and loads constraints for winds aloft are evaluated on launch day by conducting a trajectory analysis using the measured wind. A curvefit to the wind data provides load relief in the trajectory analyses. The curvefit and other load-relief parameters are used to reset the mission constants just prior to launch.

6.5.2.3 Weather Constraints. Weather constraints are imposed by Range Safety to assure safe passage of the Delta launch vehicle through the atmosphere. The following is a general overview of the constraints evaluated prior to liftoff. Appendix B lists the detailed weather contraints.

A. The launch will not take place if the normal flight path will carry the vehicle:

1. Within 18.5 km (10 nmi) of a cumulonimbus (thunderstorm) cloud, whether convective or in layers, where precipitation (or virga) is observed.

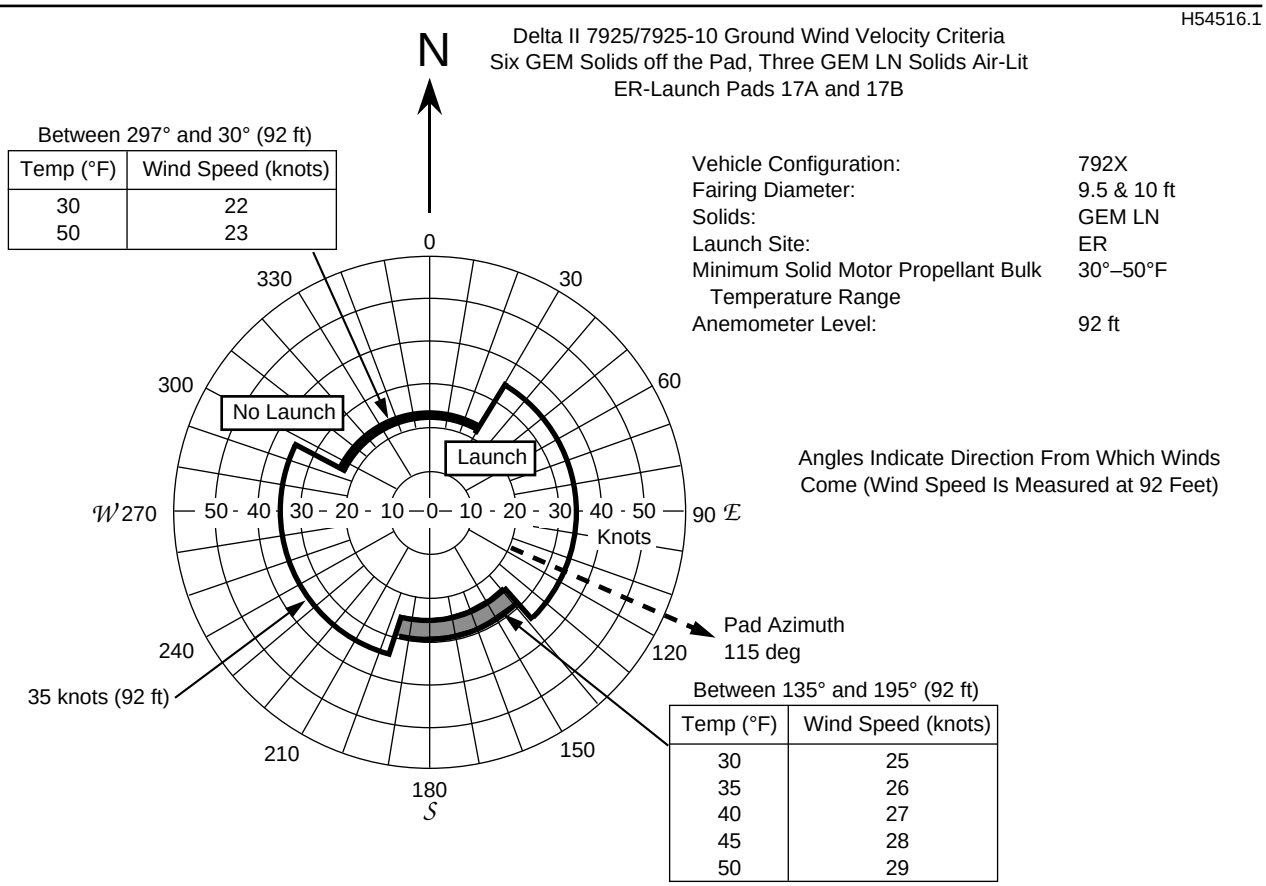

Figure 6-30. Delta II 792X Ground Wind Velocity Criteria, SLC-17

2. Through any cloud, whether convective or in layers, where precipitation or virga is observed.
3. Through any frontal or squall-line clouds which extend above 3048 m (10,000 ft).
4. Through cloud layers or through cumulus clouds where the freeze level is in the clouds.
5. Through any cloud if a plus or minus 1 kV/m or greater level electric field contour passes within 9.3 km (5 nmi) of the launch site at any time within 15 min prior to liftoff.
6. Through previously electrified clouds not monitored by an electrical field mill network if the dissipating state was short-lived (less than 15 min after observed electrical activity).

B. The launch will not take place if there is precipitation over the launch site or along the flight path.

C. A weather observation aircraft is mandatory to augment meteorological capabilities for real-time evaluation of local conditions unless a cloud-free line of sight exists to the vehicle flight path. Rawinsonde will not be used to determine cloud buildup.

D. Even though the above criteria are observed, or forecast to be satisfied at the predicted launch time, the launch director may elect to delay the launch based on the instability of the current atmospheric conditions.

6.5.2.4 Lightning Activity. The following are procedures for test status during lightning activity:

A. Evacuation of the MST and fixed umbilical tower (FUT) is accomplished at the direction of the Launch Conductor (Reference: Delta Launch Complex Safety Plan).

B. First- and second-stage instrumentation may be operated during an electrical storm.

C. If other vehicle electrical systems are powered when an electrical storm approaches, these systems may remain powered.

D. If an electrical storm passes through after a simulated flight test, all electrical systems are turned on in a quiescent state, and all data sources are evaluated for evidence of damage. This turn-on is done remotely (pad clear) if any category A ordnance circuits are connected for flight. Ordnance circuits are disconnected and safed prior to turn-on with personnel exposed to the vehicle.

E. If data from the quiescent turn-on reveal equipment discrepancies that can be attributed to the electrical storm, a flight program requalification test must be run subsequent to the storm and prior to a launch attempt.

6.5.3 Operational Safety

Safety requirements are covered in Section 9 of this manual. In addition, it is the operating policy at both MDA and Astrotech that all personnel will be given safety orientation briefings prior to entrance to hazardous areas such as SLC-17. These briefings will be scheduled by the MDA spacecraft coordinator and presented by the appropriate safety personnel.

6.5.4 Security

6.5.4.1 Astrotech Security. Physical security at the Astrotech facilities is provided by chain link perimeter fencing, door locks, and guards. Details of the spacecraft security requirements will be arranged through the MDA spacecraft coordinator.

6.5.4.2 Launch Complex Security. SLC-17 physical security is ensured by perimeter fencing, guards, and access badges. The MST white room is a Defense Investigative Service-approved closed

area with cypher locks on entry-controlled doors. Access can be controlled by a security guard on the MST eighth level.

6.5.4.3 CCAS Security. For access to CCAS, US citizens must provide full name with middle initial if applicable, social security number, company name, and dates of arrival and expected departure to the MDA spacecraft coordinator or MDA/CCAS Security. MDA Security will arrange for entry authority for commercial missions or individuals sponsored by MDA. Access by NASA personnel or NASA sponsored Foreign nationals is coordinated by NASA KSC with the USAF at CCAS. Access by other US Government sponsored Foreign Nationals is coordinated by their sponsor directly with the USAF at CCAS. For non-United States citizens, clearance information (name, nationality/citizenship, data and place of birth, passport number and date/place of issue, visa number and date of expiration, and title or job description) must be furnished to MDA 2 weeks prior to the CCAS entry date. Government sponsored individuals must follow NASA or US Government guidelines as appropriate. The spacecraft coordinator will furnish visitor identification documentation to the appropriate agencies. After MDA Security gets clearance approval, entry to CCAS will be the same as for US citizens.

6.5.5 Field-Related Services

MDA employs certified propellant handler's ensemble (PHE) suit propellant handlers, equipment drivers, welders, riggers, and explosive ordnance handlers, in addition to people experienced in most electrical and mechanical assembly skills, such as torquing, soldering, crimping, precision cleaning, and contamination control. MDA has under its control a machine shop, metrology laboratory, LO_2 cleaning facility, proof-load facility, and hydrostatic proof test equipment. MDA's operational team members are familiar with the payload processing facilities at the CCAS, KSC, and Astrotech, and can offer all of these skills and services to the spacecraft project during the launch program.

6.6 DELTA II PLANS AND SCHEDULES

6.6.1 Mission Plan

A mission plan (Figure 6-31) is developed for each launch campaign showing major tasks on a weekly timeline format. The plan includes launch vehicle activities, prelaunch reviews, and spacecraft PPF and HPF occupancy time.

6.6.2 Integrated Schedules

The schedule of spacecraft activities before integrated activities in the HPF varies from mission to mission. The extent of spacecraft field testing varies and is determined by the spacecraft agency.

Spacecraft/launch vehicle schedules are similar from mission to mission, from the time of spacecraft weighing until launch.

Daily schedules are prepared on hourly time lines for these integrated activities. These schedules typically cover four days of integration effort in the HPF and eight days of launch countdown activities. HPF tasks include spacecraft weighing, spacecraft third-stage mate and interface verification, and transportation can assembly around the combined payload. The countdown schedules provide a detailed, hour-by-hour breakdown of launch pad operations, illustrating the flow of activities from spacecraft erection through terminal countdown and reflecting inputs from the spacecraft project. These schedules comprise the integrating document to ensure timely launch pad operations.

Typical schedules of integrated activities from spacecraft weighing in the HPF until launch (Figures 6-32 through 6-45) are shown as launch minus

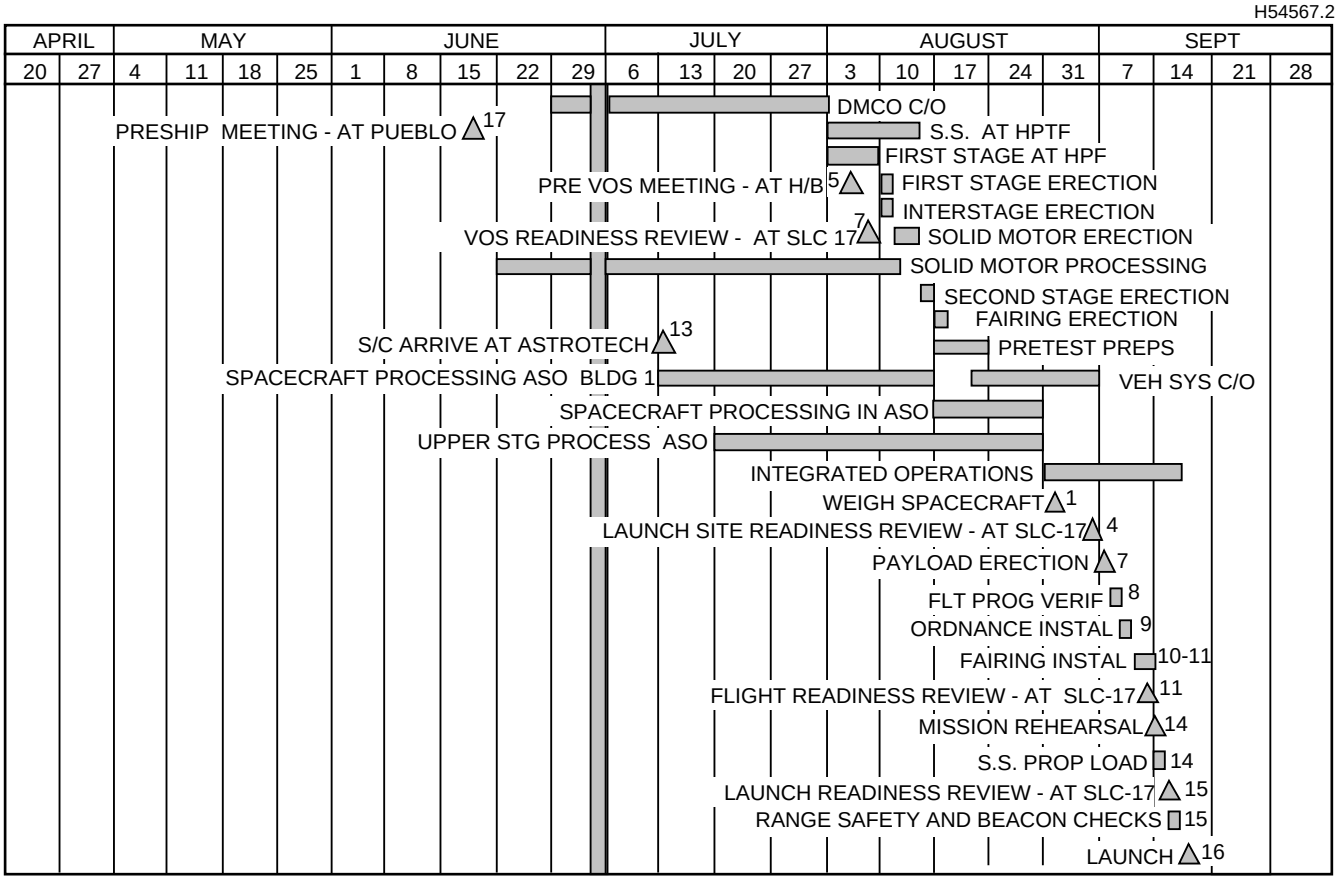

Figure 6-31. Typical Mission Plan

H54568

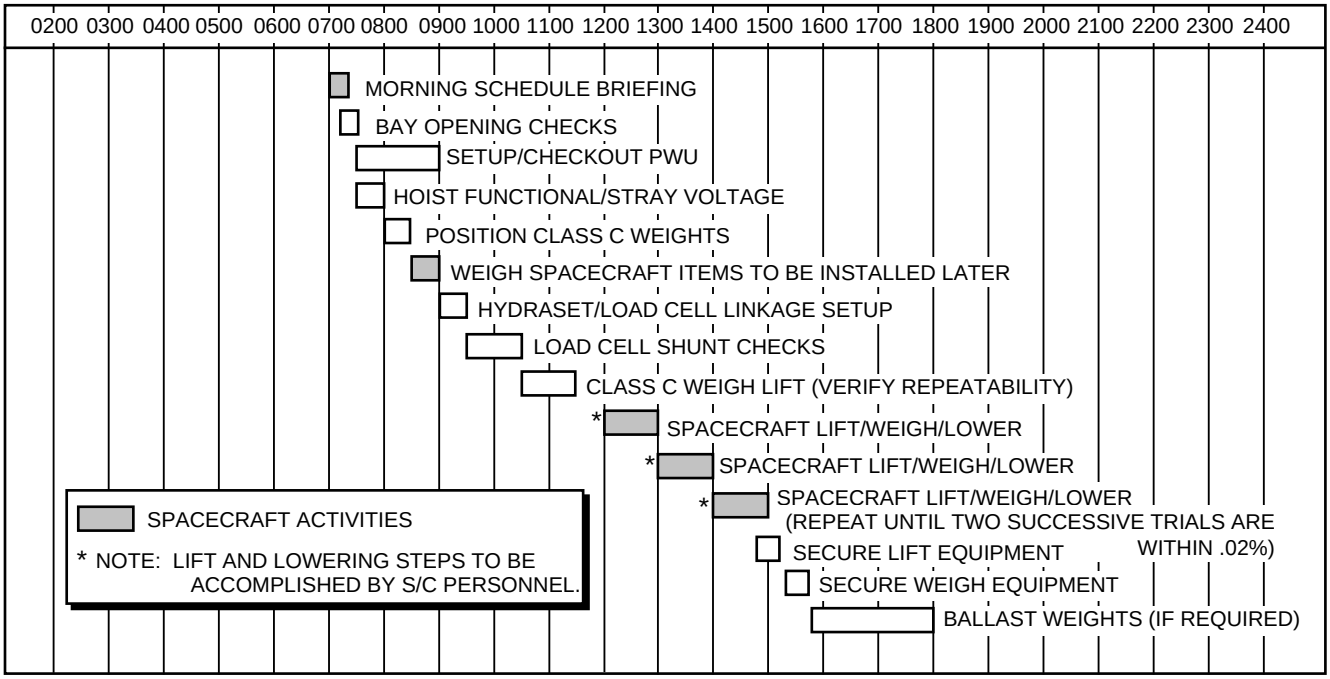

Figure 6-32. Typical Spacecraft Weighing (F-11 Day)

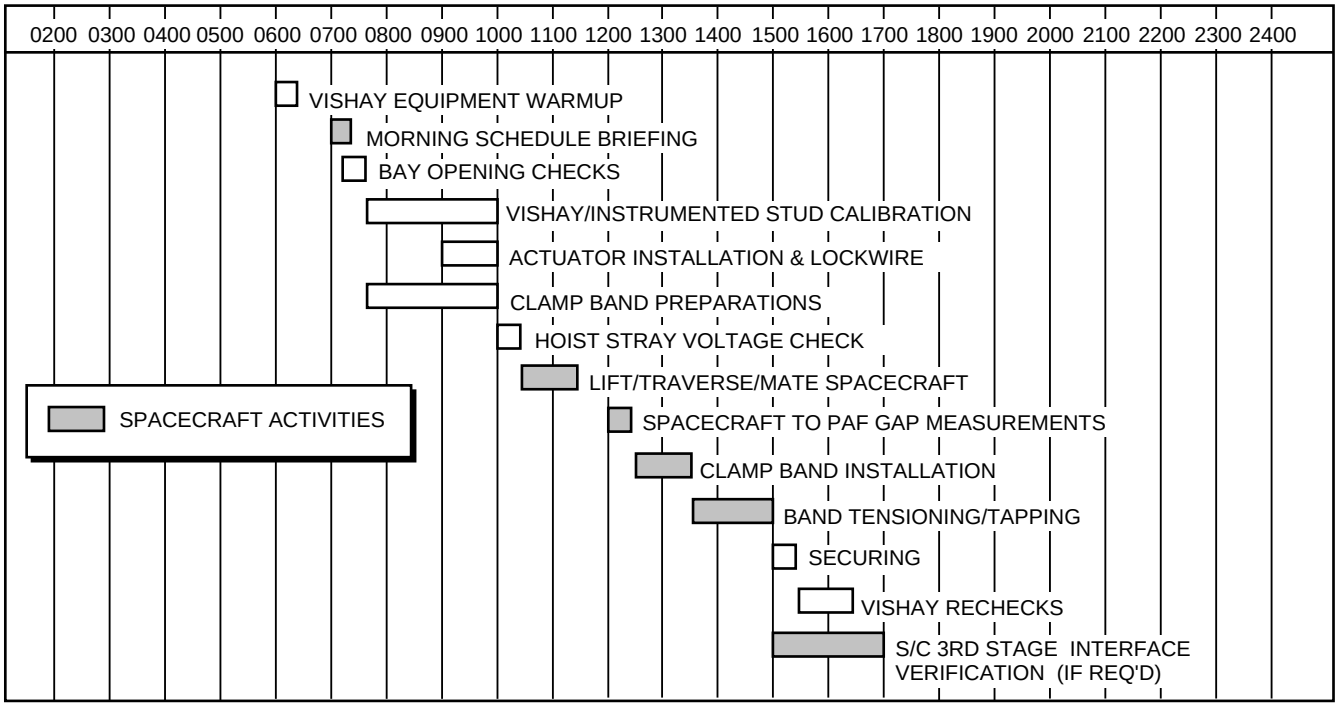

Figure 6-33. Typical Mating of Spacecraft and Third-Stage (F-10 Day)

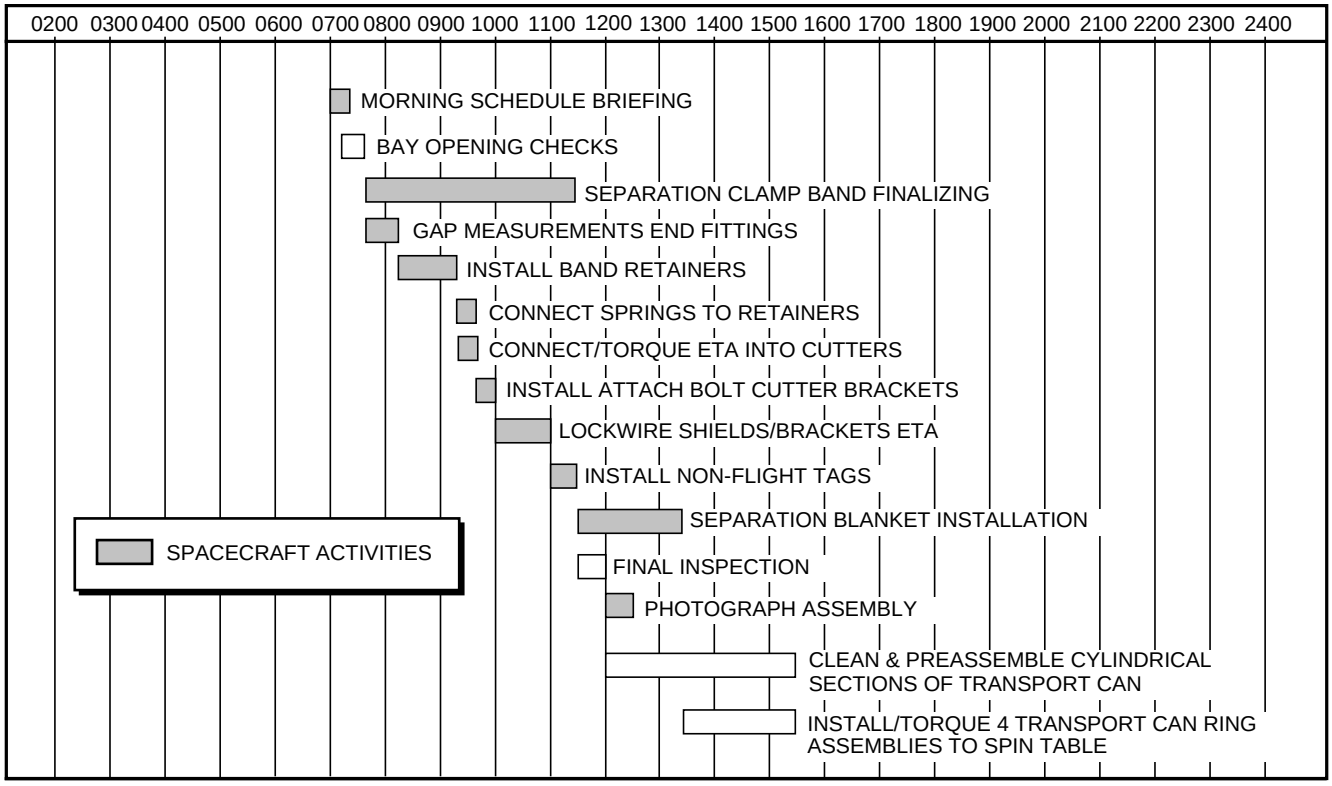

Figure 6-34. Typical Final Spacecraft Third-Stage Preparations (F-9 Day)

H54571

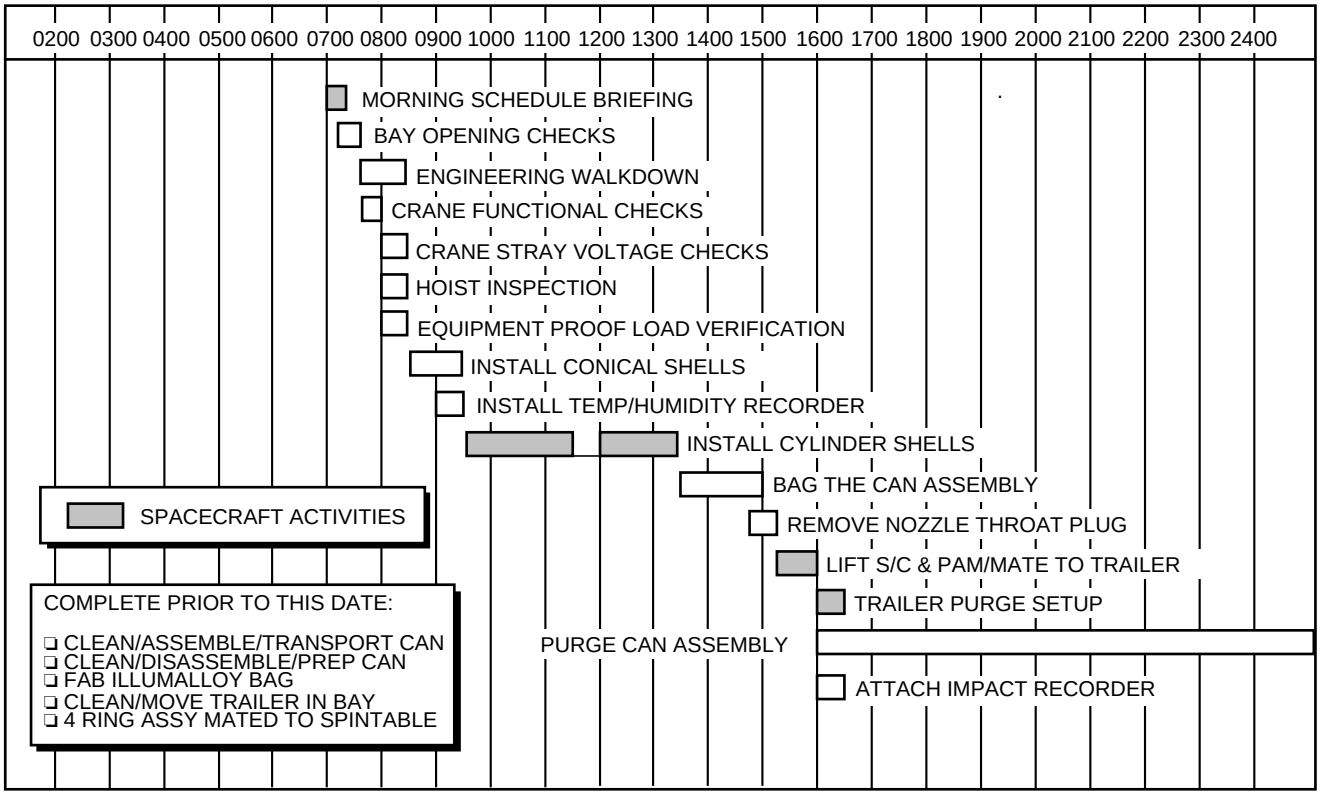

Figure 6-35. Typical Installation of Transportation Can (F-8 Day)

H54572.1

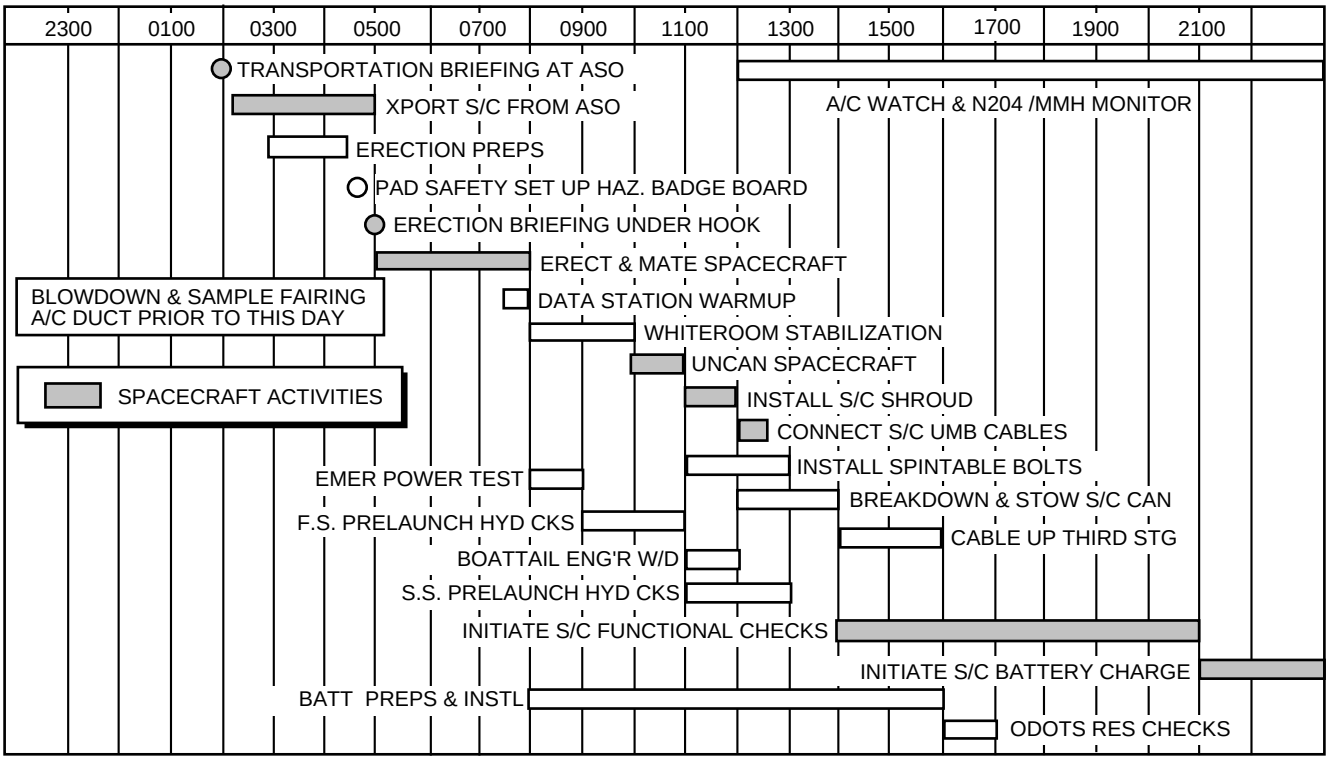

Figure 6-36. Typical Spacecraft Erection (F-7 Day)

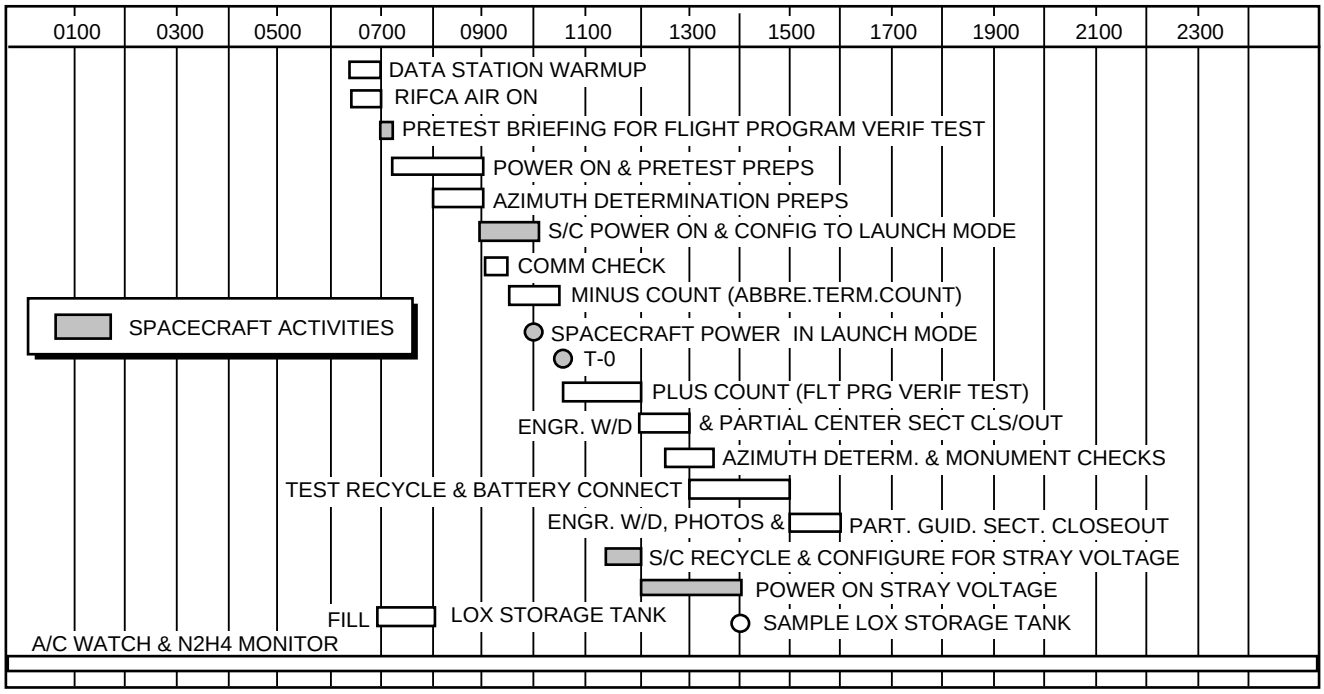

Figure 6-37. Typical Flight Program Verification and Stray Voltage Checks (F-6 Day)

H54574

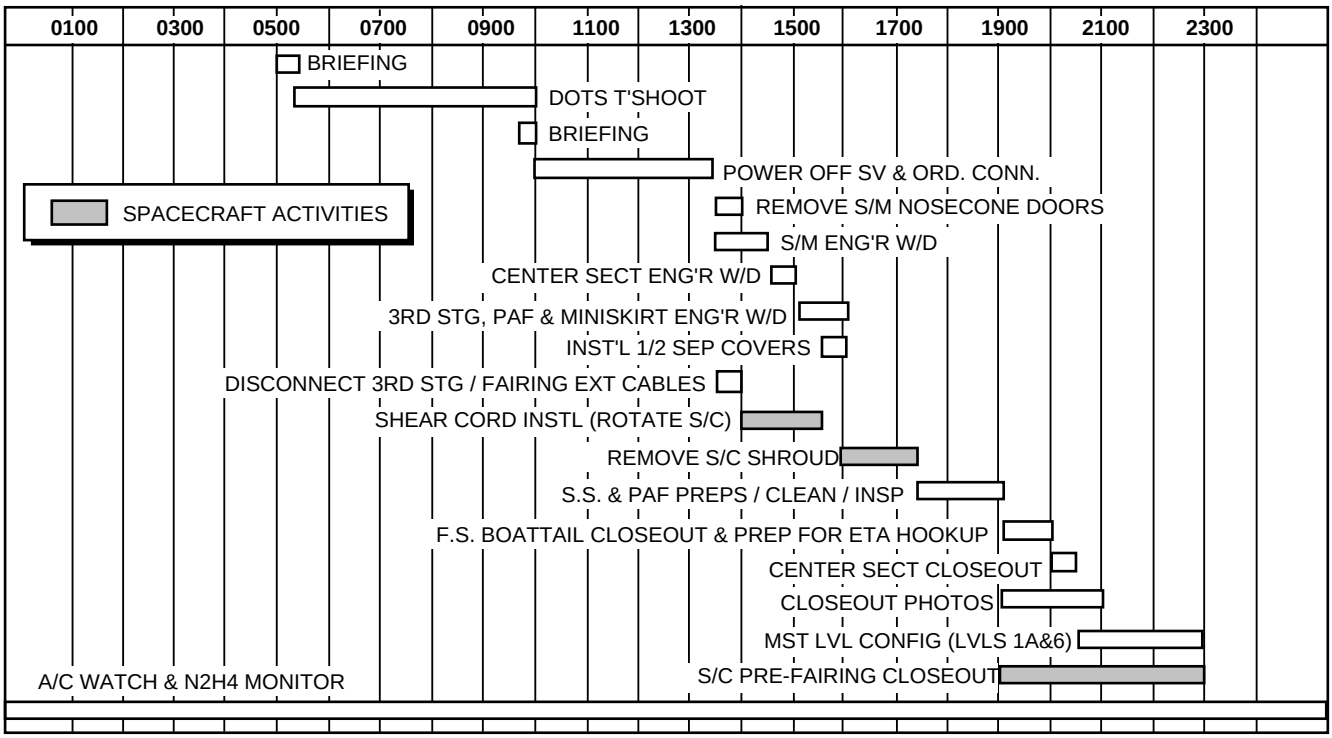

Figure 6-38. Typical Ordnance Installation and Hookup (F-5 Day)

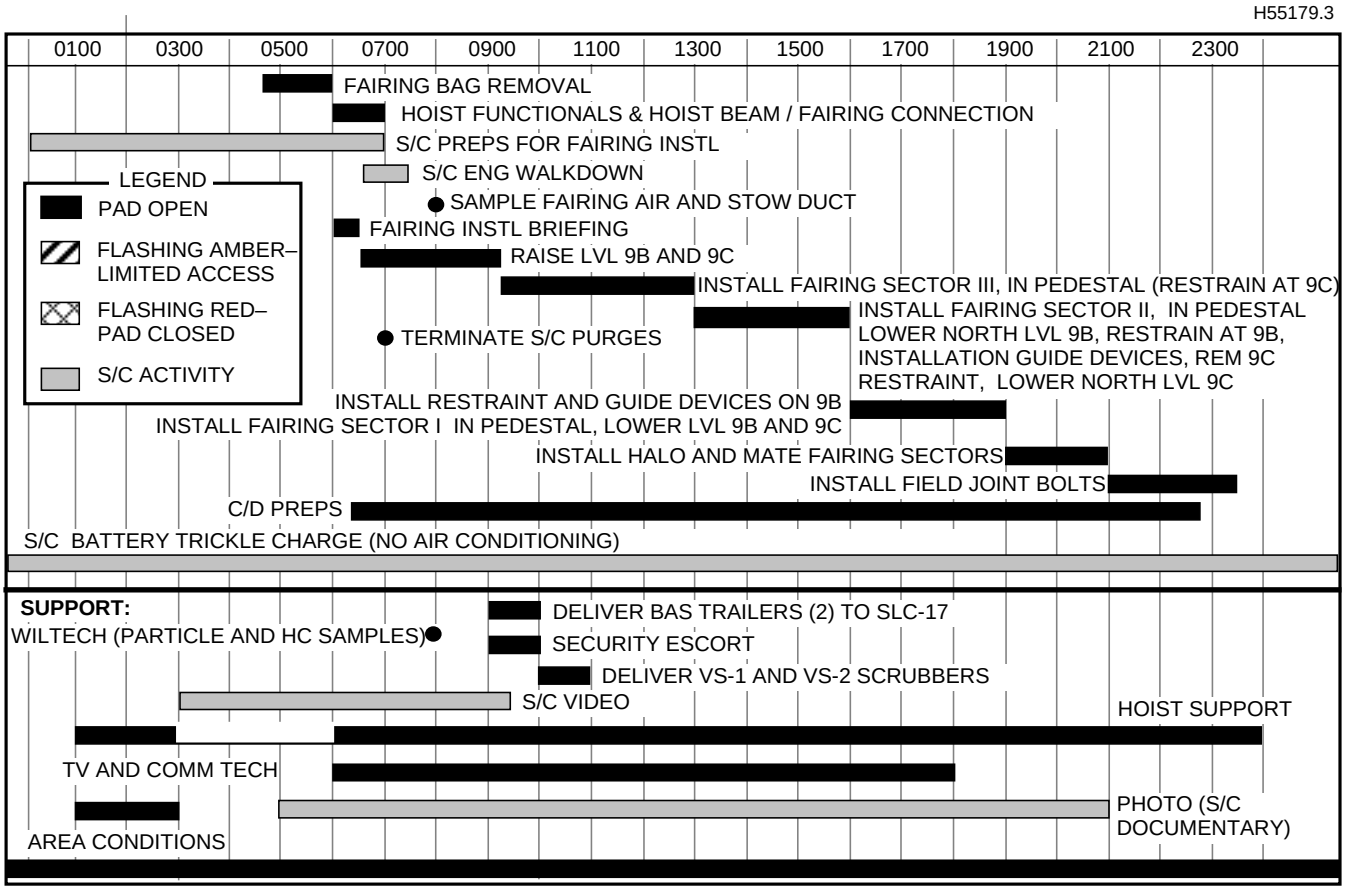

Figure 6-39. Typical Fairing Installation (F-4 Day)

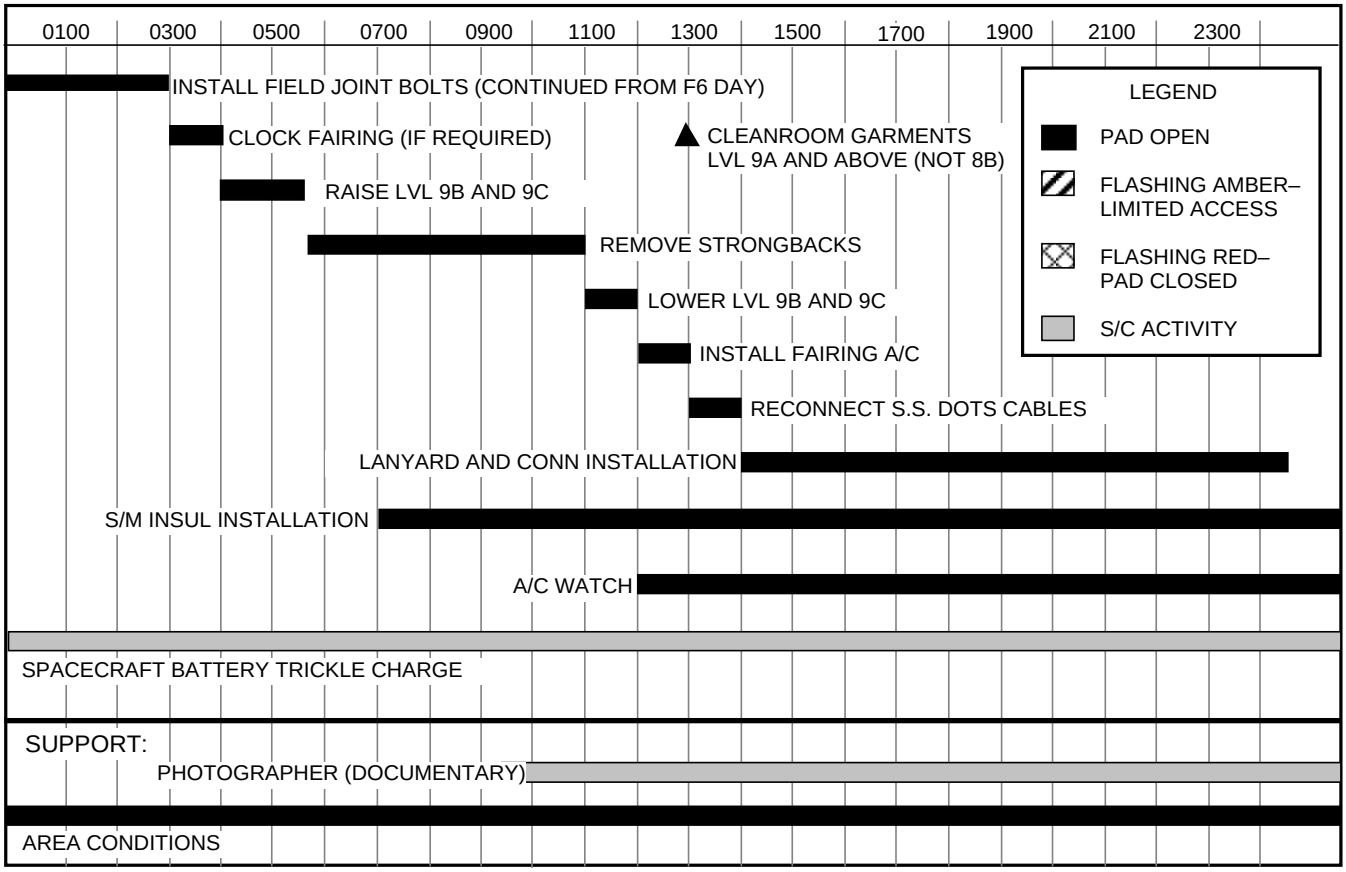

Figure 6-40. Typical Fairing Installation (F-4 Day)

H54576

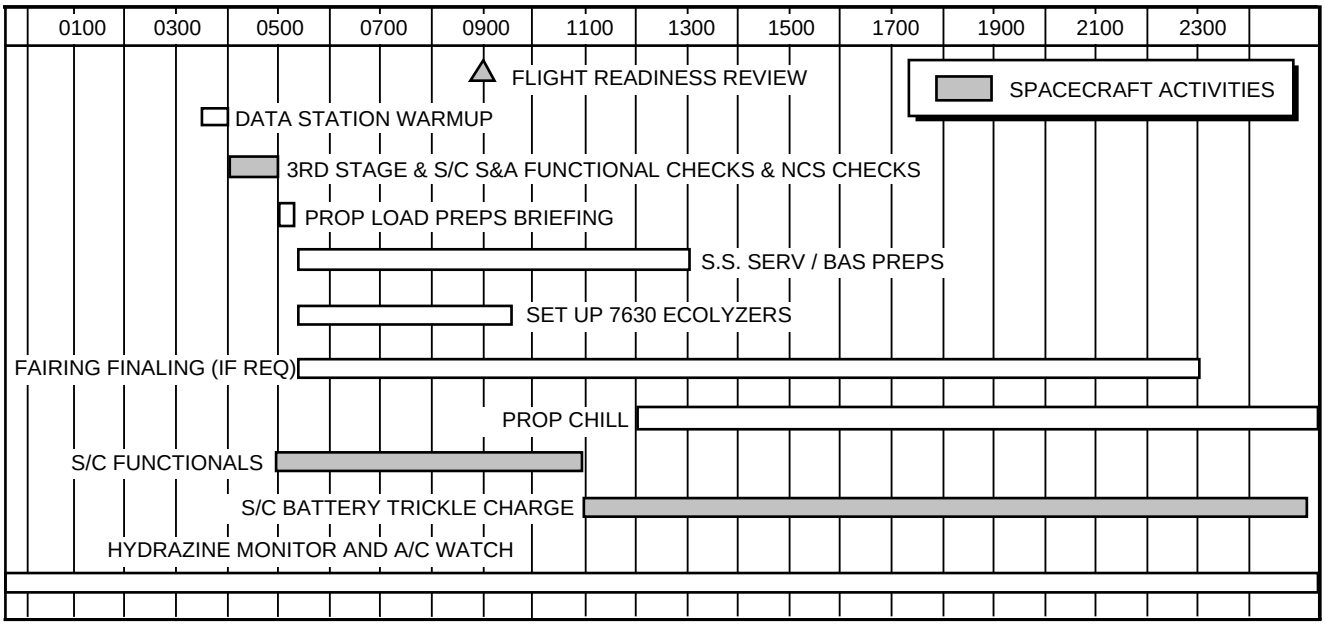

Figure 6-41. Typical Propellant Loading Preparations (F-3 Day)

H54577

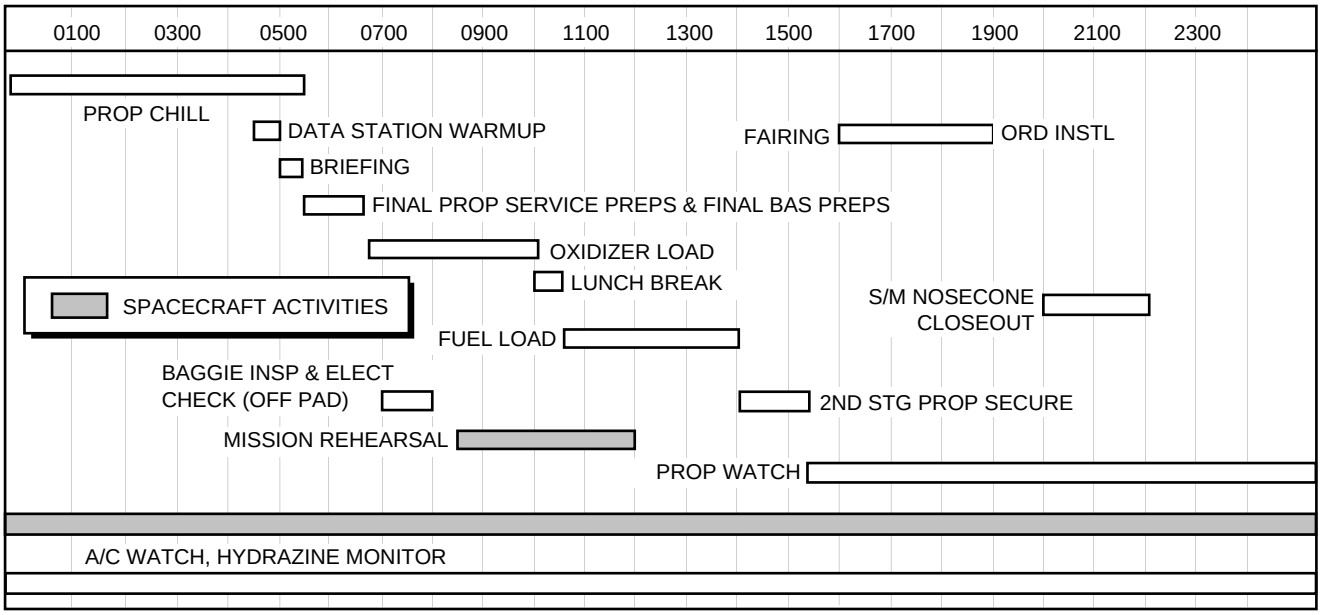

Figure 6-42. Typical Second-Stage Propellant Loading (F-2 Day)

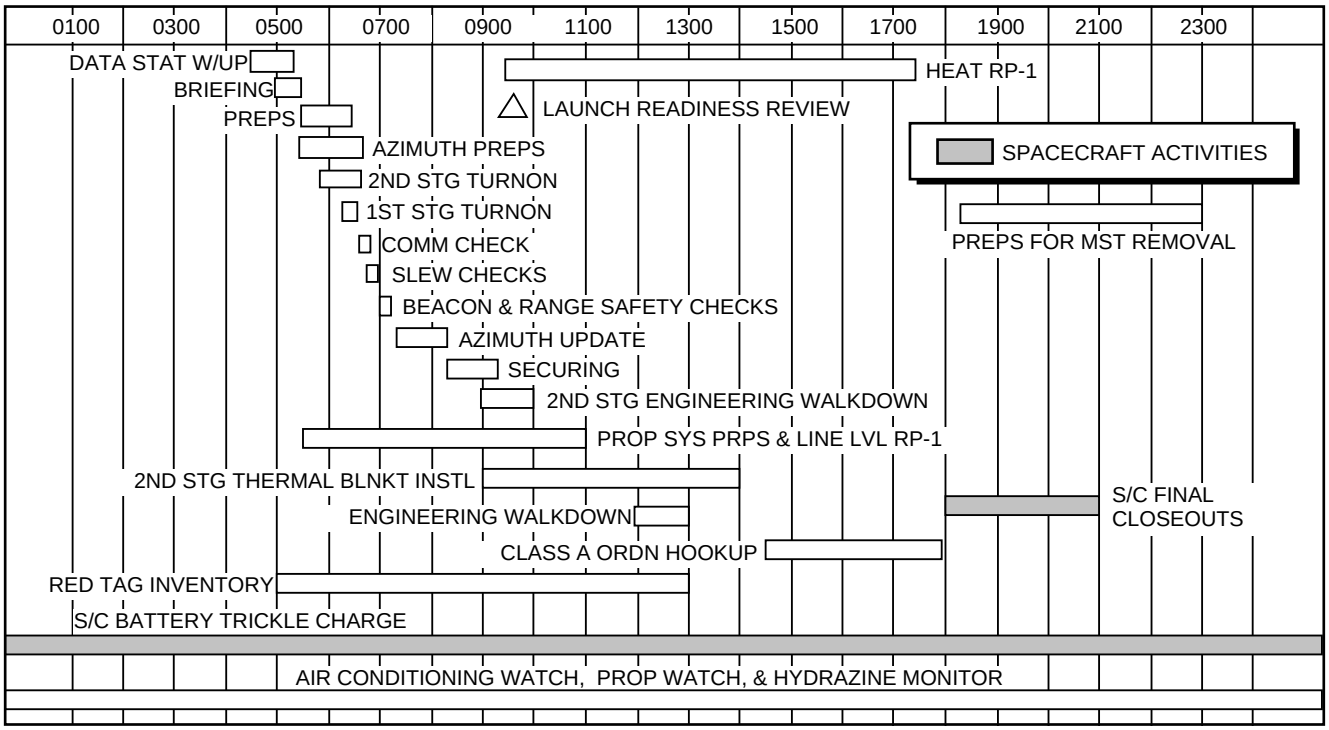

Figure 6-43. Typical Beacon, Range Safety, and Class A Ordnance (F-1 Day)

H54702.1

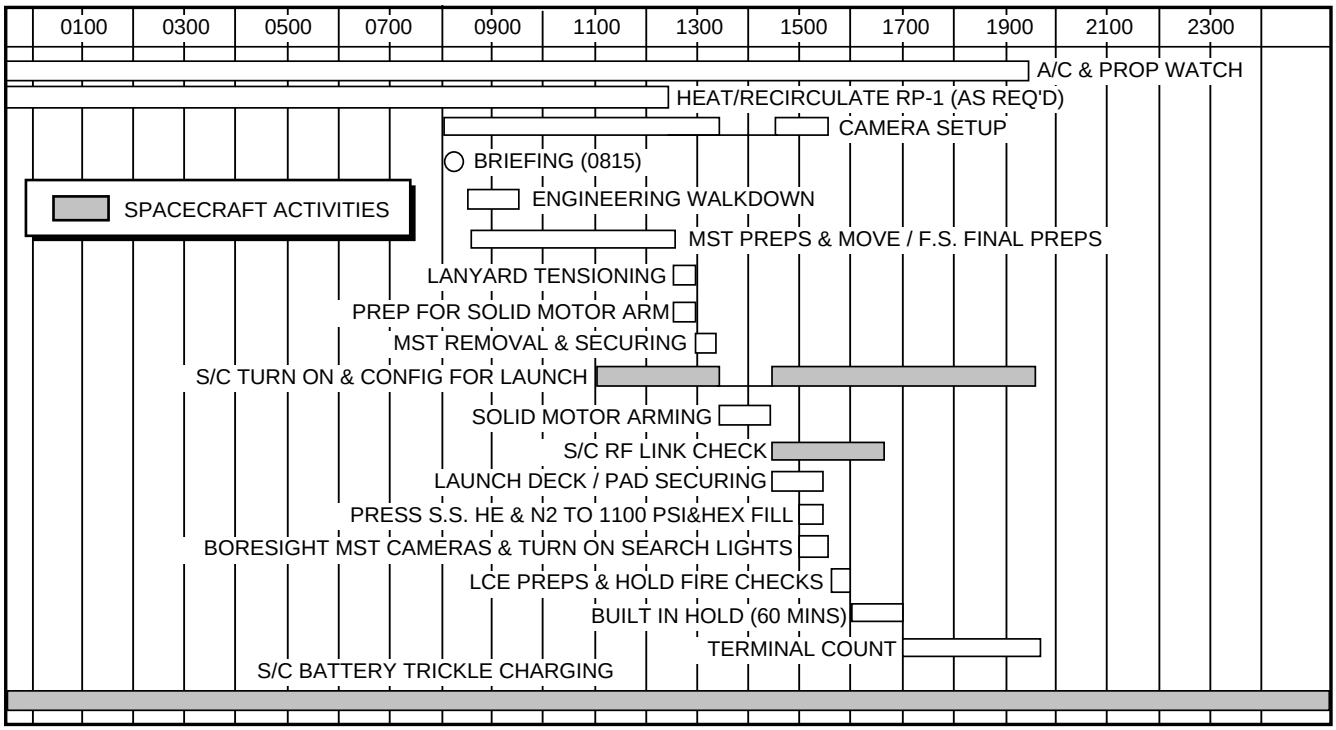

Figure 6-44. Typical Delta Countdown (F-0 Day)

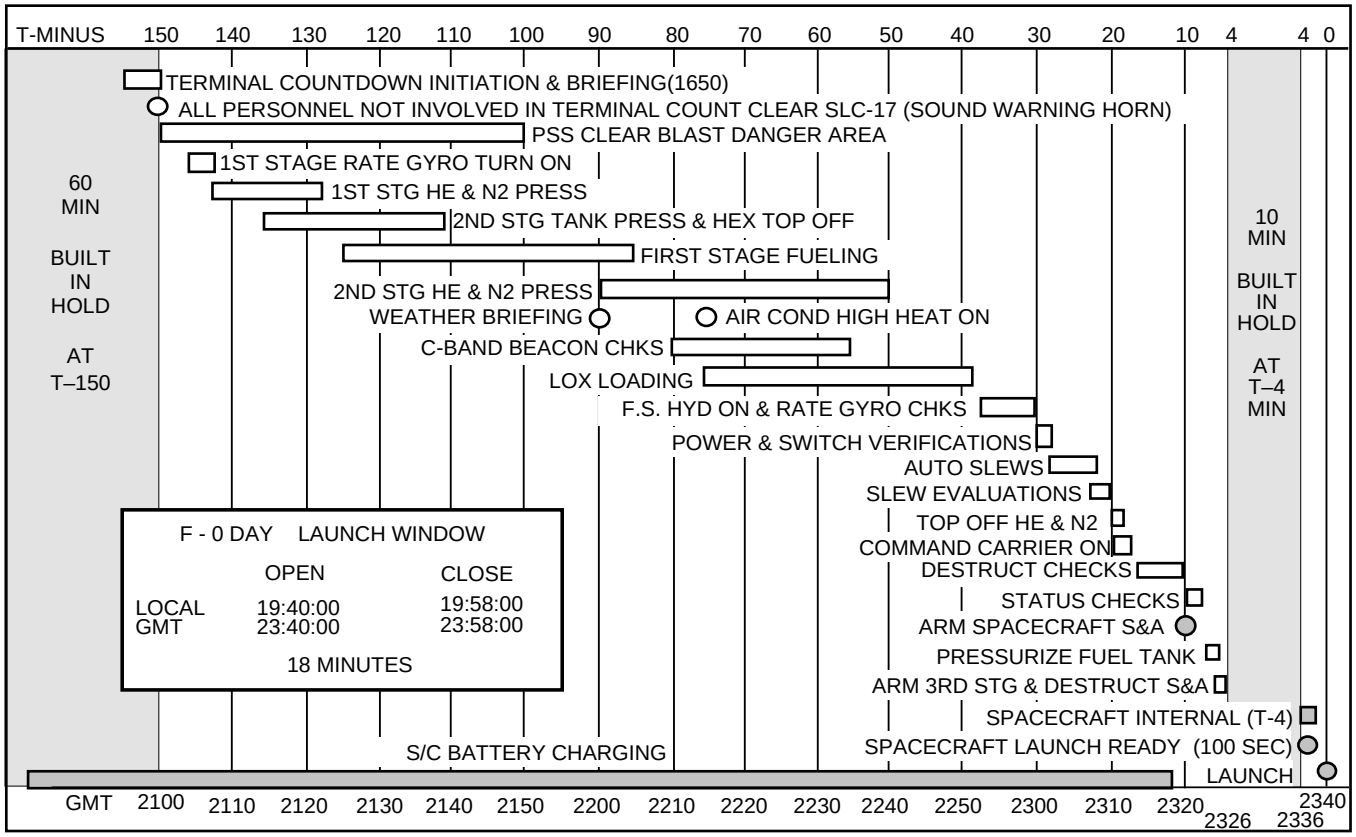

Figure 6-45. Typical Terminal Countdown (F-0 Day)

(F-) workdays. Saturdays, Sundays, and holidays are not scheduled workdays and therefore, are not F-days. The F-days, from spacecraft mate through launch, are coordinated with each spacecraft agency to optimize on-pad testing. All operations are formally conducted and controlled using launch countdown documents. The schedule of spacecraft activities during that time is controlled by the MDA Launch Operations Manager. Tasks involving the spacecraft or tasks requiring that spacecraft personnel be present are shaded for easy identification.

Preparation for a typical three-stage mission from CCAS is as follows; spacecraft and third stage checkout are completed before F-11 day.

F-11 Tasks include equipment verification, precision weighing of spacecraft, and securing.

F-10 Spacecraft is lifted and mated to the third stage; clampband is installed, and initial clampband tension is established.

F-9 Final preparations are made prior to can-up for both spacecraft and third stage, and spacecraft/third stage interface verification is done, if required.

F-8 The payload handling can is assembled around the spacecraft/third stage; handling can transportation covers are installed; the can is placed on its trailer; and the handling can purge is set up.

F-7 Tasks include transportation to the launch site, erection, and mating of the spacecraft/upper stage to the Delta II second stage in the MST cleanroom. Preparations are made for the launch vehicle flight program verification test.

F-6 The launch vehicle flight program verification test is performed, followed by the vehicle

power-on stray voltage test. Spacecraft systems to be powered at liftoff are turned on during the flight program verification test, and all data are monitored for electromagnetic interference (EMI) and radio frequency interference (RFI). Spacecraft systems to be turned on at any time between F-5 day and spacecraft separation are turned on in support of the vehicle power-on stray voltage test. Spacecraft support of these two vehicle system tests is critical to meet the scheduled launch date.

F-5 The Delta II vehicle ordnance installation/connection, preparation for fairing installation, and spacecraft closeout operations are performed.

F-4, 3 Spacecraft final preparations prior to fairing installation include Delta II upper stage closeout, preparations for second stage propellant servicing, and fairing installation.

F-2 Second stage propellant is loaded.

F-1 Tasks include C-band beacon readout, and azimuth update, followed by the vehicle Class A ordnance connection, spacecraft ordnance arming, and final fairing preparations for MST removal, second-stage engine section closeout, and launch vehicle final preparations.

F-0 Launch day preparations include gantry removal, final arming, terminal sequences, and launch. Spacecraft should be in launch configuration immediately prior to T-4 minutes and standing by for liftoff. The nominal hold and recycle point is T-4 minutes.

6.6.3 Launch Vehicle Schedules

One set of facility-oriented three-week schedules is developed, on a daily timeline, to show processing of multiple launch vehicles through each facility; i.e., for both launch pads, DMCO, Hangar M, solid motor area, and each of the three PPFs as required. These schedules are revised daily and reviewed at the twice-weekly Delta Status Meetings. Another set of launch vehicle-specific schedules are generated, on a daily timeline, which covers a two- or three-month period to show the complete processing of each launch vehicle component. An individual schedule is made for DMCO, third-stage HPF, and launch pad.

6.6.4 Spacecraft Schedules

The spacecraft project team will supply schedules to the MDA spacecraft coordinator who will arrange support as required.

6.7 DELTA II MEETINGS AND REVIEWS

During launch preparation, various meetings and reviews take place. Some of these will require spacecraft customer input while others allow the customer to monitor the progress of the overall mission. The MDA spacecraft coordinator will ensure adequate spacecraft user participation.

6.7.1 Meetings

Delta Status Meetings. Status meetings are generally held twice a week at SLC-17. These meetings include a review of the activities scheduled and accomplished since the last meeting, a discussion of problems and their solutions, and a general review of the mission schedule and specific mission schedules. Spacecraft user representatives are encouraged to attend these meetings.

Daily Schedule Meetings. Daily schedule meetings are held in the SLC-17 conference room to provide the team members with their assignments and to summarize the previous or current day's accomplishments. These meetings are attended by the launch conductor, technicians, inspectors, engineers, supervisors, and the spacecraft coordinator. Depending upon testing activities, these meetings are held at either the beginning or the end of the first shift.

6.7.2 Prelaunch Review Process

Periodic reviews are held to ensure that the spacecraft and launch vehicle are ready for launch. The Mission Plan (Figure 6-31) shows the relationship of the review to the program assembly and test flow.

The following paragraphs discuss the Delta II readiness reviews.

Postproduction Review. This meeting, conducted at Pueblo, Colorado, reviews the flight hardware at the end of production and prior to shipment to CCAS.

Mission Analysis Review. This review is held at Huntington Beach, California, approximately three months prior to launch, to review mission specific drawings, studies, and analyses.

Pre-Vehicle-On-Stand (Pre-VOS) Review. This review is held at Huntington Beach subsequent to the completion of Delta mission checkout (DMCO), and prior to erection of the vehicle on the launch pad. It includes an update of the activities since the post-production review at Pueblo, the results of the DMCO processing, and any hardware history changes.

Launch Site Readiness Review (LSRR). This review is held prior to erection and mate of the upper stage and spacecraft. It includes an update of the activities since the pre-VOS review and verifies the readiness of the launch vehicle, third stage, launch facilities, and spacecraft for transfer of the spacecraft to the pad.

Flight Readiness Review (FRR). This review is an update of actuals since the Pre-VOS and is conducted to determine that checkout has shown that the launch vehicle and spacecraft are ready for countdown and launch. Upon completion of this meeting, authorization to proceed with the loading of second stage propellants is given. This review also assesses the readiness of the range to support launch and provides a predicted weather status.

Launch Readiness Review (LRR). This review is held on L-1 day and all agencies and contractors are required to provide a ready-to-launch statement. Upon completion of this meeting, an okay to enter terminal countdown is given.

Section 7
LAUNCH OPERATIONS AT WESTERN RANGE

This section presents a description of Delta Launch Vehicle Operations associated with Space Launch Complex 2 (SLC-2) at Vandenberg Air Force Base, California. Prelaunch processing of the Delta II is presented, as well as a discussion of spacecraft processing and operations that are conducted prior to launch day.

7.1 ORGANIZATIONS

As operator of the Delta launch system, MDA maintains an operations team at VAFB that provides launch services to NASA, commercial, and USAF customers. This team is augmented by MDA personnel from the Delta launch operations team from Space Launch Complex 17 at Cape Canaveral Air Station, Florida. MDA provides the interface to the DOT for licensing and certification to launch commercial spacecraft using the Delta II.

NASA is responsible for the SLC-2 launch facilities at VAFB and operates spacecraft processing facilities at VAFB that are used in support of Delta missions. The MDA interface with NASA at VAFB is through the VAFB KSC resident office. The interface with NASA at KSC Florida is through the Program Management and Operations Directorate. NASA designates a Launch Site Support Manager (LSSM) who arranges all the support requested from NASA for a launch from VAFB. MDA has established an interface with the 30th Space Wing Directorate of Plans; the Western Range has designated a Range Program Support Manager (PSM) to be a representative of the 30th Space Wing. The PSM serves as the official interface for all support and services requested. These services include range instrumentation, facilities/equipment operation and maintenance, safety, security, and logistics support. Requirements satisfied by NASA and/or USAF are described in the government's Universal Document System (UDS) format. MDA and the spacecraft agency generate the Program Requirements Document (PRD). Formal submittal of these documents to the government agencies is arranged by MDA.

For commercial launches, MDA makes all the arrangements for the payload processing facilities and services. The organizations that support a launch from VAFB are shown in Figure 7-1. A spacecraft coordinator from the MDA-VAFB launch team is assigned to each mission to assist the spacecraft team during the launch campaign by arranging for support of the spacecraft, assisting in obtaining safety approval of the spacecraft test procedures and operations, integrating the spacecraft operations into the launch vehicle operations, and, during the countdown and launch, serving as the interface between the spacecraft and test conductor in the blockhouse.

7.2 FACILITIES

In addition to those facilities required for Delta II launch vehicle processing, specialized facilities are provided for checkout and preparation of the spacecraft. Laboratories, cleanrooms, receiving and shipping areas, hazardous operations areas, offices, etc., are provided for spacecraft project personnel.

A map of VAFB is shown in Figure 7-2.

The commonly used facilities at the western launch site for NASA or commercial spacecraft are the following:

A. Spacecraft payload processing facilities (PPF):

1. NASA-provided building: 836.
2. Astrotech Space Operations: 1032.
3. California Commercial Spaceport, Inc.: Building 375

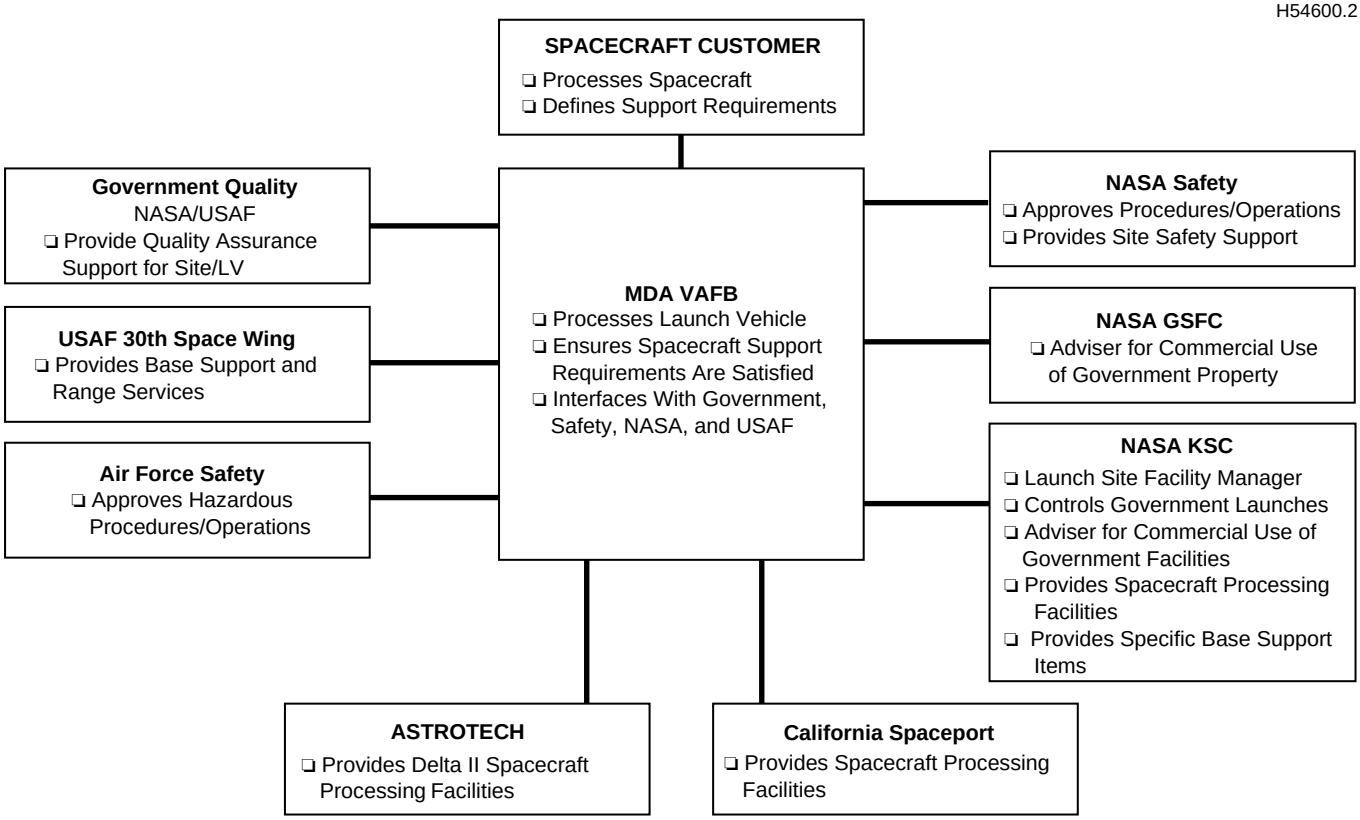

Figure 7-1. Launch Base Organization at VAFB for Commercial Launches

B. Hazardous processing facilities (HPF):

1. NASA-provided building: 1610.
2. Astrotech Space Operations: 1032.
3. California Commercial Spaceport, Inc.: Building 375

While there are other spacecraft processing facilities located on VAFB that are under USAF control, commercial spacecraft will normally be processed through the commercial facilities of Astrotech Space Operations or the California Spaceport. Government facilities for spacecraft processing (USAF or NASA) can be used for commercial spacecraft use only under special circumstances (use requires negotiations between MDA, the spacecraft agency and the USAF or NASA). The spacecraft agency must provide its own test equipment for spacecraft preparations, including telemetry receivers and telemetry ground stations.

After arrival of the spacecraft and its associated equipment at VAFB by road or by air (via the VAFB airfield), transportation to and from the payload processing facilities and to the launch site will be provided by MDA or NASA, as appropriate. Equipment and personnel are also available for loading and unloading operations. It should be noted that the size of the shipping containers often dictates the type of aircraft used for transportation to the launch site. The aircraft carrier should be consulted for the type of freight unloading equipment that will be required at the western range. Shipping containers and handling fixtures attached to the spacecraft are provided by the spacecraft project.

Shipping and handling of hazardous materials such as EEDs, radioactive sources, etc., must be in accordance with applicable regulations. It is the responsibility of the spacecraft agency to identify these items and become familiar with such regulations. These regulations include those imposed by NASA, USAF, and FAA (refer to Section 9).

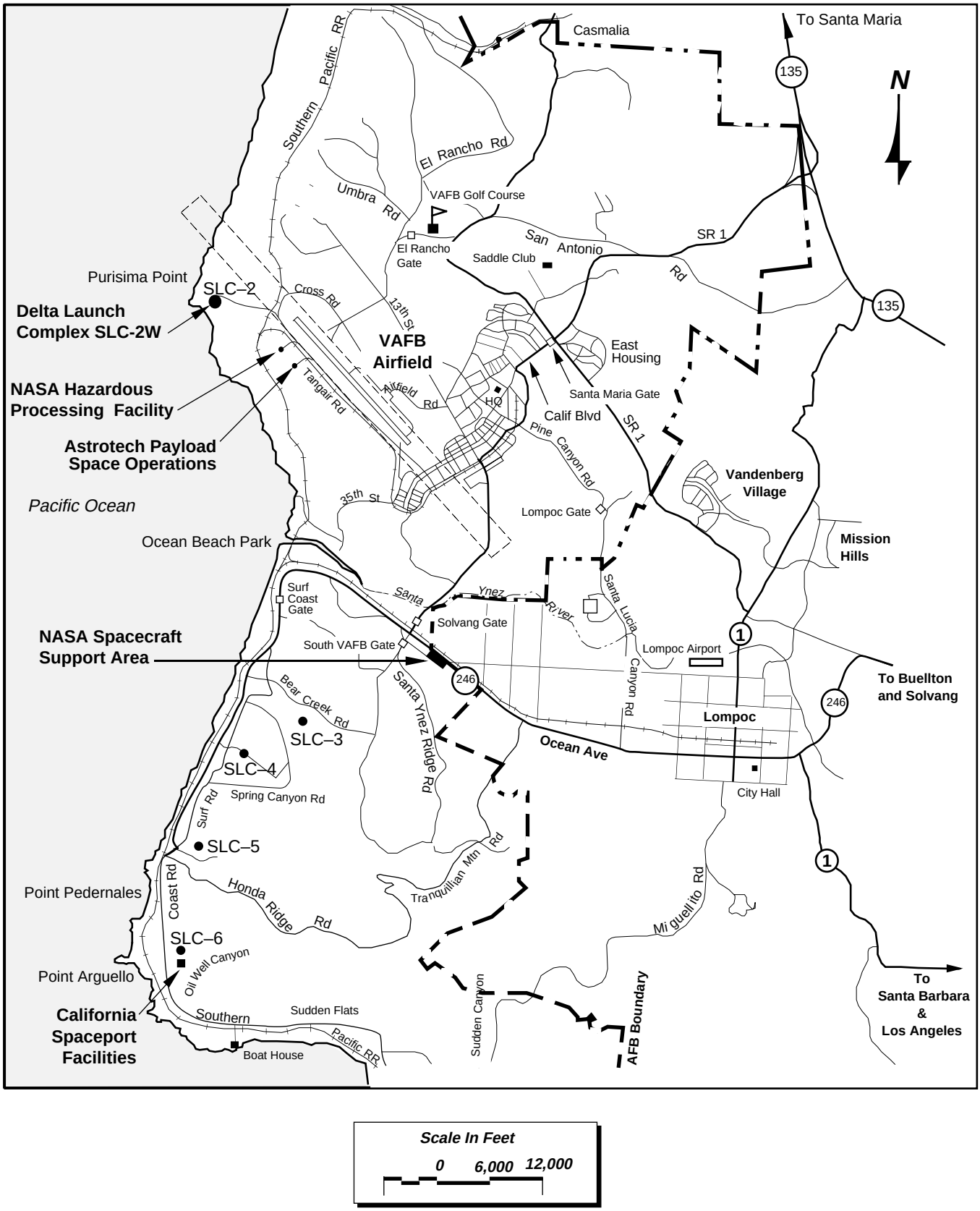

Figure 7-2. Vandenberg Air Force Base

7.2.1 NASA Facilities on South VAFB

The spacecraft facilities are located in the NASA support area on South VAFB (Figure 7-3). The spacecraft support area is adjacent to State Highway 246 on Clark Street and is accessible through the SVAFB South Gate. The support area consists of the spacecraft laboratory (Building 836), NASA technical shops, NASA supply, and NASA engineering and operations building (Building 840).

7.2.1.1 Spacecraft Laboratory. The Spacecraft Laboratory in Building 836 (Figure 7-4) is divided into work and laboratory areas and includes spacecraft assembly areas, laboratory areas, cleanrooms, computer facility, office space, conference room, and the telemetry station.

Spacecraft Laboratory 1 consists of a high bay 20.4 m (67 ft) long, 9.8 m (32 ft) wide, 9.1 m (30 ft) high and an adjoining 334 m^2 (3600-ft^2) support area. Personnel access doors and a sliding door 3.7 by 3.7 m (12 by 12 ft) connect the two portions of this laboratory. The outside cargo entrance door to the spacecraft assembly room in Laboratory 1 is 6.1 m (20 ft) wide by 7.8 m (25 ft, 7 in.) high. A bridge crane, with an 8.8-m (29-ft) hook height and a 4545-kg (5-ton) capacity, is available for handling spacecraft and associated equipment. This assembly room contains a class 100,000 horizontal laminar flow cleanroom, 10.4 m (34 ft) long by 6.6 m (21.5 ft) wide by 7.6 m (25 ft) high with temperature control of 15.6°-26.7°C ± 1.1° (60°-80°F ± 2°). The front of the cleanroom opens to allow free entry of the spacecraft and handling equipment.

The cleanroom has crane access in the front-to-rear direction only; however, the crane cannot operate over the entire length of the laboratory without disassembly because its path is obstructed by the horizontal beam that serves as the cleanroom divider. Spacecraft Laboratory 1 will also support computer, telemetry, and checkout equipment in a separate room containing raised floors and an under-floor power distribution system. This room has an area of approximately 334 m^2 (3600 ft^2). Temperature control in this area is 21.1°C ± 2.8° (70°F ±5°).

Spacecraft Laboratory 2 has a 527 m^2 (5670 ft^2) work area. Access to this area from the high-bay service area is provided by a 3.7-by 5.2-m (12-by 17-ft) roll-up door. There are three electric overhead cranes available: a fixed 909-kg (1-ton) hoist

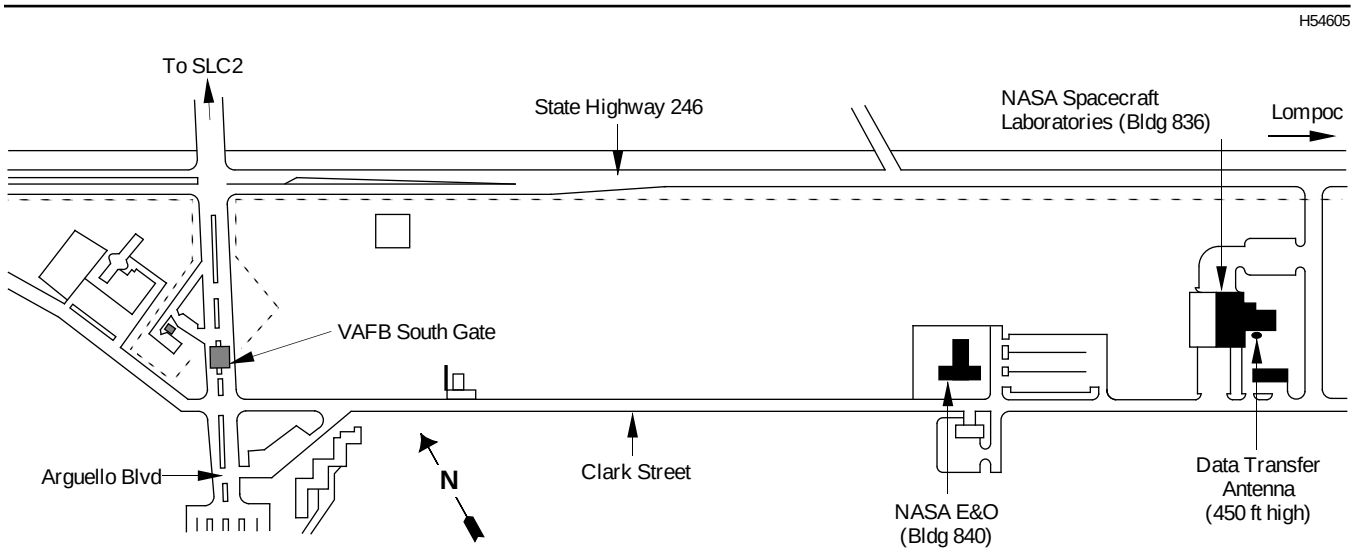

Figure 7-3. Spacecraft Support Area

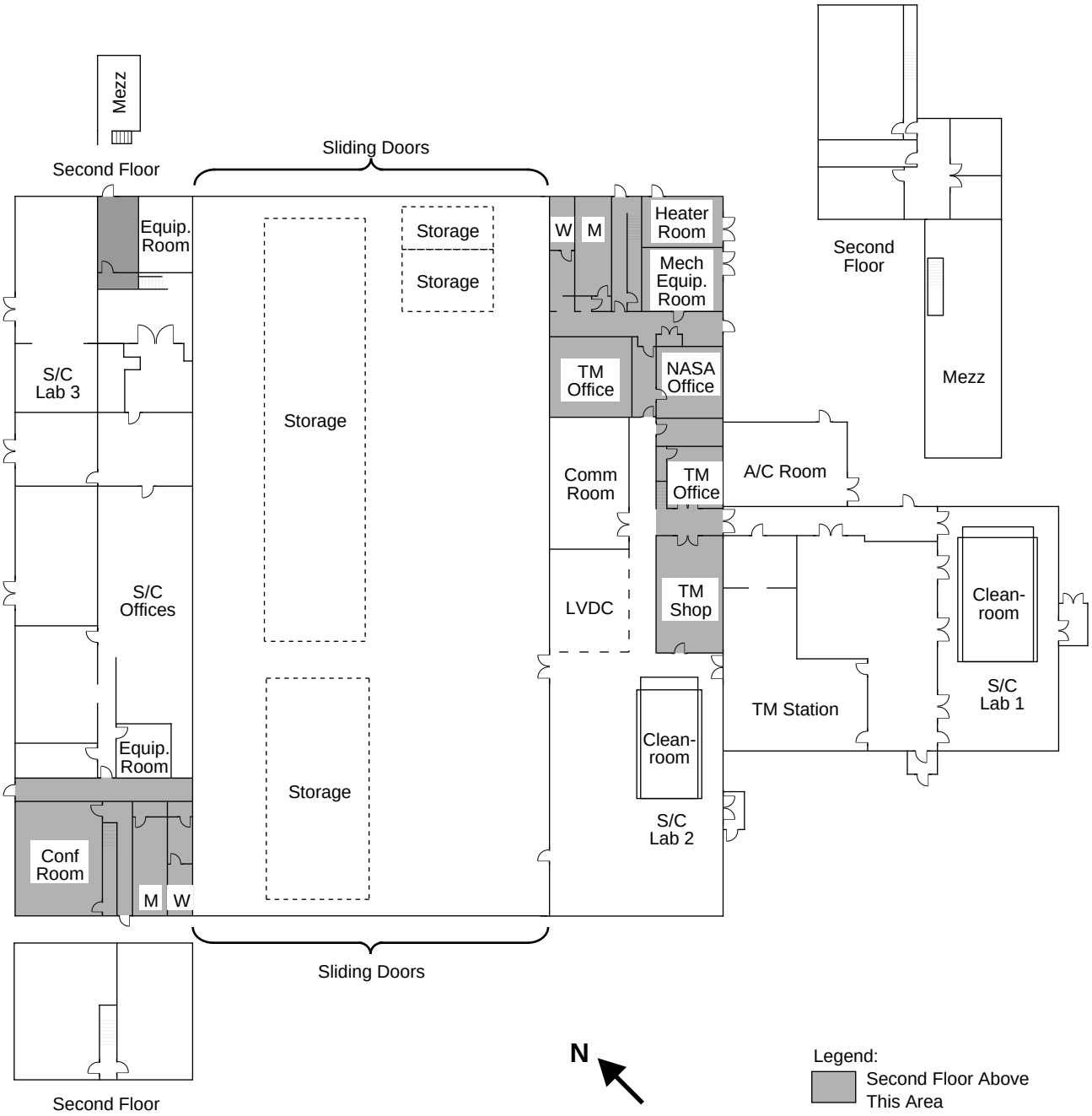

Figure 7-4. Spacecraft Laboratory (Building 836)

with a 7-m (23-ft) hook height, and two 909-kg (1-ton) monorail hoists with 5.5-m (18-ft) hook heights. A horizontal laminar flow Class 100,000 cleanroom, 9.1 by 5.2 by 5.2 m (30 by 17 by 17 ft), is located in this laboratory for spacecraft use. One end of the cleanroom is open to allow access.

Spacecraft laboratory 3 has three work areas with a total of 2323 m^2 (25,000 ft^2). This laboratory is permanently assigned to the NOAA Environmental Monitoring Satellite Program.

The Launch Vehicle Data Center (LVDC) (Figure 7-5) is an area containing 24 consoles for the MDA Delta management and technical support personnel. These positions are manned during countdown and launch to provide technical assistance to the launch team in the SLC-2 blockhouse and to the Mission Director in the MDC in Building 840. These consoles have individually programmed communications panels for specific mission requirements. This provides the LVDC personnel with technical communications to monitor and coordinate both prelaunch and launch activities. Video data display terminals in the LVDC are provided for display of range and launch vehicle technical information.

The high bay is a 30.5- by 61-m (100- by 200-ft) area serviced by a 22,727-kg (25-ton) crane with a 7.6-m (25-ft) hook height. This area is ideal for handling heavy equipment and loading or unloading trucks. The high bay is heated and has 30.5-m (100-ft) wide by 9.1-m (30-ft) high sliding doors on both ends.

7.2.1.2 NASA Engineering and Operations Facility. The NASA Engineering and Operations facility in Building 840 (Figure 7-6) is located on SVAFB at the corner of Clark and Scarpino Streets.

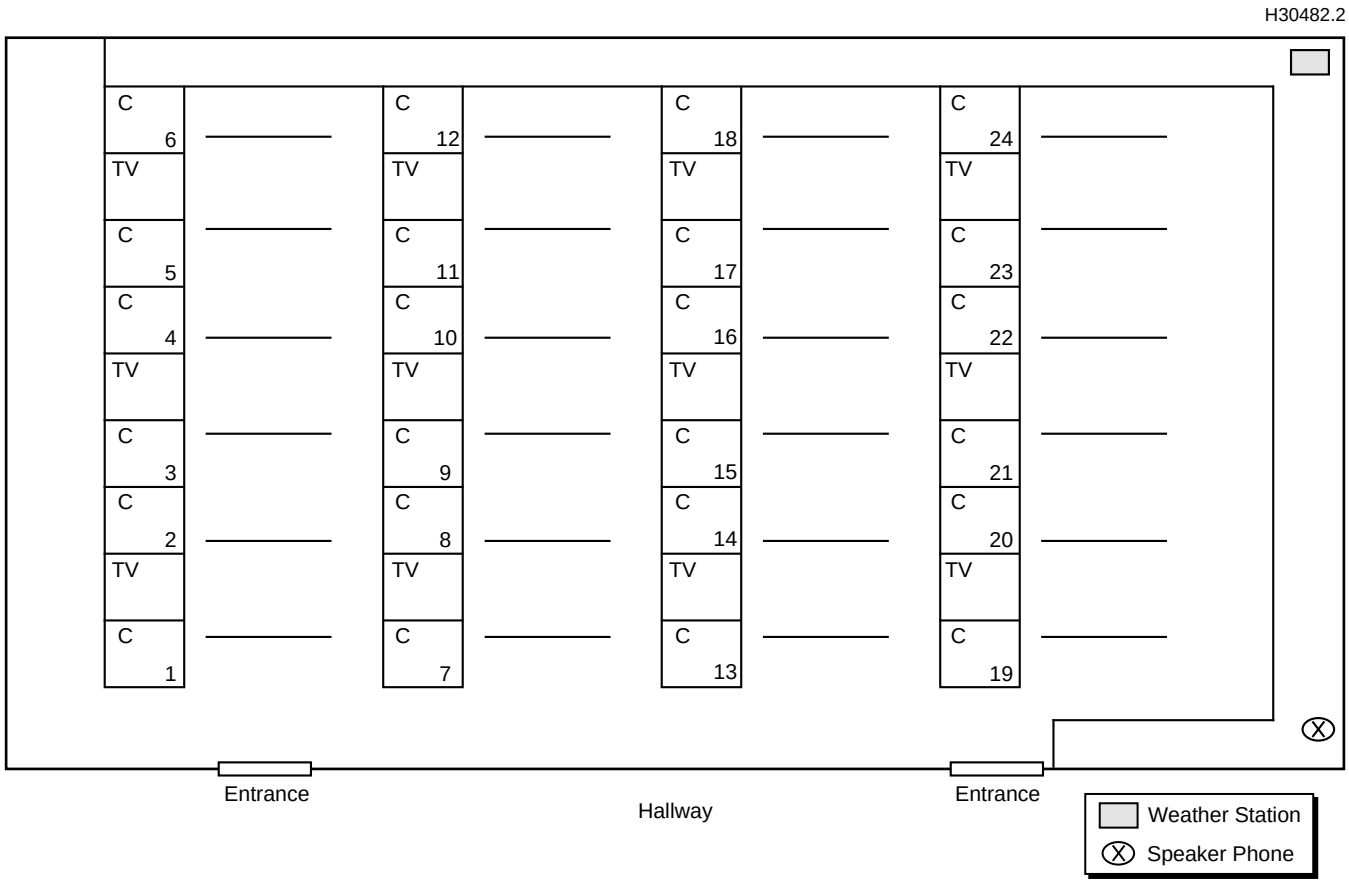

Figure 7-5. Launch Vehicle Data Center, Building 836, Vandenberg AFB

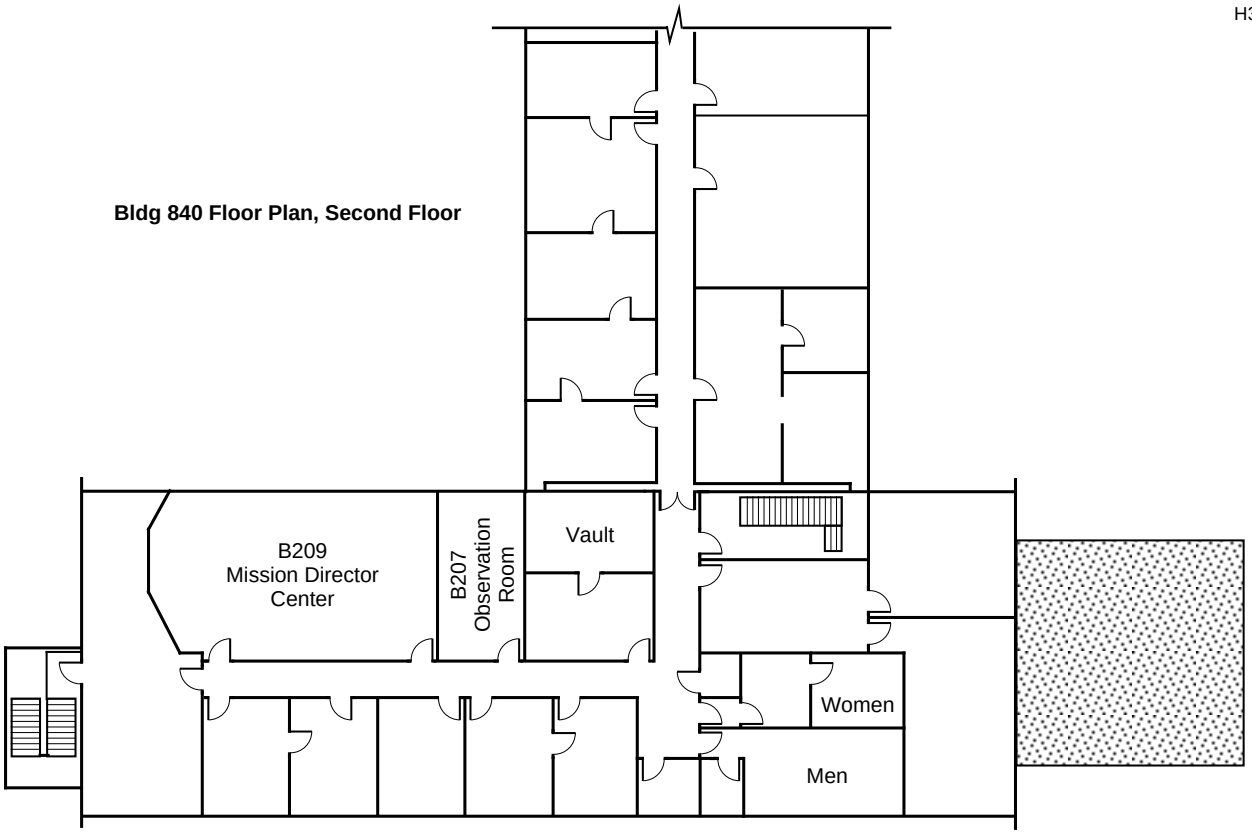

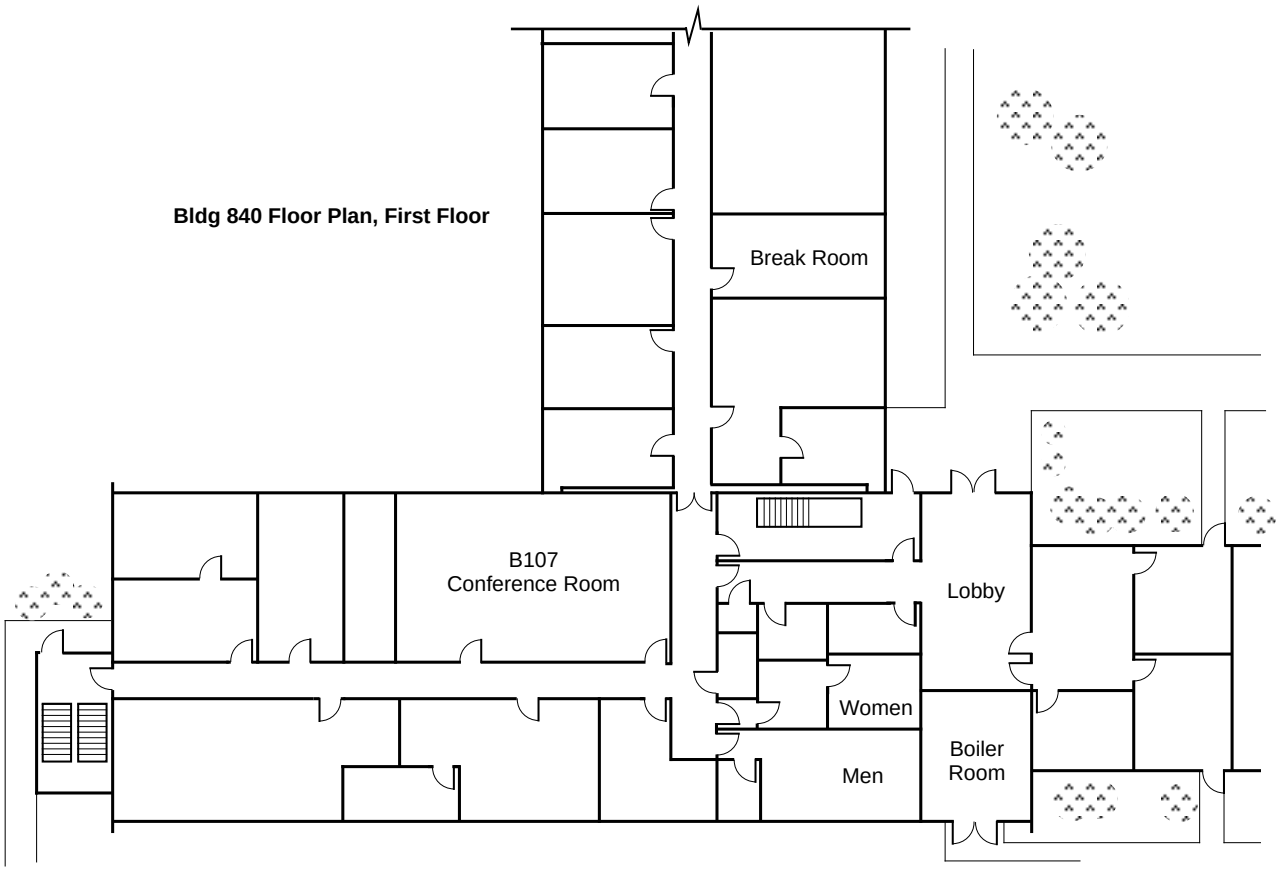

Figure 7-6. NASA Building 840

It contains the NASA offices, NASA contractor offices, Mission Director Center, Observation Room, conference room, and other office space.

The Mission Director Center (Figure 7-7) provides 24 communication consoles for use by the mission director, spacecraft and launch vehicle representatives, experimenters, display controller, and communications operators. These consoles have individually programmed communications for specific mission requirements. This provides the MDA personnel with technical communications to monitor and coordinate both prelaunch and postlaunch activities.

Video data display terminals in the MDC are provided for display of range and vehicle technical information. A Readiness Board and a Events Display Board provide range and launch vehicle/spacecraft status during countdown and launch operations. Two closed-circuit TV display monitors provide display of preselected launch activities.

An Observation Room, separated from the MDC by a glass partition, is used for authorized visitors. Speakers in the room monitor the communication channels used during the launch.

7.2.2 NASA Facilities on North Vandenberg

The NASA Hazardous Processing Facility (Building 1610) is located approximately 3.2 km (2 miles) east of SLC-2 and adjacent to Tangair Road (Figure 7-8). This facility (Figure 7-9) provides capabilities for the dynamic balancing of spacecraft, solid motors, and combinations thereof. It is also used for fairing processing, solid-motor buildup, spacecraft buildup, mating of spacecraft and solid motors, ordnance installation, and loading of hazardous propellants. It houses the Schenk Treble dynamic

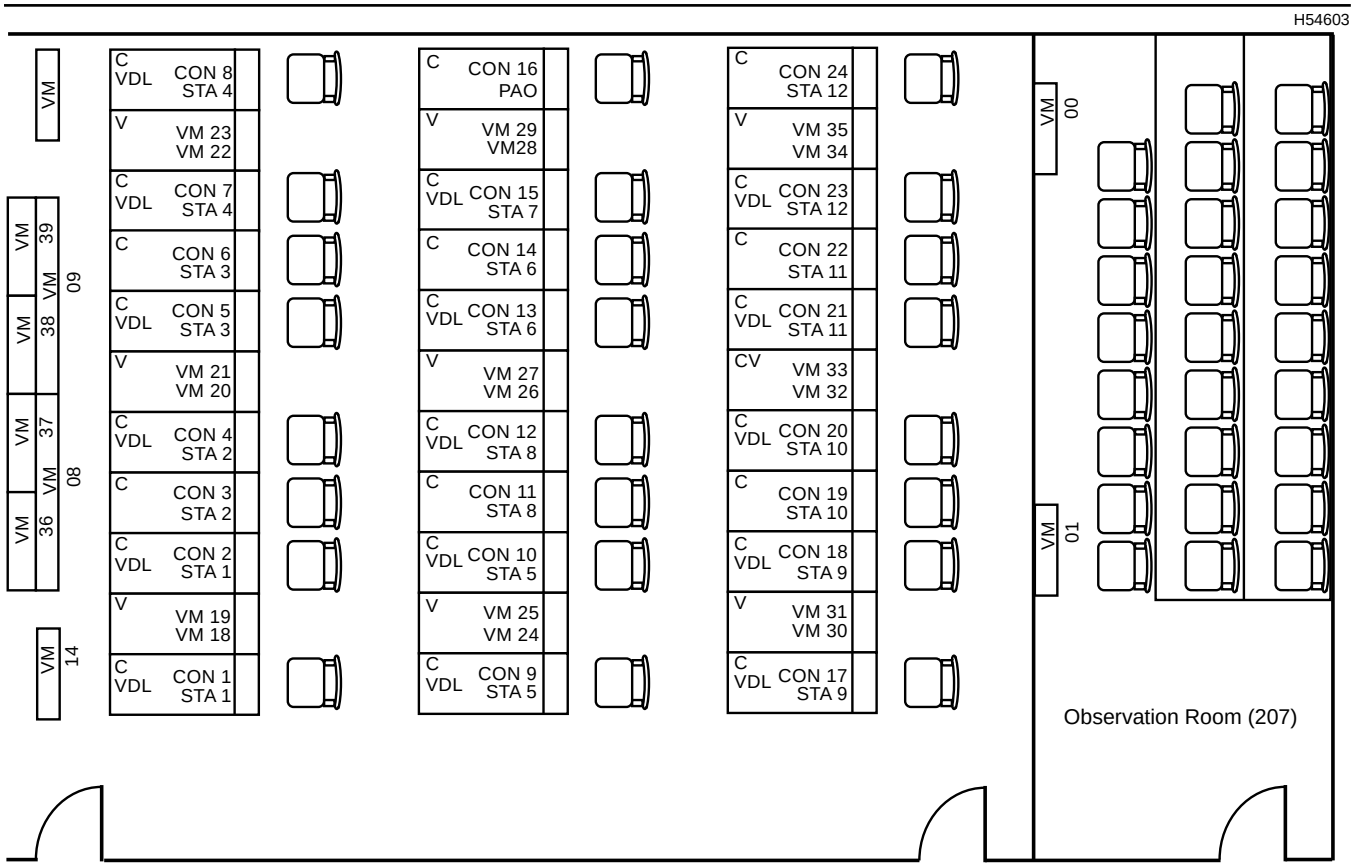

Figure 7-7. Mission Director Center—Building 840

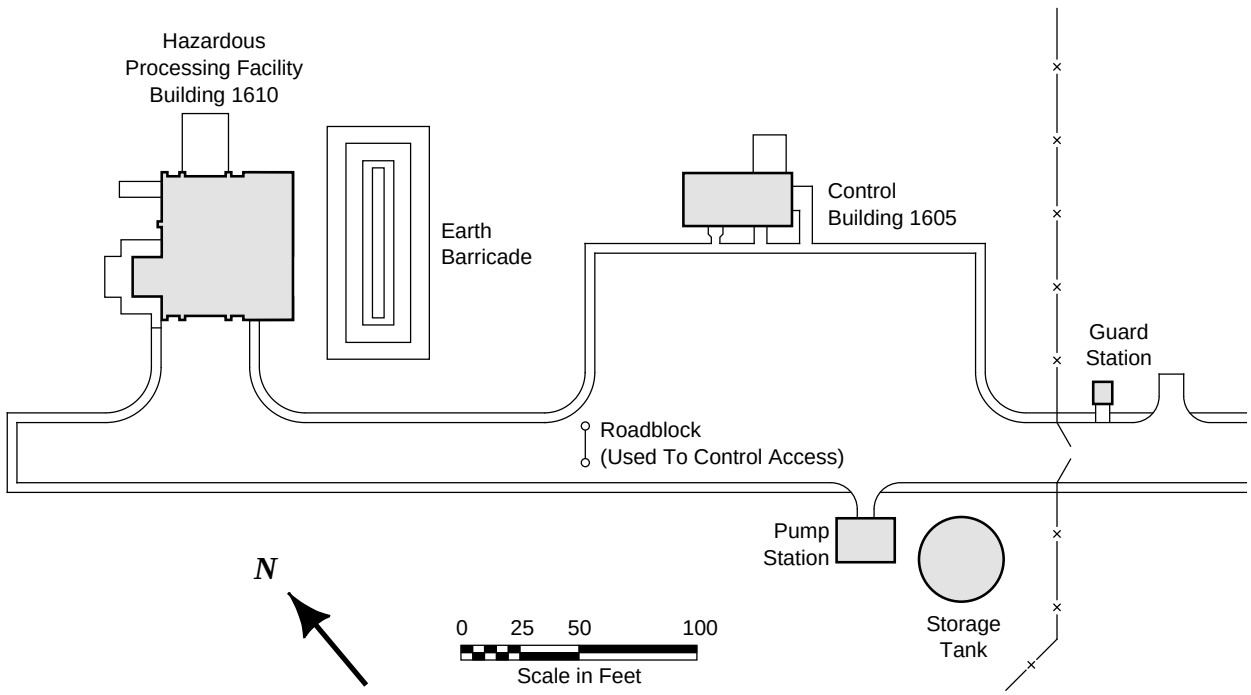

Figure 7-8. Hazardous Processing Facility

balancing machine and equipment for buildup, alignment, and balancing of the upper stage solid propellant motors and spacecraft. Composite spin balancing of the spacecraft/third stage combination is not required. Facilities consist of the Hazardous Processing Facility (Bldg 1610), Control Room (Bldg 1605), guard station, and fire pumping station. Hazardous operations are conducted in the Spin Test Building, which is separated from the Control Room by an earth revetment 4.6 m (15 ft) high. The two buildings are 47.2 m (155 ft) apart.

7.2.2.1 Hazardous Processing Facility. The Hazardous Processing Facility (Figure 7-9) is an approved ordnance-handling facility and was constructed for dynamic balancing of spacecraft and solid rocket motors. It is 17.7 m (58 ft) long, 10.4 m (34 ft) wide, and 13.7 m (45 ft) high with personnel access doors and a flight equipment entrance door opening 5.2 m (17 ft) wide and 9.1 m (29 ft 9 in.) high. The facility is equipped for safe handling of the hydrazine-type propellants used on many space vehicles for attitude control and supplemental propulsion. In the high bay, there is an overhead bridge crane with two 4545-kg (5- ton) capacity hoists. The working hook height is 10.7 m (35 ft). A spreader beam is available which allows use of both 5-ton hoists to lift up to 10 tons. This beam reduces the available hook height by 3 ft 2 in. The Schenck Treble spin balancing machine is in a pit in the floor of Building 1610 with the machines mating at surface level with the floor. The facility is a Class 100,000 clean facility with positive pressure maintained in the room to minimize contamination from the exterior atmosphere. The positive-pressure clean air is provided by the air circulation and conditioning systems located in a covered environmental equipment room at the rear of the building. Person-

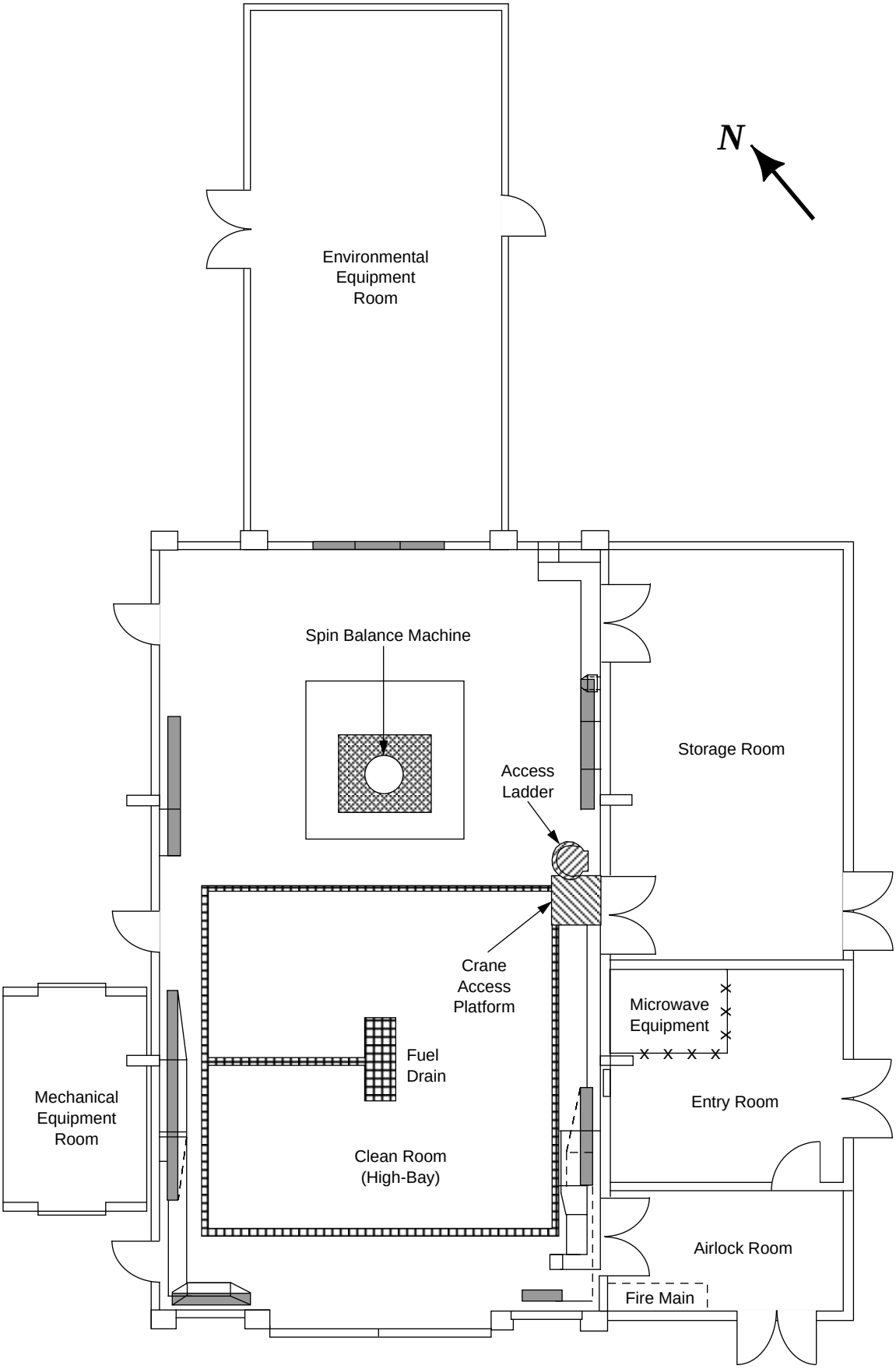

Figure 7-9. Spin Test Building (Building 1610)

nel gaining entry to the cleanroom from the entry room must wear appropriate apparel and must pass through an airlock. The airlock room has an access door to the exterior so that equipment can be moved into the cleanroom.

7.2.2.2 Control Room Building. The Control Room Building (Figure 7-10) contains a control room, an operations ready room, a fabrication room, and a mechanical/electrical room. The control console for the dynamic balancing system is located within the control room. Television monitors and a two-way intercommunications system provide continuous audio and visual monitoring of operations in the Spin Test Building.

7.2.3 Astrotech Space Operations Facilities

The Astrotech facility is located on 24.3 hectares (60 acres) of land at Vandenberg AFB approximately 3.7 km (2 mi) south of the Delta II launch complex (SLC-2) along Tangair Road at Red Road (Figures 7-2 and 7-11). The initial phase of this facility includes approximately 1,000 m^2 (10,600 ft^2) of industrial space. With completion of the Phase II expansion in 1996, this facility will include an additional approximately 500 m^2 (5,400 ft^2) of industrial space.

With Phase II completion there will be three major buildings on the site, as shown in Figure 7-11.

A brief description of each building is given below. For further details a copy of the Astrotech Facility Accommodation Handbook is available.

Building 1032, the Payload Processing Facility, houses two explosion-proof high bays and an explosion-proof air lock/high bay for non hazardous and hazardous operations, and is used for final assembly and checkout of the spacecraft, liquid propellant and solid rocket motor handling operations, third-stage preparations, and payload final assembly. The Astrotech facility will be on the Vandenberg fiber optics network, which will provide basewide communications capability. Antenna towers mounted on the building offer the option for line-of-sight RF communication with SLC-2.

Building M1030, the Technical Support Building, provides administrative facilities for space-

H30476.4

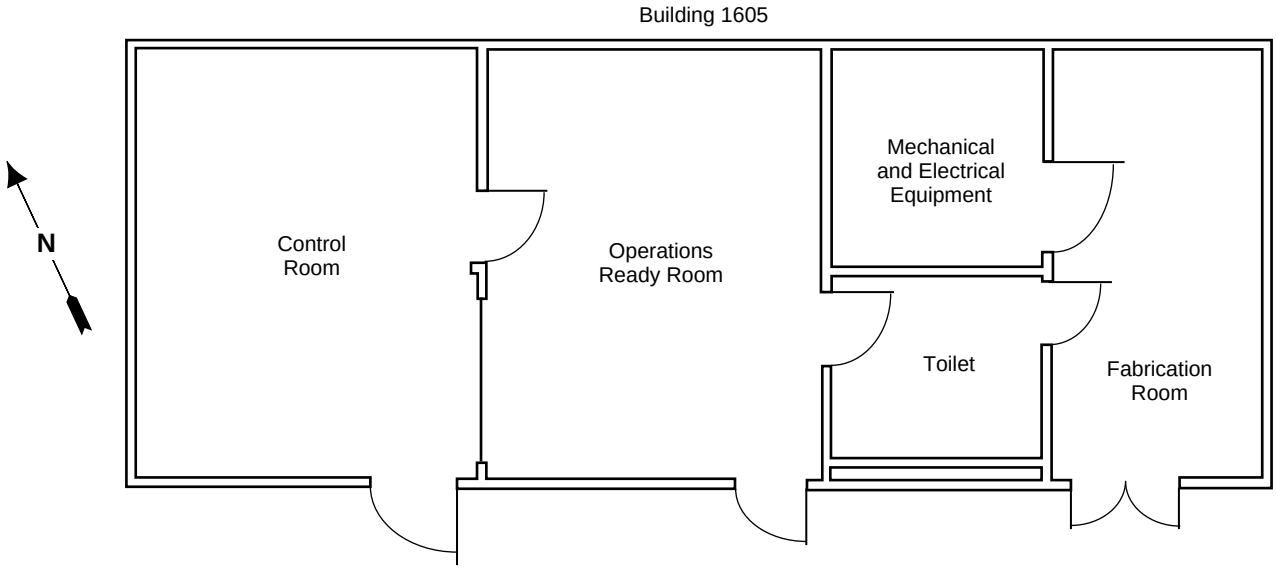

Figure 7-10. Control Room Building 1605 Floor Plan

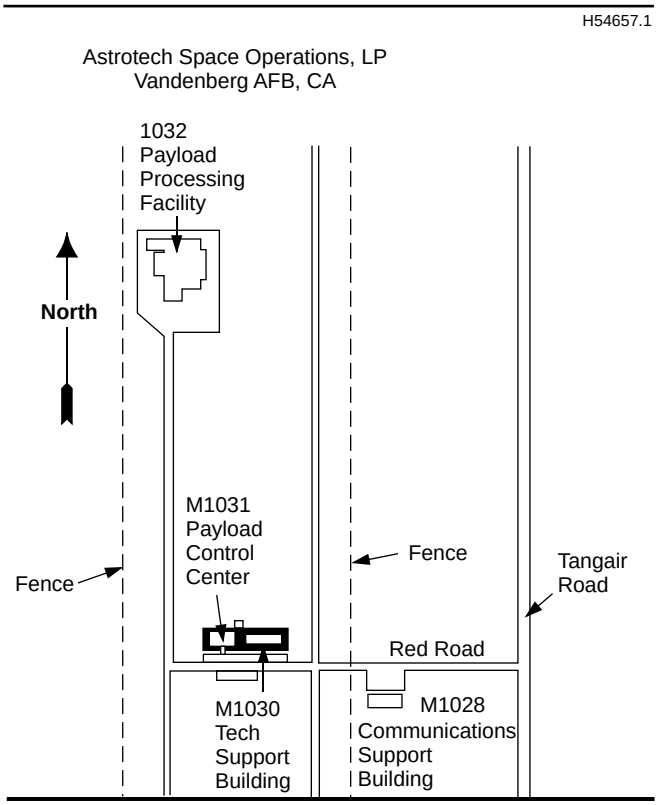

Figure 7-11. Astrotech Payload Processing Area

craft project officials with office space for conducting business during their their stay at Astrotech and the Western Launch Site.

Building 1028, the Communications Support Building, contains the fiber termination unit which is the communications interface bewteen the Astrotech facility and the Vandenberg communications network. This building also contains additional administrative facilities for spacecraft project officials.

7.2.3.1 Astrotech Building 1032. Building 1032 has overall plan dimensions of approximately 46 by 27 m (150 by 90 ft) and a maximum height of approximately 20 m (65 ft). Major features are an airlock/high bay, two high bays with control rooms, and three airlocks/low bays. The airlocks and high bays are Class 100,000 cleanrooms demonstrated capability, with the ability to achieve Class 10,000 or better cleanliness levels. The floor coverings in these areas are made of an electrostatic dissipating (high impedance) epoxy-based material. The ground-level floor plan of Building 1032 is shown in Figure 7-12. The airlock/high bay in Building 1032 has a floor area measuring 12.2 by 18.3 m (40 by 60 ft) and a clear vertical ceiling height of 13.7 m (45 ft). It provides environmentally controlled external access for large equipment entry into the high bays. The airlock/high bay contains a 9072 kg (10-ton) overhead crane with an 11.3 m (37-ft) hook height that serves both the airlock/high bay and the adjoining high bay. The two high bays in Building 1032 differ in size. The smaller high bay, which adjoins and is an extension of the airlock/high bay, has a floor area measuring 12.2 by 18.3 m (40 by 60 ft) and a clear vertical ceiling height of 13.7 m (45 ft). As noted above, the 10-ton overhead crane in the airlock/high bay also serves the smaller high bay. The larger high bay, which adjoins the smaller high bay, has a floor area measuring 15.3 by 21.4 m (50 by 70 ft) and a clear vertical ceiling height of 20 m (65 ft). The larger high bay has a 27,200-kg (30-ton) overhead traveling bridge crane with a maximum hook height of 16.8 m (55 ft).

Each high bay has an adjacent control room with floor areas as shown in Figure 7-2. A large exterior door is provided in each control room to facilitate installation and removal of equipment. Each control room has a large window for viewing activities in the high bay. Garment rooms support the high bay areas, and provide personnel access to them. Limiting access to the high bays through these rooms helps control personnel traffic and maintains a cleanroom environment.

There are three airlocks/low bays, two adjoining the smaller high bay and one adjoining the larger high bay. Each airlock/low bay has a floor area measuring 6.1 by 6.1 m (20 by 20 ft) and a clear vertical ceiling height of 3.7 m (12 ft). A large

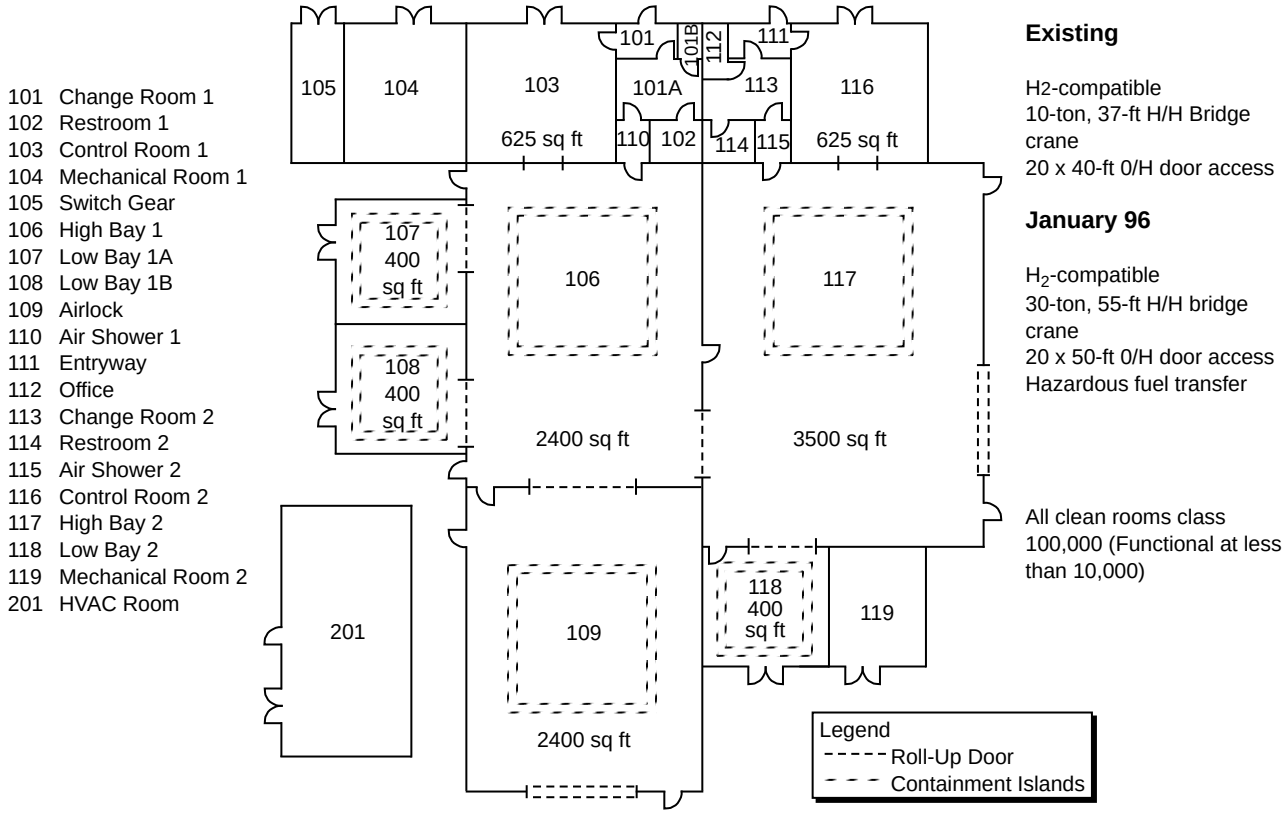

Figure 7-12. Astrotech Payload Processing Facility-Building 1032

exterior door is provided in each airlock/low bay and a roll-up door is located in the wall between the airlock/low bay and the adjoining high bay to provide environmentally controlled external access for small equipment entry into the high bays. The airlocks/low bays are also suitable for staging of liquid propellants.

7.2.3.2 Astrotech Building M1030. Building M1030 provides 223 m^2 (2,400 ft^2) of office and conference room space for the spacecraft project.

7.2.3.3 Astrotech Building 1028. Building 1028 provides 111 m^2 (1,200 ft^2) of office area for the spacecraft project.

7.2.4 California Spaceport Facilities

The California Spaceport is located on South Vandenberg immediately south and adjacent to SLC-6. The payload processing facility associated with the California Spaceport is located on South Vandenberg adjacent to the Spaceport. This processing facility is called the Integrated Processing Facility (IPF) because both booster components and payloads (satellite vehicles) can be processed in the building at the same time. This facility, originally built to process classified Space Shuttle payloads, is now a part of the Spaceport facilities. It is composed of two basic areas: the Processing Areas and the Technical Support Areas. Figures 7-13 and 7-14 illustrate the two major areas: the Processing Areas located on the north side of the building and the Technical Support Areas on the south side.

The cross-sectional view of the IPF shown in Figure 7-14 illustrates the relationships between the Technical Support Area and the Processing Area Level numbers. Level numbers are defined in feet above the SLC-6 launch mount. Rooms on two levels (89 and 101) provide office space and techni-

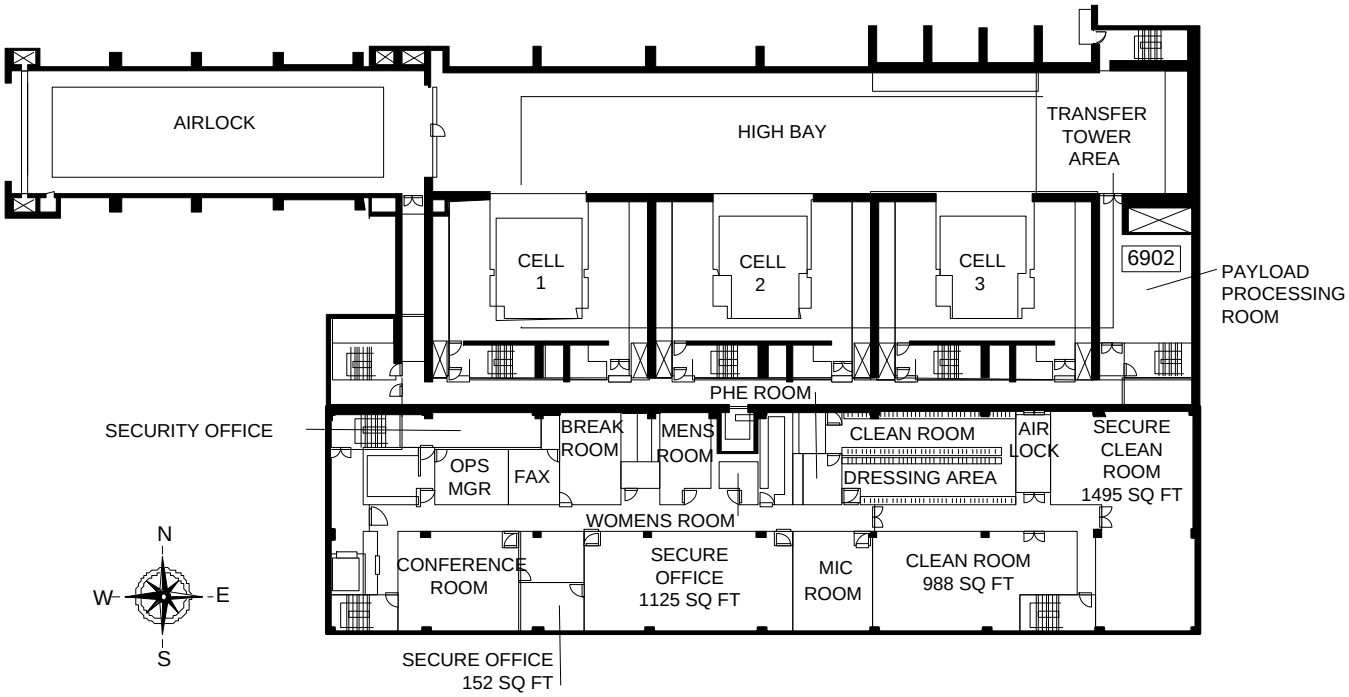

Figure 7-13. California Spaceport —Plan VIew of the IPF

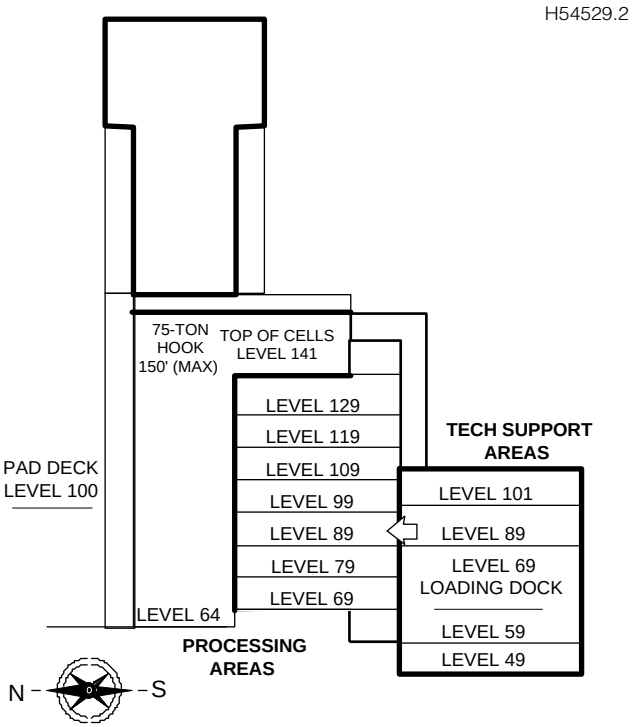

Figure 7-14. California Spaceport—IPF Cross-Sectional View

cal support rooms ranging from 14 to 150m^2 (150 to 1620 ft^2). These floors contain both "dirty" and clean elevators, clean dressing areas, tool cleaning areas, a PHE change room, dressing rooms, showers, break room, conference room, and rest rooms. An airlock on Level 89 separates the Technical Support Area from the Processing Areas.

7.2.4.1 Processing Areas. There are six major processing areas within the IPF:

1. Airlock
2. High Bay
3. Three Payload Checkout Cells (PCC)
4. Transfer Tower Area
5. Fairing Storage and Assembly Area (FSAA)
6. Miscellaneous Payload Processing Rooms (PPR)

There are seven levels on the processing side; six of these can be seen in Figure 7-14. The seventh (Fairing Storage and Assembly Area) can be seen in Figure 7-15. The Airlock and the High Bay are on Level 64. The Payload Checkout Cells floor and the Transfer Tower Area are on Level 69. In addition to

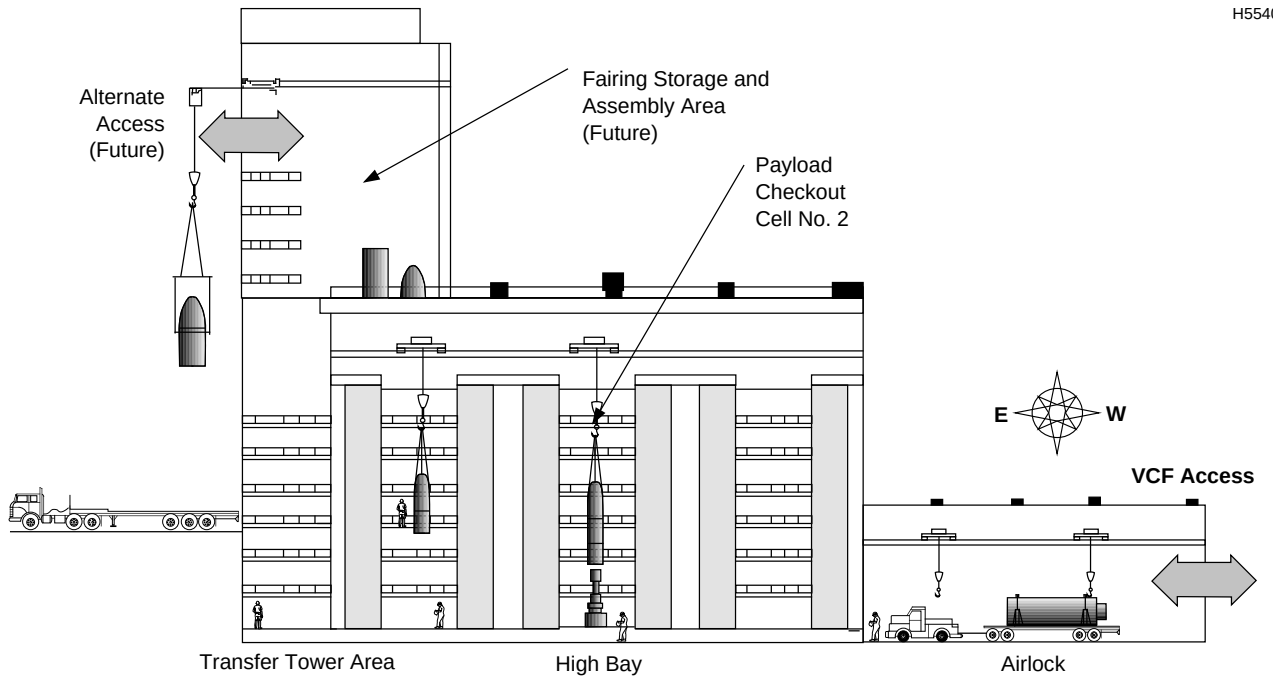

Figure 7-15. California Spaceport—Cutaway View of the IPF (looking south)

the cell floor at Level 69, there are six platform levels in each of the three Processing Cells: 79, 89, 99, 109, 119 and 129. There are Payload Processing Rooms on each level, providing a total of seven rooms similar to the Payload Processing Room shown in Figure 7-13, for small payload processing or processing support. Access is provided to the Processing Area through the airlock on Level 89 of the Technical Support Area.

Figure 7-15 illustrates the IPF as viewed in cutaway looking south and shows the location of the seventh area, the Fairing Storage and Assembly Area. This class 100,000 clean area provides the option for fairing storage and build-up prior to encapsulating the payload in the Transfer Tower Area.

Access to the IPF is through the 7.3-m (24-ft) wide, 8.5-m (28-ft) high main door on the west side of the Airlock. The 9.1-m by 30.5-m (30-ft by 100-ft) class 100,000 clean Airlock has two 5-ton overhead bridge cranes with a hook height of 10.8 m (35 ft, 5 in). The class 100,000 clean, 9.1-m by 44.8-m (30-ft by 147-ft) High Bay is serviced by a 75-ton bridge crane. The hook height in the High Bay is 26.3 m (86 ft, 4 in). Access to the High Bay is through the 7.3-m (24-ft) wide, 8.5-m (28-ft) door from the Airlock.

The three class 100,000 clean, 10.7-m by 13.4-m (35-ft by 44-ft) Payload Checkout Cells (PCC) are serviced by a 75-ton bridge crane with a 24.8 m (81 ft, 4 in) hook height. Each cell also has 5-ton crane support with a hook height of 21.9 m (71 ft, 11 in). Access to each cell is through doors from the High Bay with a total opening of 6.4 m (21 ft, 2 in).

Tables 7-1 through 7-7 detail some of the capabilities in each of the processing areas. They define constraints, customer-provided equipment, and technical capability summaries in nine categories: Space/Access, Handling, Electrical, Liquids, Pneumatics, Environmental Control, Safety, Security and Communications.

Some dimensions of the Processing Areas are summarized in Figure 7-16. Also shown are the crane envelopes for the 5-ton cranes in the Airlock;

Table 7-1. Vehicle Checkout Facility

Constraints	User-provided support
■ No secure communications ■ No installed propellant loading system ■ No installed propellant disposal system ■ No installed microwave or infrared intrusion detection system	■ GN_2 and He pressure carts ■ Spill aspirators

Capability type	Capability
1. Space/access	■ Floor loading for mobile equipment meets [AASHTO H-20] ■ 30-by-100 ft internal floor space ■ 28-ft-ht by 24-ft-w door openings ■ Adjacent to washdown area outside ■ Accept tow vehicle/transporter of 20 by 90 ft
2. Handling	■ Two 5-ton overhead bridge cranes ■ Crane maximum hook height of 35 ft 5 in ■ Speeds – Hoist 16 fpm – Bridge 14 fpm – Trolley 14 fpm ■ Pendant control at elevation 64 ft (floor)
3. Electrical	■ Utility and technical power 120/208 VAC ■ Hazard-proof electrical equipment as defined in the National Electrical Code Articles 500–516 ■ Multi-point grounding per MIL-STD-1542
4. Liquids	■ Cleaning water supply – 100 gpm at 80 psig – 1.5-in. male hose thread
5. Pneumatics	■ Compressed air 125 psig – 3/8-in. QD interface
6. Environment	■ Buffer for operations between external environment and High Bay ■ 100,000 clean room capability – Inlet air Class 5000 – Temp 70° ± 5° F – RH 30–50% – Dif 0.05-in. Wg – Air chg 10–12 changes/hr min ■ Central vacuum system
7. Safety	■ All electrical equipment is hazard-proof as defined in the National Electrical Code Articles 500–516 ■ Fire detection and suppression system
8. Security	■ Access control – KeyCard/cipher system – Intrusion detection system (BMS switches) – Vault doors with S&G 3-position tumbler – Lockable personnel and hardware access doors
9. Communications	■ Administrative phone ■ Operational Voice System (OVS) ■ Area warning system ■ Paging system

t2

Table 7-2. Vehicle Checkout Area

Constraints	User provided support
■ No secure communications ■ No installed propellant loading system ■ No installed propellant disposal system ■ No installed microwave or infrared intrusion detection system	■ GN_2 and He pressure carts ■ Spill aspirators

Capability type	Capability
1. Space/ access	■ Floor loading for mobile equipment meets [AASHTO H-20] ■ Work space approximately 30 in by 146 ft 9 in ■ Adjacent to Transfer Tower Area and Payload Checkout Cells
2. Handling	■ 75-ton overhead bridge main crane (currently proofloaded to 29 tons) ■ Hook height – VCA 86 ft 4 in above floor (floor at elev 64 ft) – Checkout cells 81 ft 4 in maximum above loor (floor at elev 69 ft) – Transfer tower 81 ft 4 in maximum above floor (floor at elev 69 ft) ■ Speeds – Hoist 10 fpm – Bridge E/W 15 fpm and 30 fpm – Trolley N/S 15 fpm and 10 fpm ■ Micro drive – Hoist 0.5 and 1.5 fpm – Bridge 0.5 fpm – Trolley 0.5 fpm ■ Two portable push-button stations with 60-foot flex cable ■ Connected to junction boxes on north wall
3. Electrical	■ Utility and technical power 120/208 VAC ■ Hazard-proof electrical equipment as defined in the National Electrical Code Articles 500–516 ■ Multi-point grounding per MIL-STD-1542
4. Liquids	■ None
5. Pneumatics	■ Gaseous Nitrogen (GN_2)
6. Environment	■ 100,000 clean room capability – Inlet air Class 5000 – Temp 70° ± 5° F – RH 30–50% – Dif 0.05-in. Wg – Air chg 10–12 changes/hr min ■ Central vacuum system
7. Safety	■ All electrical equipment is hazard-proof as defined in the National Electrical Code Articles 500–516 ■ Fire detection and suppression system (suppression system currently inactivated)
8. Security	■ Access control – KeyCard/cipher system – Intrusion detection system (BMS switches) – Lockable personnel and hardware access doors
9. Communi- cations	■ Administrative phone ■ Operational Voice System (OVS) ■ Area warning system ■ Paging system

t4

Table 7-3. Payload Checkout Cells Capabilities

Constraints	User-provided support
■ No installed GN_2 or GHe systems ■ Hypergolic propellant loading system in Cell 2 not activated ■ No installed propellant disposal system	■ GN_2 and He pressure carts ■ Spill aspirators

Capability type	Capability
1. Space/access	■ Design floor loading – 100 psf on checkout cell floor – 75 psf plus a 4000-lb load on four casters (4 by 6 ft) on fixed platforms – 50 psf plus a 1200-lb load on folding platforms ■ Work space approximately 35 by 44 ft ■ Cell door opening 21 ft 2 in x 71 ft high ■ Adjacent to Transfer Tower Area and High Bay ■ Six working platform levels (fixed and fold-down plus finger planks in Cells 2 and 3), spaced ten feet apart
2. Handling	■ 5-ton overhead bridge crane ■ Hook height (floor at elev 69 ft) – Cell 1 71 ft 6 in above floor – Cell 2 71 ft 11 in above floor – Cell 3 71 ft 4.5 in above floor ■ Speeds – Hoist 16 fpm (Cells 2/3) 10 fpm (Cell 1) – Bridge E/W 10 fpm – Trolley N/S 10 fpm (Cell 1) 5 fpm (Cell 2) 17 fpm (Cell 3) ■ Micro drive – Hoist 0.5 fpm – Bridge 0.5 fpm – Trolley 0.5 fpm ■ Portable push-button station with 45-foot flex cable connected to receptacle on northeast corner of cell on any level
3. Electrical	■ Utility and technical power 120/208, 408 VAC ■ Multi-point grounding per MIL-STD-1542
4. Liquids	■ Cleaning water supply – 50 gpm at 80 psig – 1-in hose bib with 1-in male hose thread on south wall of each level ■ Hypergolic
5. Pneumatics	■ Compressed air 125 psig 3/8-in. QD at two locations per cell
6. Environment	■ 100,000 clean room capability (Class 5000 HEPA) – Inlet air Class 5000 – Temp 55° to 75° ± 5°F selectable – RH 30–50% – Dif 0.05-in Wg – Air chg 15–17 changes/hr min ■ Central vacuum system
7. Safety	■ All electrical equipment is hazard-proof as defined in the National Electrical Code ■ Fire detection and suppression system (dry pipe, manual valve)
8. Security	■ Access control – KeyCard/cipher system – Intrusion detection system (BMS switches) – Vault doors with S&G 3-position tumbler – Lockable personnel and hardware access doors
9. Communications	■ Administrative phone ■ Operational Voice System (OVS) Cell 2 (Cells 1 and 3 planned) ■ Area warning system ■ Paging system

t6

BOEING®

Table 7-4. Transfer Tower Area

Capability type	Capability
1. Space/ access	■ 27-ft by 30-ft clear floor access ■ Design floor loading is 100 psf ■ Seven platforms on three sides (north, east and south) – 75 psf loading on platforms
2. Handling	■ 75-ton stationary hoist ■ Hook height of 166 ft 6 in above floor elevation 69 in ■ Speeds – Hoist 0.5, 5.0 and 10 fpm ■ Pendant control at elevation 139 ft 0 in and 165 ft 7 in.
3. Electrical	■ Utility power – 110 VAC ■ Hazard-proof electrical equipment as defined in the National Electrical Code Articles 500–516 ■ Static grounding reel
4. Liquids	■ None
5. Pneumatics	■ Compressed air 125 psig – 3/8-in QD interface
6. Environment	■ 100,000 clean room capability – Inlet air Class 5000 – Temp 70° ± 5° F – RH 30–50% – Dif 0.05-in. Wg – Air chg 10–12 changes/hr min ■ Central vacuum system
7. Safety	■ All electrical equipment is hazard-proof as defined in the National Electrical Code Articles 500–516 ■ Fire detection and suppression system
8. Security	■ Access control – KeyCard/cipher system – Intrusion detection system (BMS switches) – Vault doors with S&G 3-position tumbler – Lockable personnel and hardware access doors
9. Communi-cations	■ Administrative phone ■ Operational Voice System (OVS) ■ Area warning system ■ Paging system

t7

the 75-ton cranes servicing the High Bay, the Checkout Cells and the Transfer Tower Area; and the Checkout Cell 5-ton cranes. Vehicles and equipment enter through the main entry door in the west end of the Airlock. Personnel and support equipment access to the Checkout Cells is provided through the airlock on Level 89 of the Technical Support Area. There is also a personnel airlock entry door on the south side of the Airlock. The level 69 Payload Processing Room (6902) is shown in Figure 7-16; there are also rooms available on Levels 79, 89, 99, 109, 119 and 129. The rooms are 4.9 by 7.0 m (16 by 23 ft).

Table 7-5. Fairing Storage and Assembly Area

Capability type	Capability
1. Space/ access	■ Floor loading 75 psf on platforms ■ 32-by 63-ft internal floor space ■ 68-ft 6-in-h by 22-ft-w breechload door opening
2. Handling	■ 75-ton stationary hoist ■ Hook height of 166 ft 6 in above floor elevation 69 in ■ Speeds – Hoist 0.5, 5.0 and 10 fpm ■ Pendant control at elevation 139 ft 0 in and 165 ft 7 in
3. Electrical	■ 110 VAC, utility power ■ Hazard-proof electrical equipment as defined in the National Electrical Code Articles 500–516 ■ Multi-point grounding per MIL-STD-1542
4. Liquids	■ None
5. Pneumatics	■ Compressed air 125 psig – 3/8-in. QD interface
6. Environment	■ 100,000 clean room capability – Inlet air Class 5000 – Temp 70° ± 5° F – RH 30–50% – Dif 0.05-in. Wg – Air chg 10–12 changes/hr min ■ Central vacuum system
7. Safety	■ All electrical equipment is hazard-proof as defined in the National Electrical Code Articles 500–516 ■ Fire detection and suppression system
8. Security	■ Access control – KeyCard/cipher system – Intrusion detection system (BMS switches) – Lockable personnel and hardware access doors
9. Communi-cations	■ Paging system

t8

7.2.4.2 Technical Support Areas. Figures 7-17 and 7-18 illustrate the plan views of the IPF, showing Levels 89 and 101 of the Technical Support side. (Level numbers are defined in feet, with the SLC-6 launch mount defined as Level 100). These figures show room sizes as well as potential functions. Note that the clean elevator can only be accessed from the Technical Support side on Level 89 through the airlock (for support equipment) or the clean change room. From the elevator, any level on the Processing Side can be accessed.

7.3 SPACECRAFT TRANSPORT TO LAUNCH SITE

After completion of preparations in one of the spacecraft Processing Facilities the flight-config-

Table 7-6. Payload Processing Room 6902

Capability type	Capability
1. Space/ access	■ Processing/storage room 6902: – 21 ft 5 in by 23 ft – 495 sq ft ■ Door openings shall accommodate an envelope of 4 by 6 by 7 ft
2. Handling	■ None
3. Electrical	■ 110 VAC, utility power ■ 120/208 VAC 3 ph ■ Multi-point grounding per MIL-STD-1542 ■ Hazard-proof electrical equipment as defined in the National Electrical Code
4. Liquids	■ None
5. Pneumatics	■ None
6. Environment	■ 100,000 clean room capability – Inlet air Class 5000 – Temp 70° ± 5° F – RH 30–50% – Dif 0.05-in. Wg – Air chg 15 changes/hr min
7. Safety	■ Fire detection and suppression system
8. Security	■ Access control – KeyCard/cipher system – Intrusion detection system (BMS switches) – Lockable personnel and hardware access doors
9. Communi-cations	■ None

t9

Table 7-7. Payload Processing Room (PPR) 8910

Capability type	Capability
1. Space/ access	■ Processing/Storage Room: – 35 ft 6 in by 30 ft 0 in and 23 ft 6 in by 23 ft 6 in 1495 sq ft. total ■ Door openings shall accommodate an envelope of 4-ft by 6-ft by 7 ft
2. Handling	■ None
3. Electrical	■ 110VAC Utility power ■ 120/208VAC 3 ph ■ Hazard proof electrical equipment as defined in the National Electrical Code
4. Liquids	■ None
5. Pneumatics	■ None
6. Environment	■ Temp 65–80 F RH N/A Dif 0.5-in Wg Air Chgs 15 changes/hr min (goal) ■ Central Vacuum System
7. Safety	■ Fire detection and suppression system
8. Security	■ Keycard/cipher access control ■ Intrusion Detection system (BMS switches) ■ Lockable personnel and hardware access doors
9. Communi-cations	■ None

t12

H54527.2

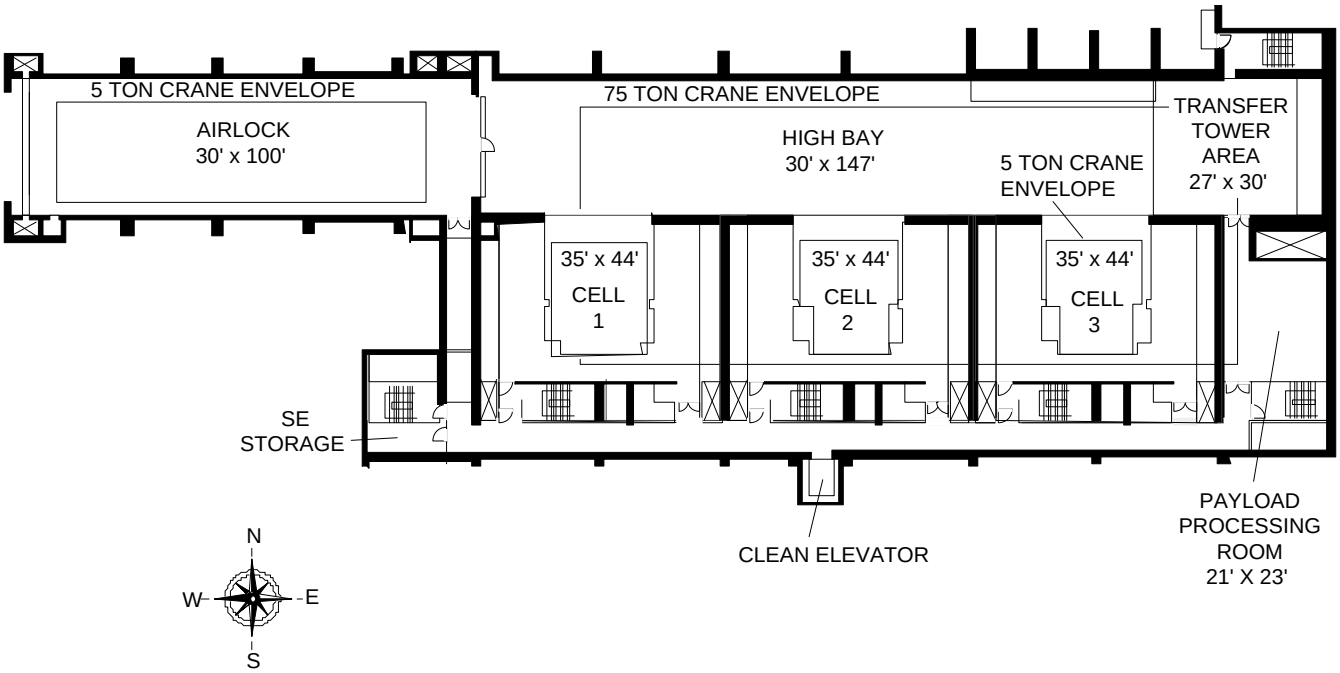

Figure 7-16. California Spaceport—Processing Areas

H54525.1

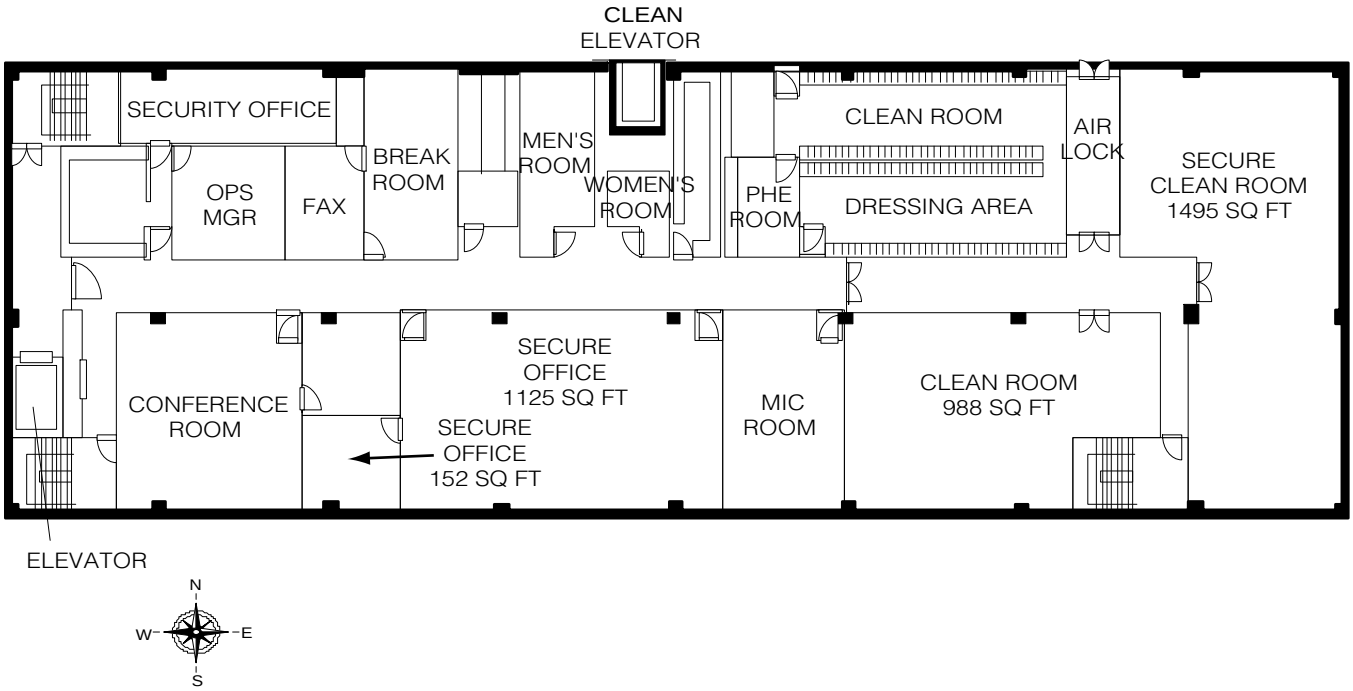

Figure 7-17. California Spaceport—Level 89 Technical Support Area

H54526.1

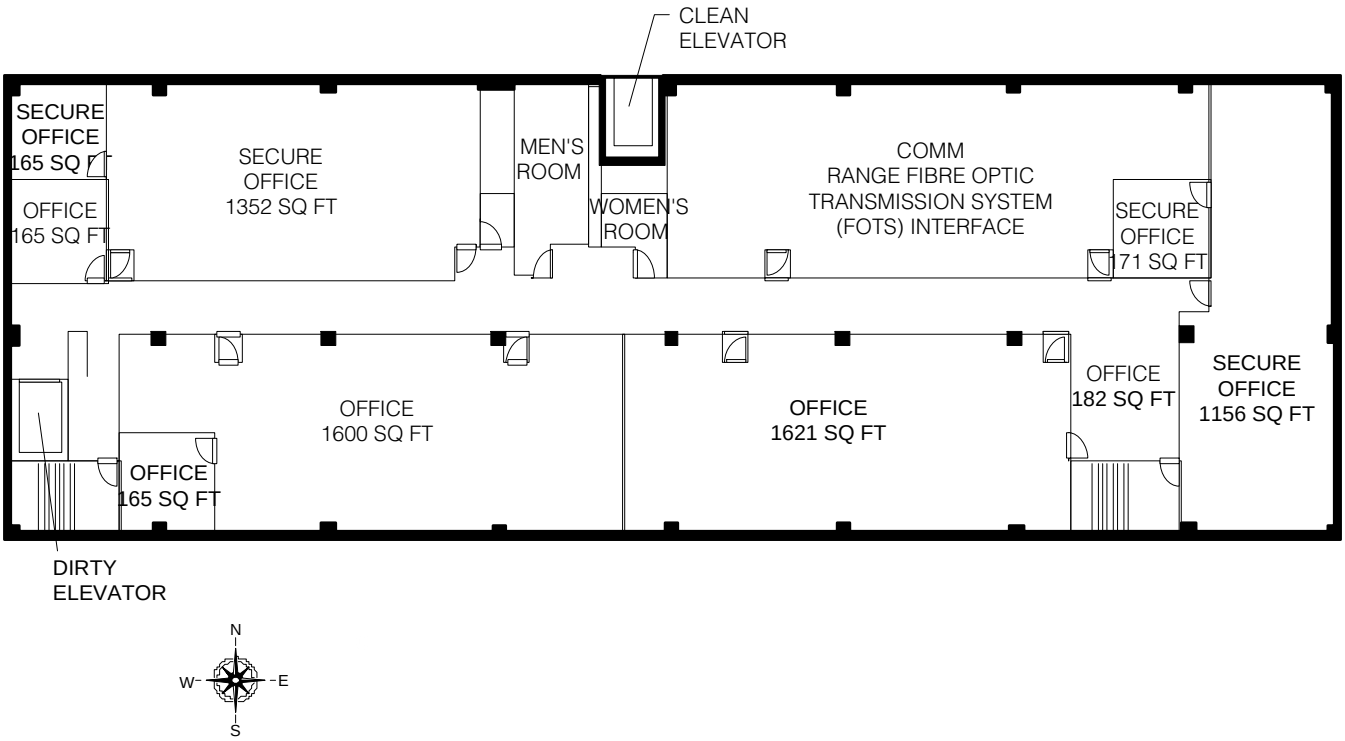

Figure 7-18. California Spaceport—Level 101 Technical Support Area

ured spacecraft is installed in a transportation handling can and moved to SLC-2 to be mated to the Delta II launch vehicle. MDA provides the transportation container (Figure 7-19) to support transportation of the spacecraft to the launch pad. The container (commonly called the handling can) can be configured for either three-stage or two-stage missions. The height of the handling can varies

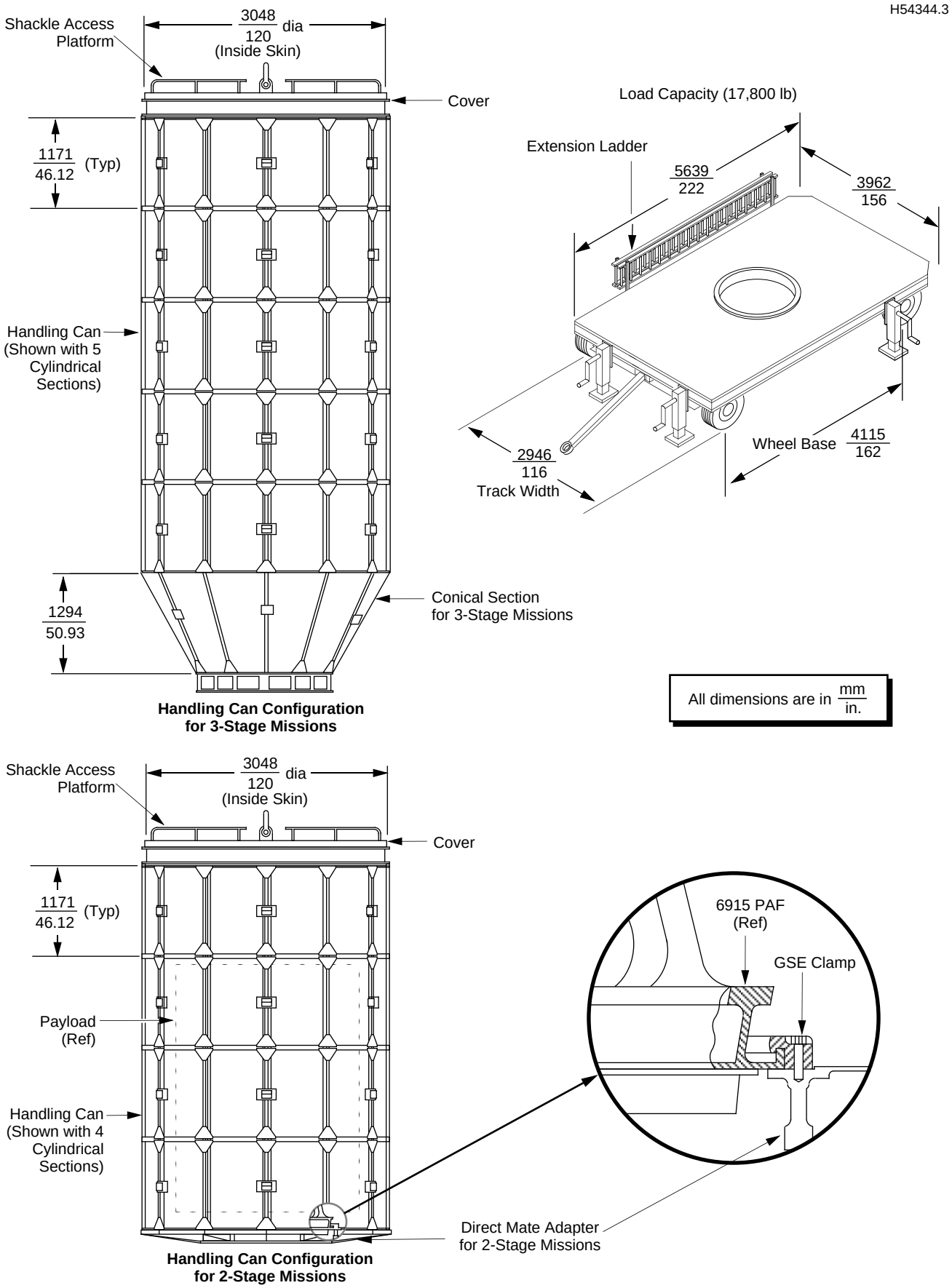

Figure 7-19. Upper-stage Assembly Ground Handling Can and Transporter

according to the number of cylindrical sections required for a safe envelope around the spacecraft.

The spacecraft handling can is supported on a rubber-tired transporter and, in a convoy, is slowly towed to the launch pad with MDA-provided tractors and security personnel. The spacecraft container is purged with GN_2 to reduce the relative humidity of the air inside the container and to maintain a slight positive pressure. Temperature in the container is not controlled directly, but is maintained at acceptable levels when transporting the spacecraft by selecting the time of day at which movement occurs. The Transportation Environment is monitored with recording instrumentation.

7.4 SPACE LAUNCH COMPLEX 2

SLC-2 (Figure 7-20) consists of one launch pad (SLC-2), a blockhouse, a Delta operations building, shops, a supply building, and other facilities necessary to prepare, service, and launch the Delta vehicle. An aerial view of SLC-2 is shown in Figure 7-21.

Because all operations in the launch complex involve or are conducted in the vicinity of liquid or solid propellants and/or explosive ordnance devices, the number of personnel permitted in the area, safety clothing to be worn, type of activity permitted, and equipment allowed are strictly regulated. Adherence to all safety regulations is required. Briefings on all these subjects are given to those required to work in the launch complex area.

The SLC-2 MST (Figure 7-22) is a 54.3-m (178-ft) high structure with nine working levels designated as A, B, C, 1, 2, 3, 4, 5, and 6. An elevator provides access to seven of the levels, B through 5. The white room (spacecraft area) encloses Levels 4, 5, and 6 (Figures 7-23 and 7 -24). However, Level 4 is not used for spacecraft work. Levels 4 and 5 are fixed platforms, and Level 6 is an adjustable platform with a range of 399 cm (157 in.) (Figure 7-25). The white room enclosure is con-

H54345.2

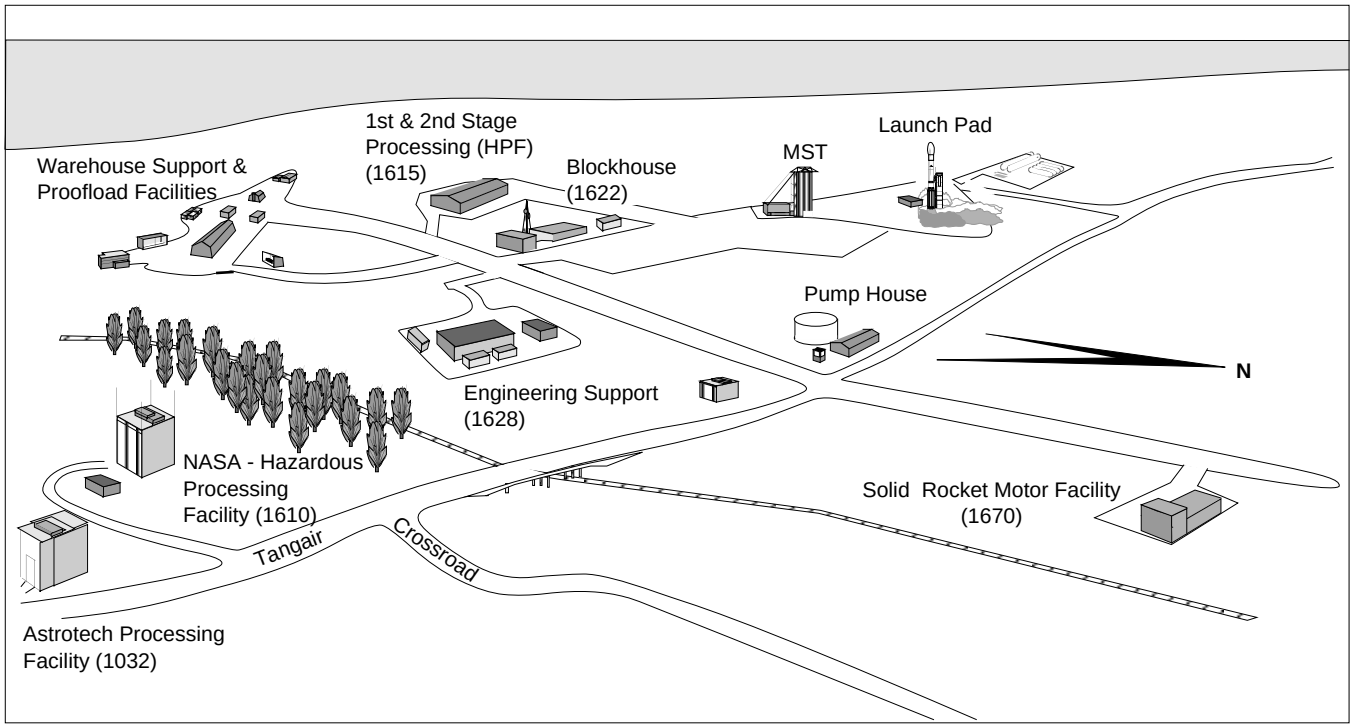

Figure 7-20. Space Launch Complex-2, Vandenberg Test Center

DAC1311768

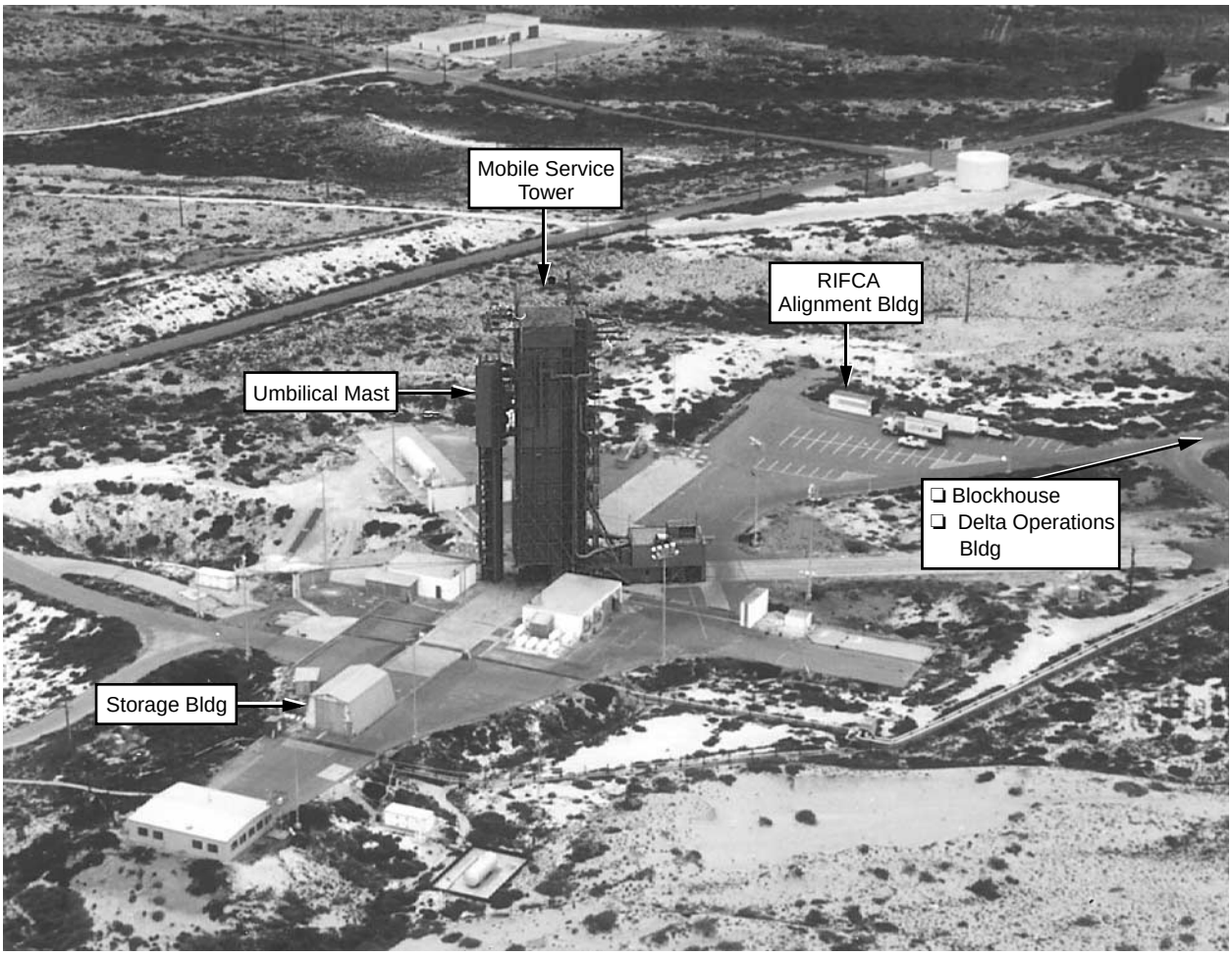

Figure 7-21. Space Launch Complex SLC-2, VAFB–Aerial View Looking East

structed of RF-transparent panels. An internal bridge crane with a 4545-kg (5-ton) capacity, used for fairing and spacecraft equipment that must be moved within the MST, has a maximum hook height of 9.83 m (32 ft 3 in.) above Level 5 (Figure 7-26). Space is available on Level 5 for spacecraft GSE. Placement of the GSE must be coordinated with MDA and appropriate seismic restraints provided.

The entire MST is constructed to meet explosion-proof safety requirements. The restriction on the number of personnel admitted to the white room is governed by safety requirements, as well as the limited amount of work space and the cleanliness level required on the spacecraft levels.

Launch operations are controlled from the blockhouse, which is equipped with vehicle monitoring and control equipment. Space is also allocated for use by spacecraft personnel (Figures 7-27 and 7-28). In addition, a spacecraft console (Figure 7-29) that will accept a standard rack-mounted panel is available. Terminal board connections in the console provide electrical connection to the space craft umbilical wires.

7.5 SUPPORT SERVICES

7.5.1 LAUNCH SUPPORT

For countdown operations, the launch team is located in the blockhouse at Space Launch Complex 2, and Buildings 836 and 840, with support from other base organizations.

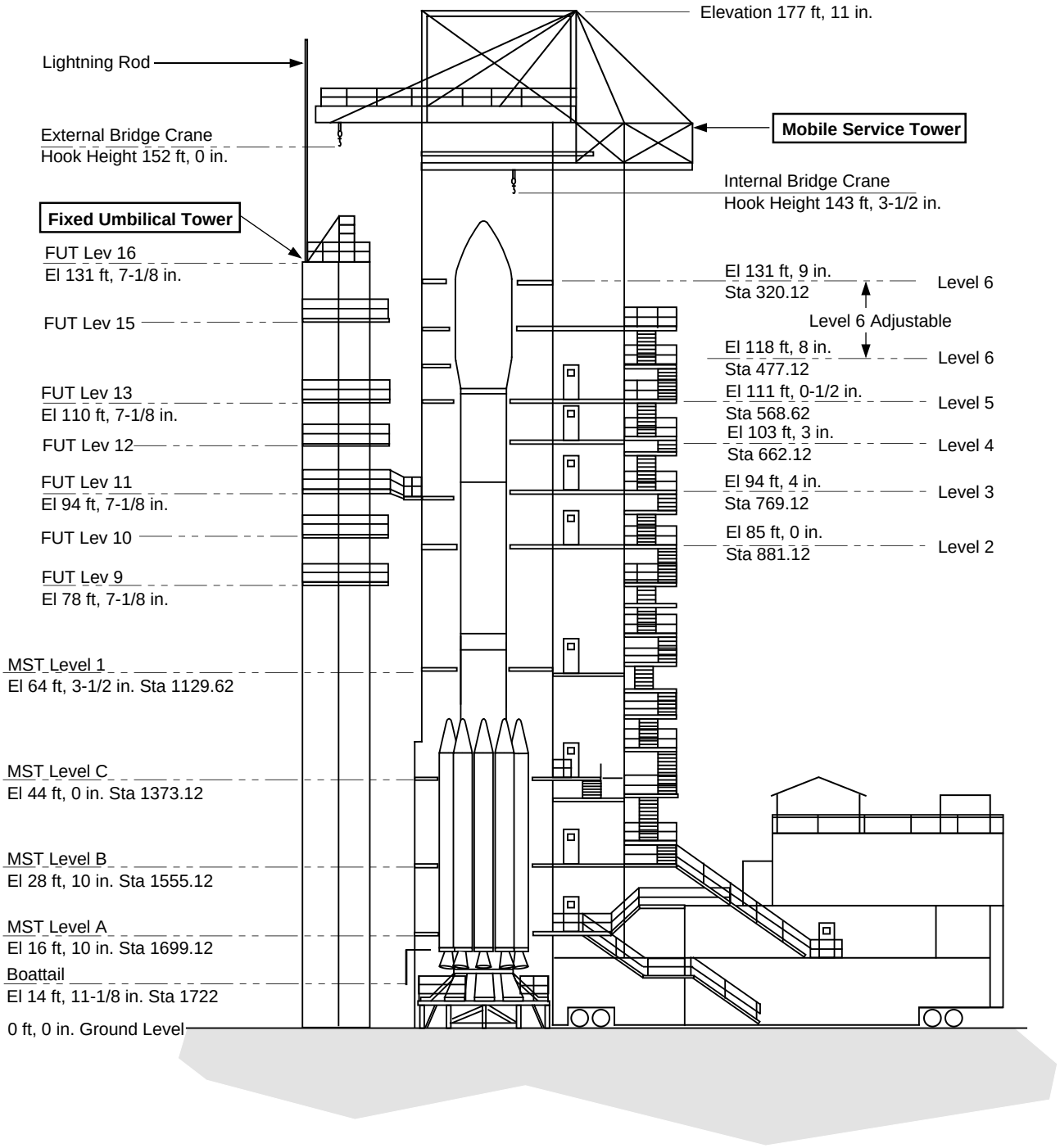

Figure 7-22. SLC-2 MST/FUT Elevation

All dimensions are in Meter / Foot

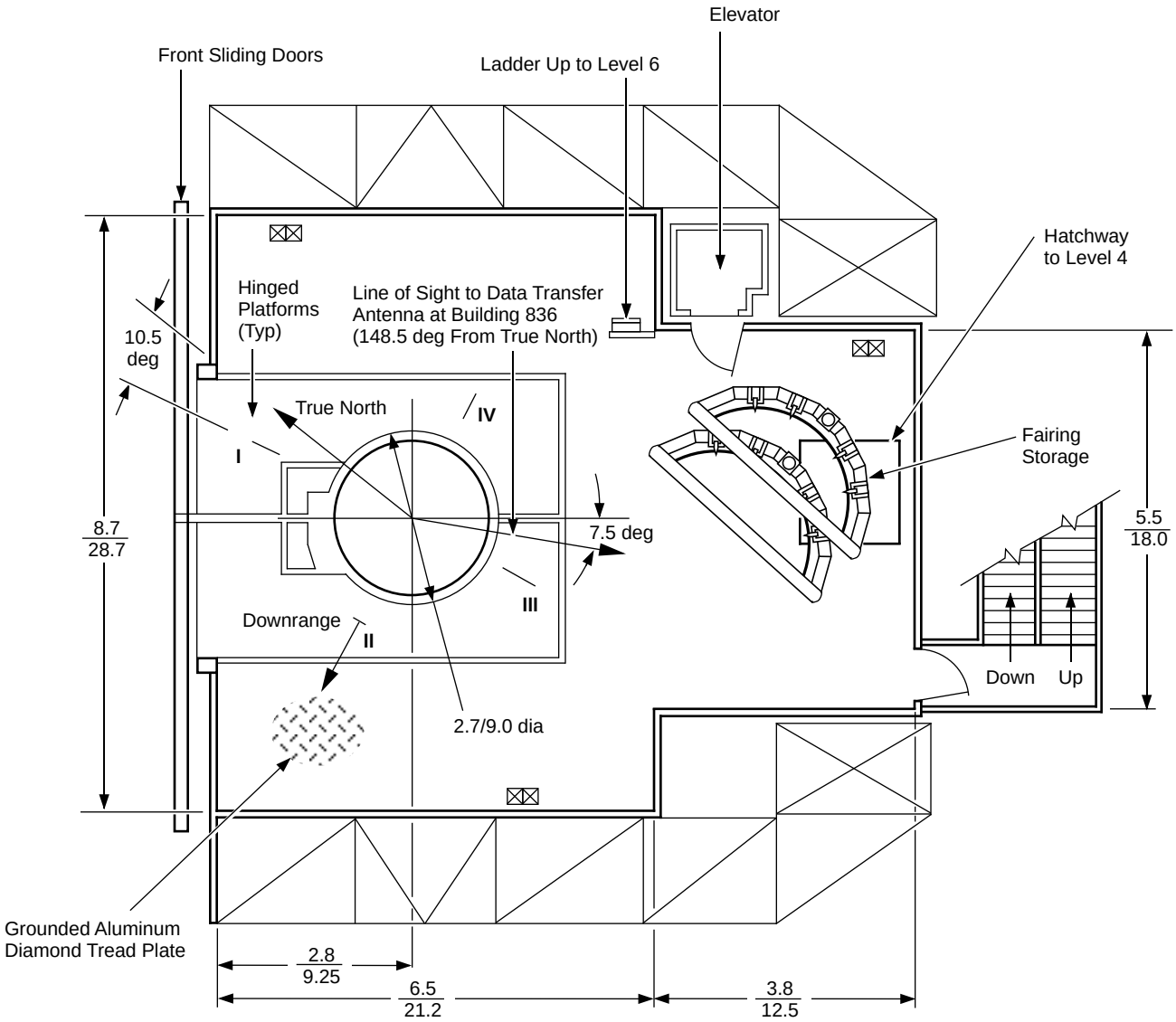

Notes:
- ❑ Downrange refers to the orientation of the launch pad and not the Delta trajectory
- ❑ The location of the spacecraft GSE on Level 5 must be coordinated with MDA

☒ 120 Volt, 60 Amp, Phase 1 Outlet

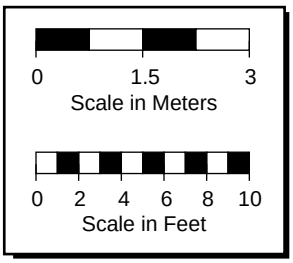

Figure 7-23. Level 5 of SLC-2 Mobile Service Tower–Plan View

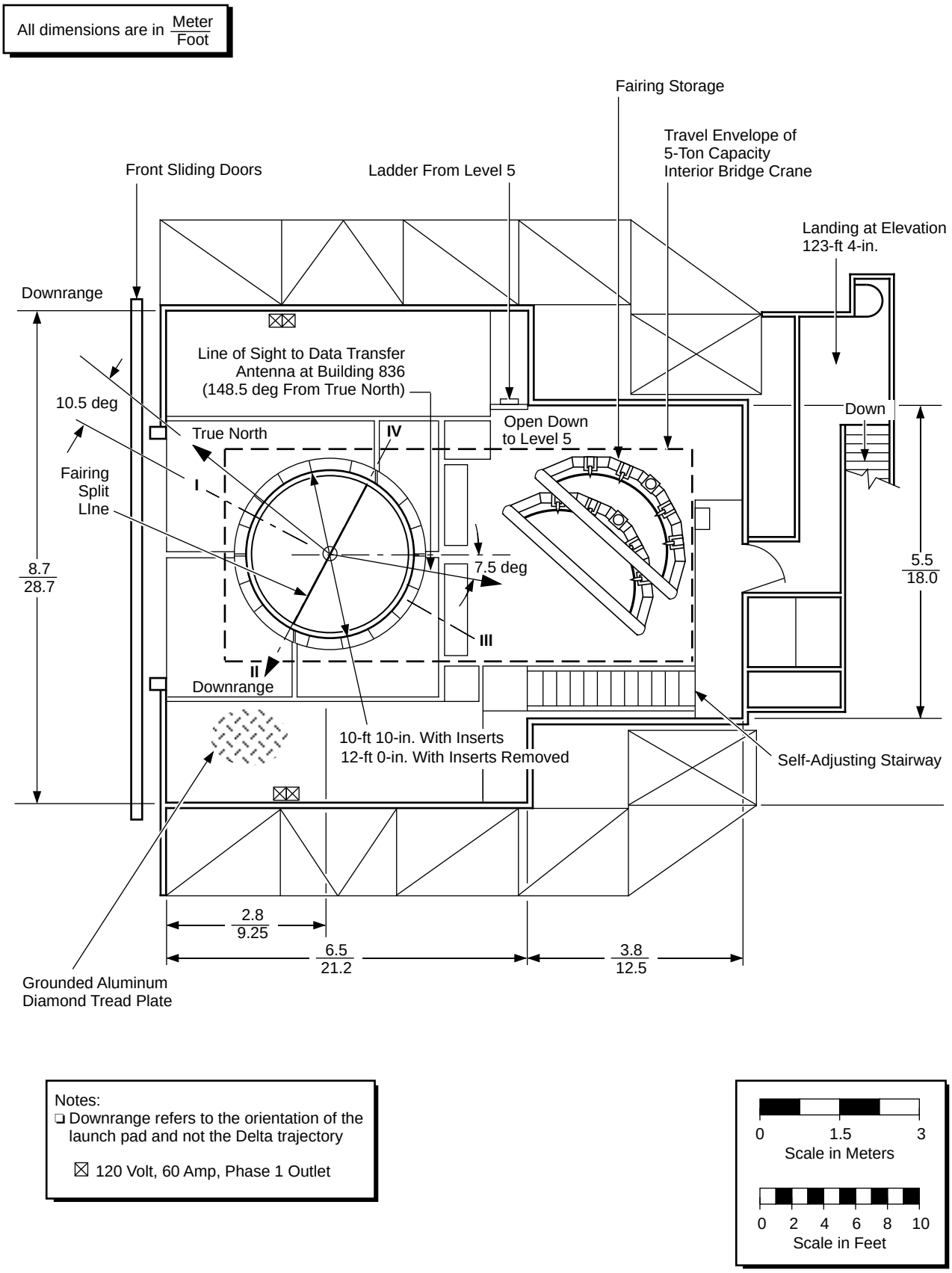

Figure 7-24. Level 6 of SLC-2 Mobile Service Tower–Plan View

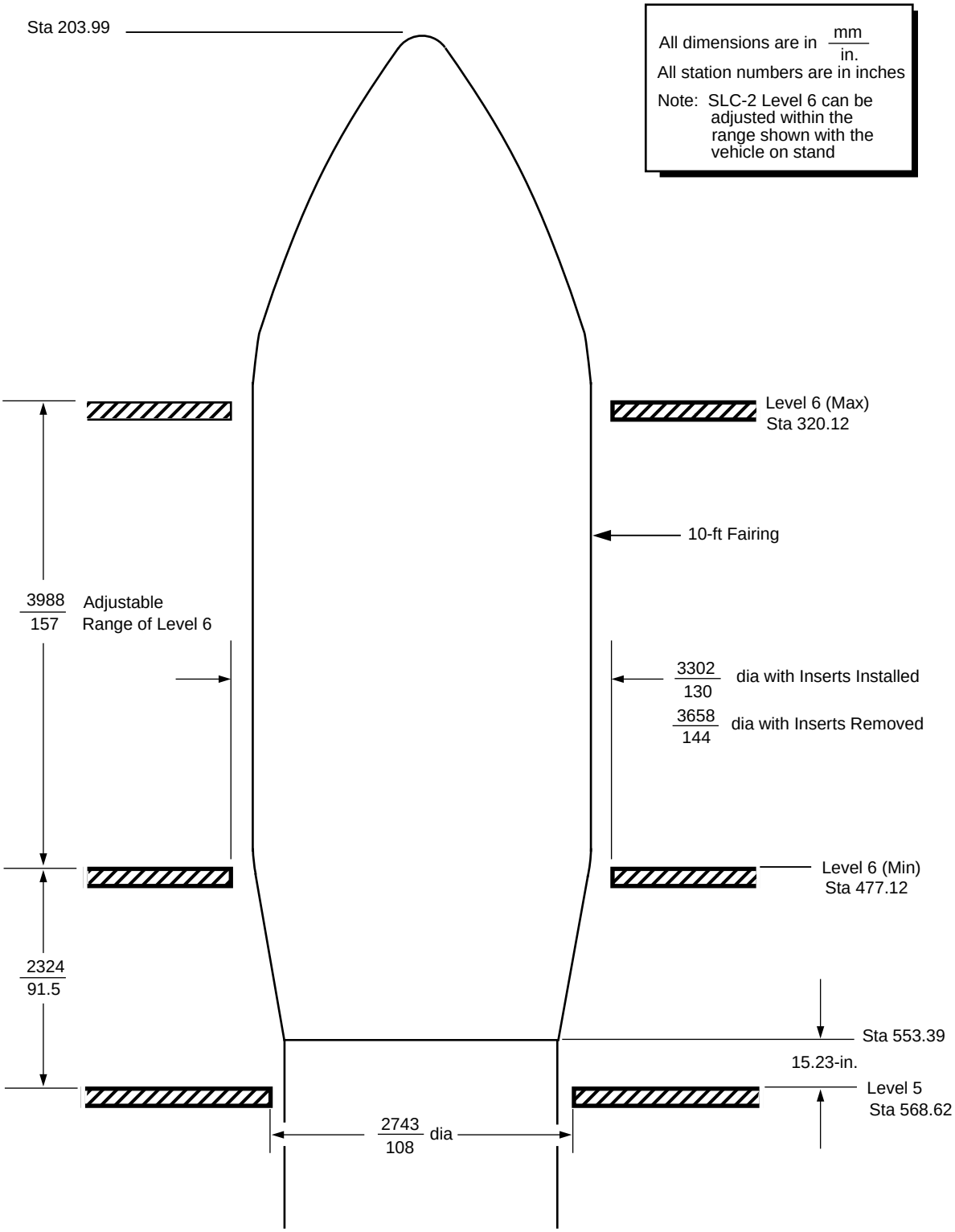

Figure 7-25. Spacecraft Work Levels in SLC-2 Mobile Service Tower–VAFB (Download Figure)

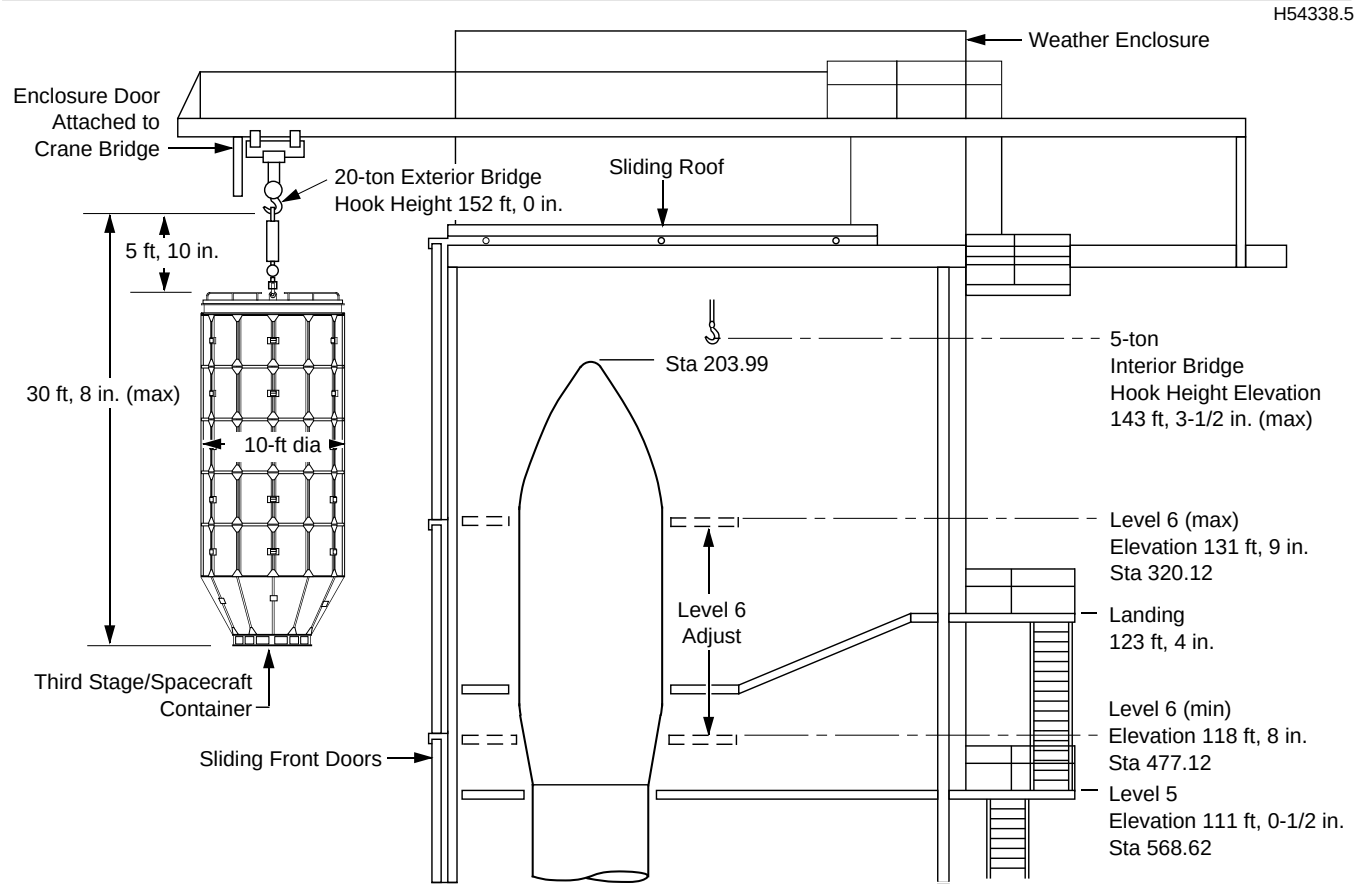

Figure 7-26. Whiteroom Elevations and Hook Heights—SLC-2 Mobile Service Tower

7.5.1.1 Mission Director Center (Building 840). The Mission Director Center, Figure 7-7, provides the necessary seating, data display, and communications to control the launch process. Seating is provided for key personnel from MDA, Western Range, and the spacecraft control team. For NASA launches, key NASA personnel will also occupy space in the Mission Director Center.

7.5.1.2 Space Launch Complex 2 Blockhouse. Launch operations are controlled from the blockhouse, which is equipped with vehicle monitoring and control equipment. Space is also allocated for the spacecraft blockhouse consoles and console operators. Terminal board connections in the spacecraft blockhouse junction box provide electrical connection to the spacecraft umbilical wires.

7.5.1.3 Launch Decision Process. The launch decision process is made by the appropriate management personnel representing the spacecraft, launch vehicle, NASA, and range. Figure 7-30 shows the communications flow required to make the launch decision. For NASA missions, a Mission Director, launch management advisory team, engineering team, and quality assurance personnel will also participate in the launch decision process.

7.5.2 Weather Constraints

7.5.2.1 Ground-Wind Constraints. The MST encloses the Delta II until approximately L-7 hours and provides protection to the vehicle from ground winds. The winds are measured using an anemometer at the 16.5-m (54-ft) level of the MST.

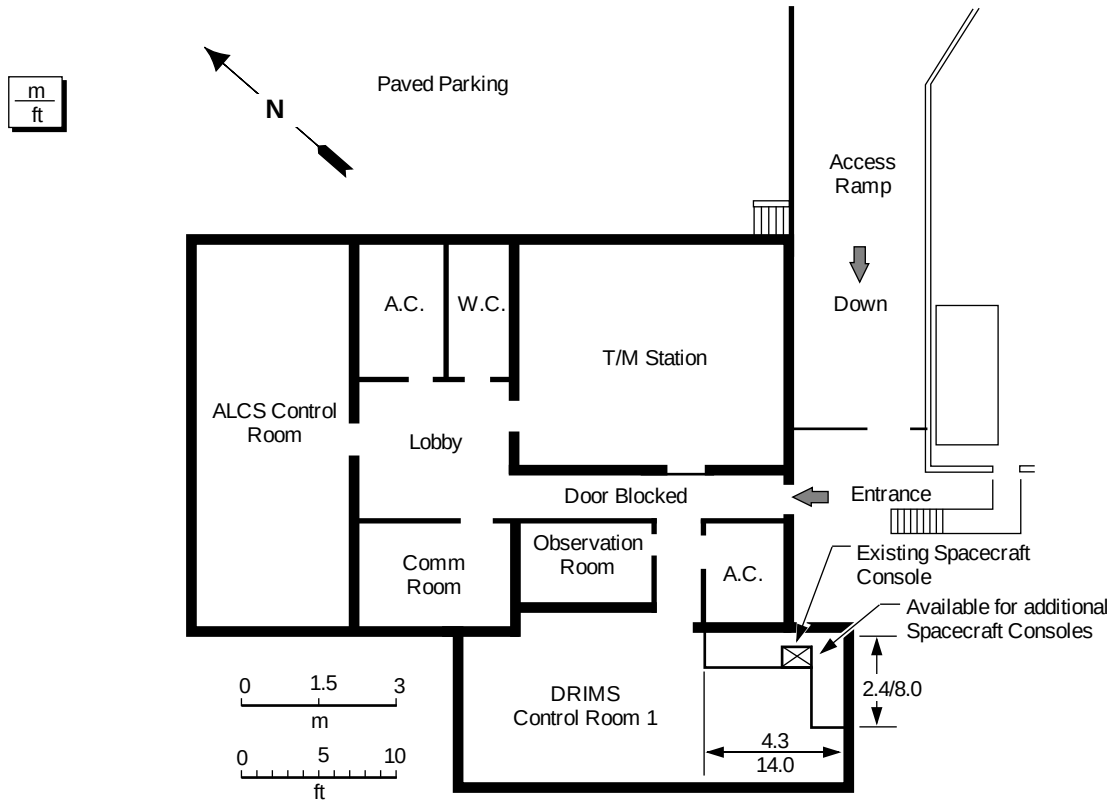

Figure 7-27. SLC-2 Blockhouse

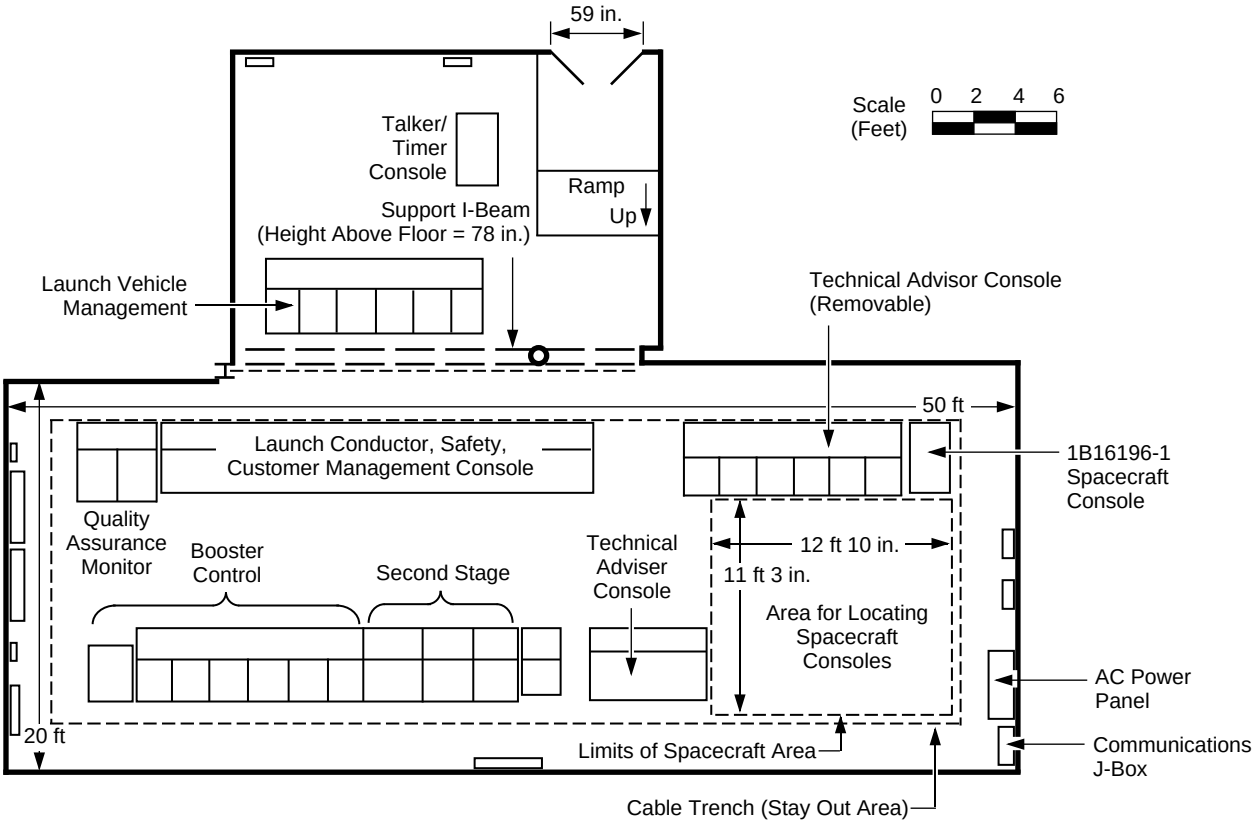

Figure 7-28. SLC-2 Blockhouse Control Room

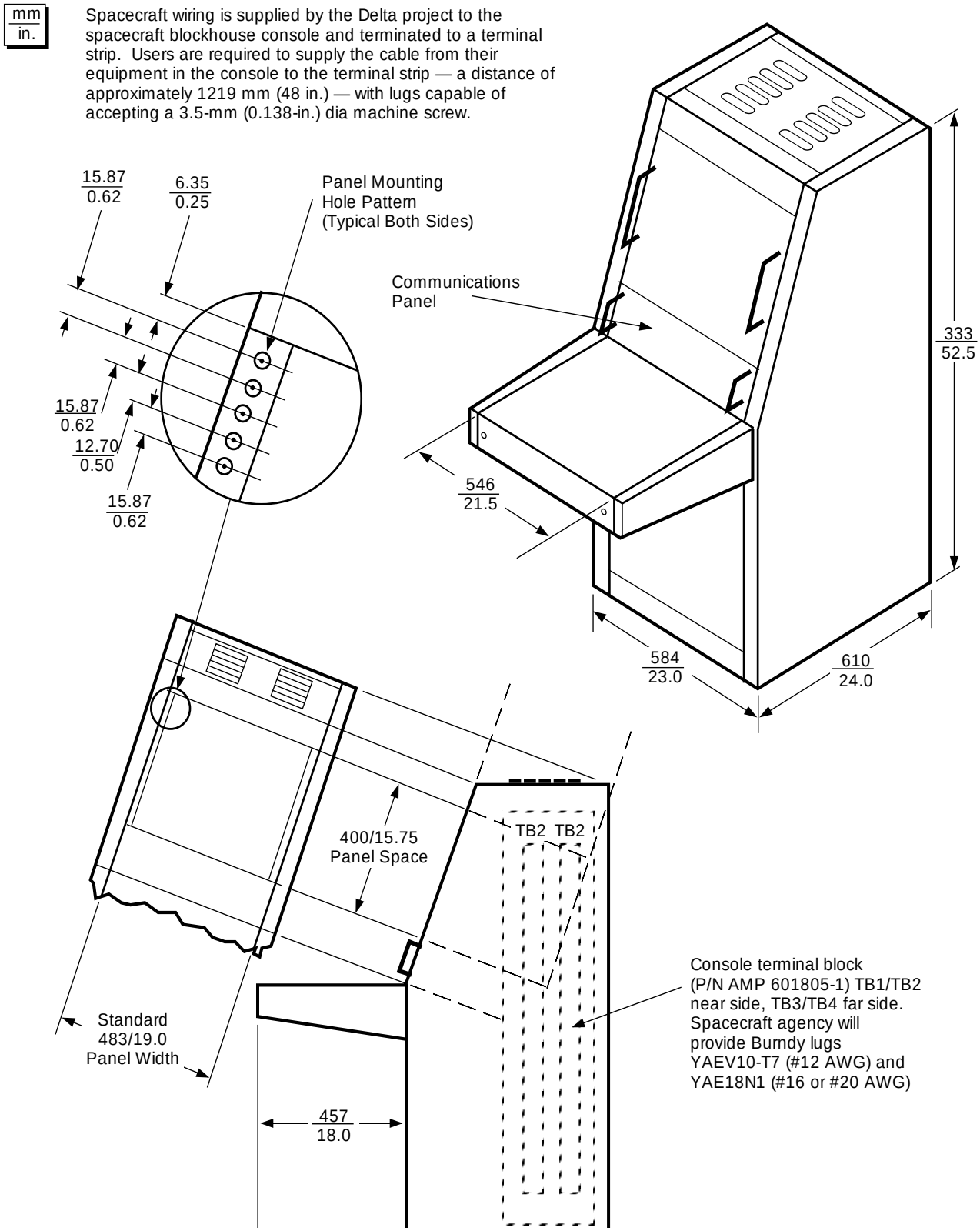

Figure 7-29. Spacecraft Blockhouse Console-Western Range

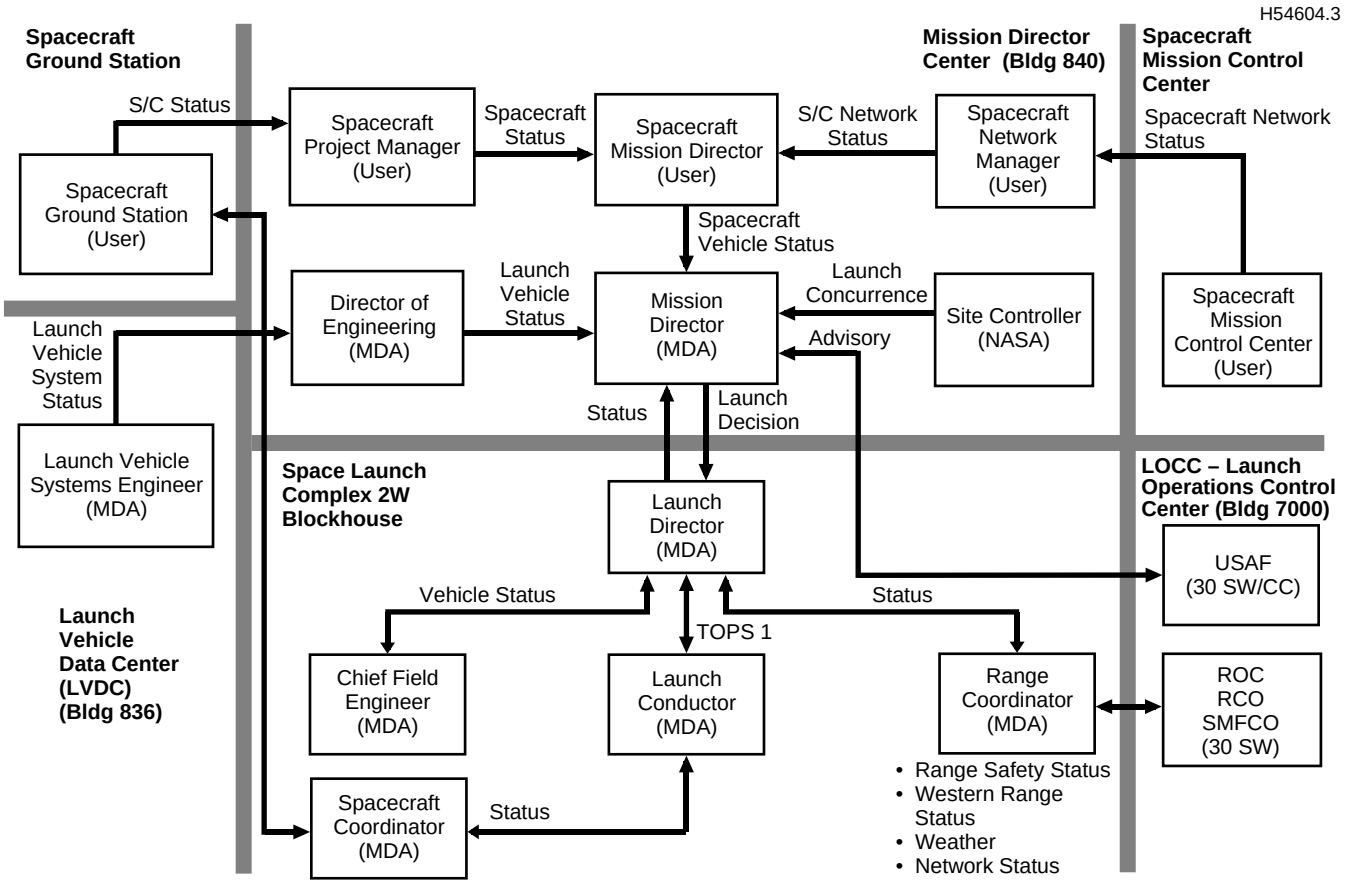

Figure 7-30. Launch Decision Flow for Commercial Missions–Western Range

The following ground-wind limitations including gusts apply:

A. The MST shall not be moved from the Delta II if ground winds in any direction are predicted to exceed 30 knots (35 mph) or if the actual measured wind speed is in excess of 25 knots (30 mph) measured at the 16.5-m (54-ft) anemometer height.

B. The maximum allowable ground winds at the 31.1-m (102-ft) level are shown on Figure 7-31 for 792X vehicles with lengthened nozzles on the air-ignited GEMs. As noted on the figure, the constraints are a function of the predicted liftoff solid motor propellant bulk temperature. This figure is applicable for both 9.5-ft and 10-ft diameter fairing configurations. This plot combines liftoff controls, liftoff loads, and on-stand structural ground-wind restrictions.

7.5.2.2 Winds-Aloft Constraints. Measurements of winds aloft are taken in the vicinity launch pad. The Delta II controls and loads constraints for winds aloft are evaluated on launch day by conducting a trajectory analysis using the measured wind. A curvefit to the wind data provides load relief in the trajectory analyses. The curvefit and other load-relief parameters are used to set the mission constants just prior to launch.

7.5.2.3 Weather Constraints. Weather constraints are imposed to ensure safe passage of the Delta II launch vehicle through the atmosphere. The following is a general overview of the constraints evaluated prior to liftoff. Appendix B list the detailed weather constraints.

A. The launch will not take place if the normal flight path will carry the vehicle:

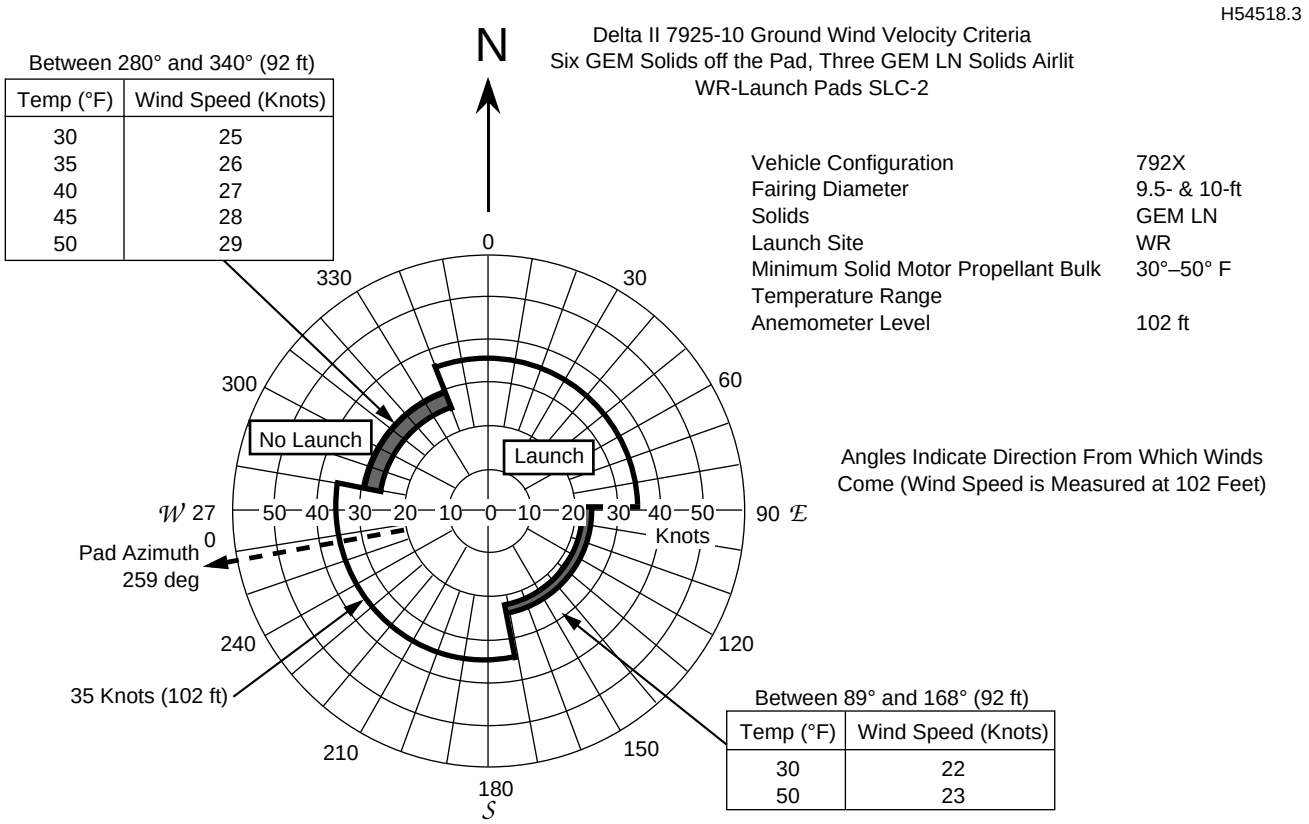

Figure 7-31. Delta II 792x Ground Wind Velocity Criteria, SLC-2

1. Within 18.5 km (10 nmi) of a cumulonimbus (thunderstorm) cloud, whether convective or in layers, where precipitation or virga is observed.

2. Through any cloud, whether convective or in layers, where precipitation or virga is present.

3. Through any frontal or squall-line clouds which extend above 3048 m (10,000 ft).

4. Through cloud layers or through cumulus clouds where the freeze level is in the clouds.

5. Through previously electrified clouds not monitored by an electrical field mill network if the dissipating state was short-lived (less than 15 minutes after observed electrical activity).

B. The launch will not take place if there is precipitation over the launch site or along the flight path.

C. A weather observation aircraft is mandatory to augment meteorological capabilities for real-time evaluation of local conditions unless a cloud-free line of sight exists to the vehicle flight path. Rawinsonde will not be used to determine cloud buildup.

D. Even though the above criteria are observed, or forecast to be satisfied at the predicted launch time, the launch director may elect to delay the launch based on the instability of the current atmospheric conditions.

7.5.2.4 Lightning Activities. The following are procedures for test status during lightning activity:

A. Evacuation of the MST and the fixed umbilical tower (FUT) is accomplished at the direction of the Launch Conductor (Reference: Delta Launch Complex Safety Plan).

B. First- and second-stage instrumentation may be operated during an electrical storm.

C. If other vehicle electrical systems are powered when an electrical storm approaches, these systems

may also remain powered. If category A electro-explosive device (EED) circuits are electrically connected in the launch configurations, the guidance computer must be turned off.

D. If an electrical storm passes through after a simulated flight test, all electrical systems are turned on in a quiescent state, and all data sources are evaluated for evidence of damage. This turn-on is done remotely (pad clear) if any category A ordnance circuits are connected for flight. Ordnance circuits are disconnected and safed prior to turn-on with personnel exposed to the vehicle.

E. If data from the quiescent turn-on reveal equipment discrepancies that can be attributed to the electrical storm, a flight program requalification test must be run subsequent to the storm and prior to a launch attempt.

F. During terminal countdown, the launch director is responsible for initiating and ending an alert. Upon initiation of an alert, the GC is turned off. When the alert is lifted, the GC is turned on and memory verified.

7.5.3 Operational Safety

Safety requirements are covered in Section 9 of this manual. In addition, it is the operating policy at MDA that all personnel will be given safety orientation briefings prior to entrance to hazardous areas such as SLC-2. These briefings will be scheduled by the MDA spacecraft coordinator and presented by the appropriate safety personnel.

7.5.4 Security

7.5.4.1 Space Launch Complex 2. SLC-2 security is ensured by perimeter fencing, interior fencing, guards, and access badges. White room access is controlled at the MST entrance. To gain access, visitors' names must be on the White Room Entry Authority List (EAL), and they must sign in and exchange badges at the access control station.

7.5.4.2 Hazardous Processing Facility. Physical security at the Hazardous Processing Facility (Building 1605, 1610) is provided by a chain link perimeter fence, a guard house gate, door locks, and guards. Details of the spacecraft security requirements are arranged through the MDA spacecraft coordinator.

7.5.4.3 Spacecraft Processing Laboratories. Physical security at the Spacecraft Processing Laboratories (Building 836) is provided by door locks and guards. Details of the spacecraft security requirements are arranged through the MDA spacecraft coordinator or appropriate payload processing facility.

7.5.4.4 VAFB Security. For access to VAFB, US citizens must provide full name with middle initial if applicable, social security number, company name, and dates of arrival and expected departure to the MDA spacecraft coordinator or MDA/VAFB Security. MDA Security will arrange for entry authority for commercial missions or individuals sponsored by MDA. Access by NASA personnel or US Government sponsored Foreign Nationals is coordinated by NASA KSC with the USAF at VAFB. For non-United States citizens, clearance information (name, nationality/citizenship, date and place of birth, passport number and date/place of issue, visa number and date of expiration, and title or job description) must be furnished to MDA two weeks prior to the VAFB entry date. Government sponsored individuals must follow NASA or U.S. Government guidelines as appropriate. The spacecraft coordinator will furnish visitor identification documentation to the appropriate agencies. After MDA Security gets clearance approval, entry to VAFB will be the same as for US citizens.

7.5.5 Field-Related Services

MDA employs certified propellant handlers ensemble (PHE) suit propellant handlers, equipment drivers, welders, riggers, and explosive ordnance handlers, in addition to people experienced in most electrical and mechanical assembly skills, such as torquing, soldering, crimping, precision cleaning, and contamination control. MDA has under its control a machine shop, metrology laboratory, LO_2 cleaning facility, and proof-loading facility. MDA's operational team members are familiar with USAF and NASA payload processing facilities at VAFB and can offer all of these skills and services to the spacecraft project during the launch program.

7.6 DELTA II PLANS AND SCHEDULES

7.6.1 MISSION PLAN

A Mission Plan (Figure 7-32) is developed for each launch campaign showing major tasks on a weekly timeline format. The plan includes launch vehicle activities, prelaunch reviews, and spacecraft processing area occupancy times.

7.6.2 Integrated Schedules

The schedule of spacecraft activities before integrated activities in the HPF varies from mission to mission. The extent of spacecraft field testing varies and is determined by the spacecraft agency.

Spacecraft/launch vehicle schedules are similar from mission to mission from the time of spacecraft weighing until launch.

Daily schedules are prepared on hourly timelines for these integrated activities. These schedules cover four days of integrated effort in the HPF and 8 days of launch countdown activities. HPF tasks include spacecraft weighing, spacecraft third stage mate and interface verification, and transportation can assembly around the combined payload.

The countdown schedules provide a detailed hour-by-hour breakdown of launch pad operations, illustrating the flow of activities from spacecraft erection through terminal countdown, and reflecting inputs from the spacecraft project. These schedules comprise the integrating document to ensure timely launch pad operations.

Typical schedules of integrated activities from spacecraft weighing in the HPF until launch (Figures 7-33 through 7-45) are shown as launch minus (F-) workdays. Saturdays, Sundays, and holidays are not scheduled workdays and, therefore, are not F- days. The F- days, from spacecraft mate through launch, are coordinated with each spacecraft agency to optimize on-pad testing. All operations are formally conducted and controlled using launch countdown documents. The schedule of spacecraft activities during that time is controlled by the MDA Launch Operations Manager. Tasks involving the spacecraft or tasks requiring that spacecraft personnel be present are shaded for easy identification.

A typical three-stage mission from VAFB is as follows; spacecraft and third-stage checkout are completed before F-12 day.

F-12 Tasks include equipment verification, precision weighing of spacecraft, and securing.

F-11 Spacecraft is lifted and mated to the third stage. The clampband is installed and the initial clampband tension established.

F-10 Final preparations are made prior to can-up for both spacecraft and third stage, and spacecraft/third stage interface verification is done, if required.

F-9 The payload handling can is assembled around the spacecraft/third stage, and handling-can transportation covers are installed. The can is placed on its trailer and its purge is set up.

F-8 Tasks include transportation to the launch site, erection and mating of the spacecraft/upper

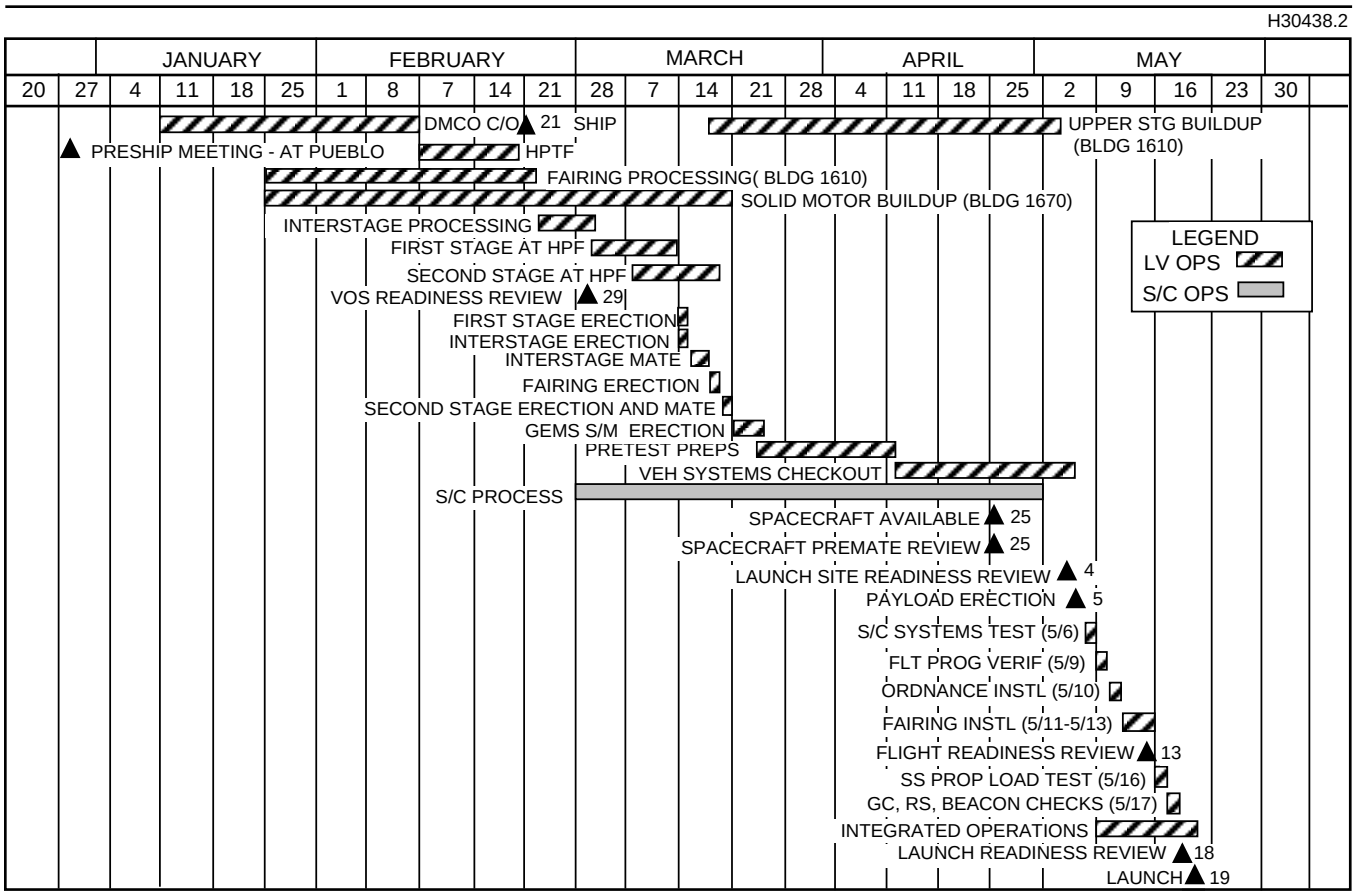

Figure 7-32. Typical Mission Plan

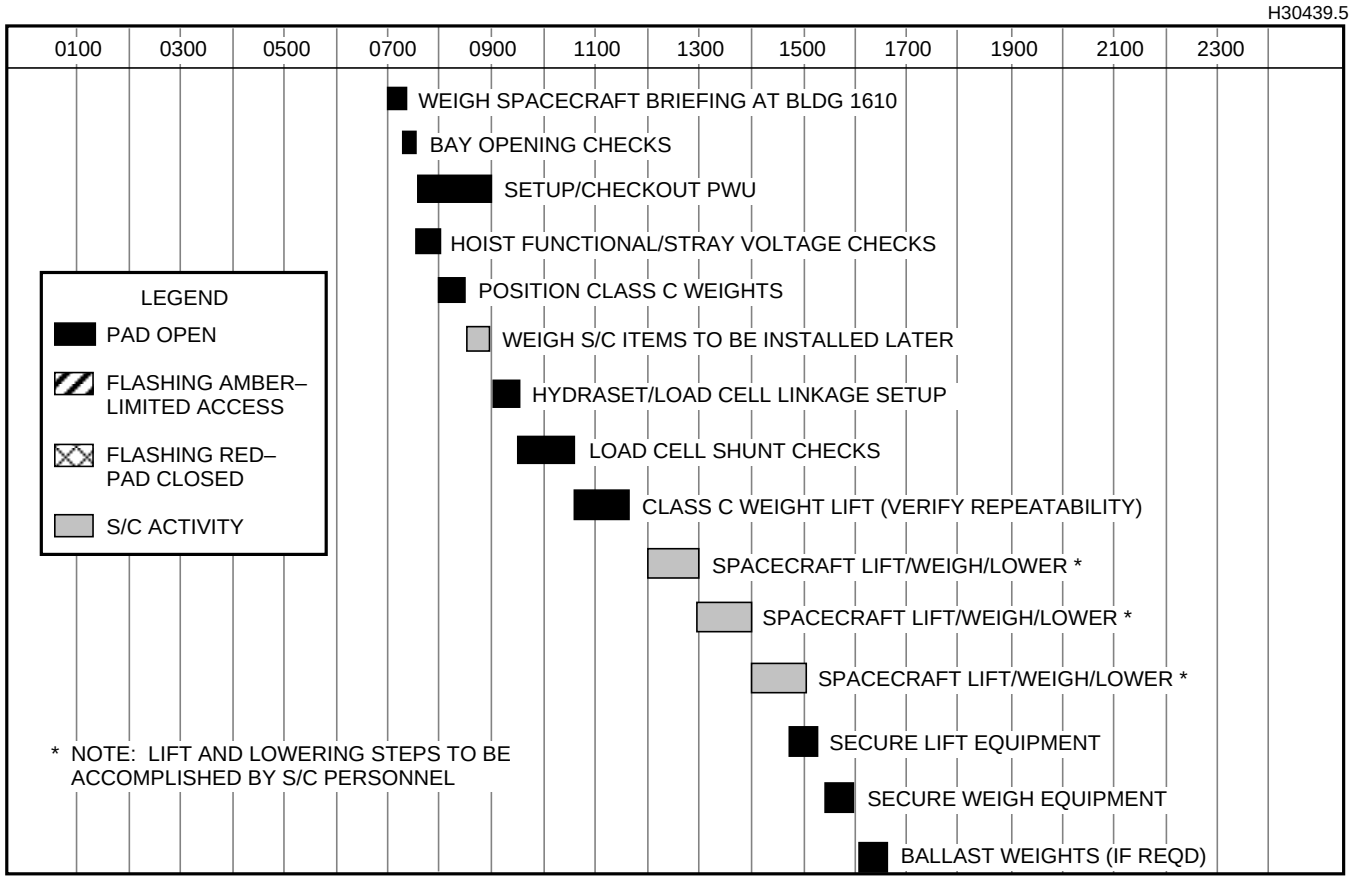

Figure 7-33. Typical Spacecraft Weighing (F-12 Day)

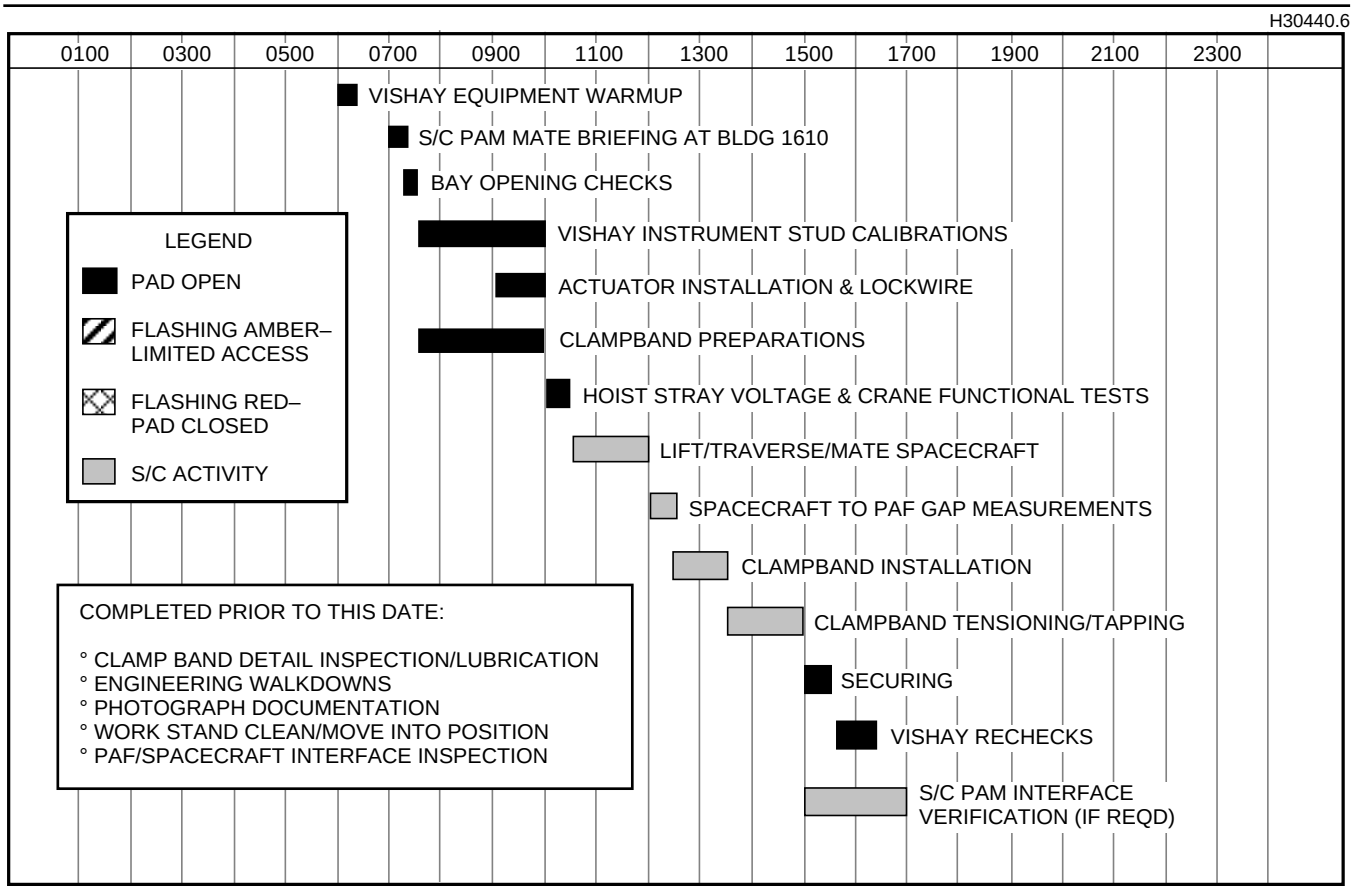

Figure 7-34. Typical Spacecraft/PAM Mate (F-11 Day)

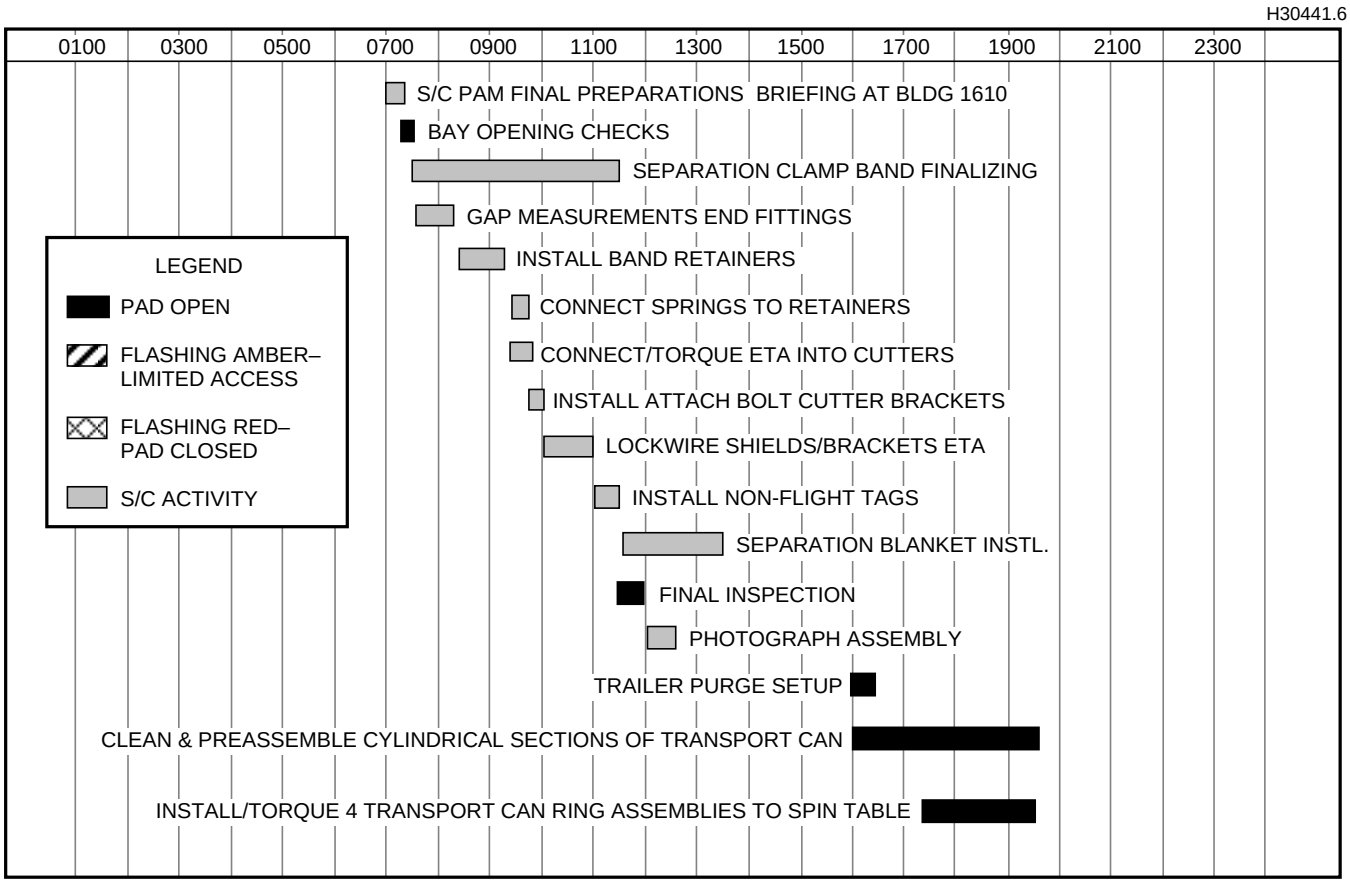

Figure 7-35. Typical Spacecraft/PAM Final Preparations (F-10 Day)

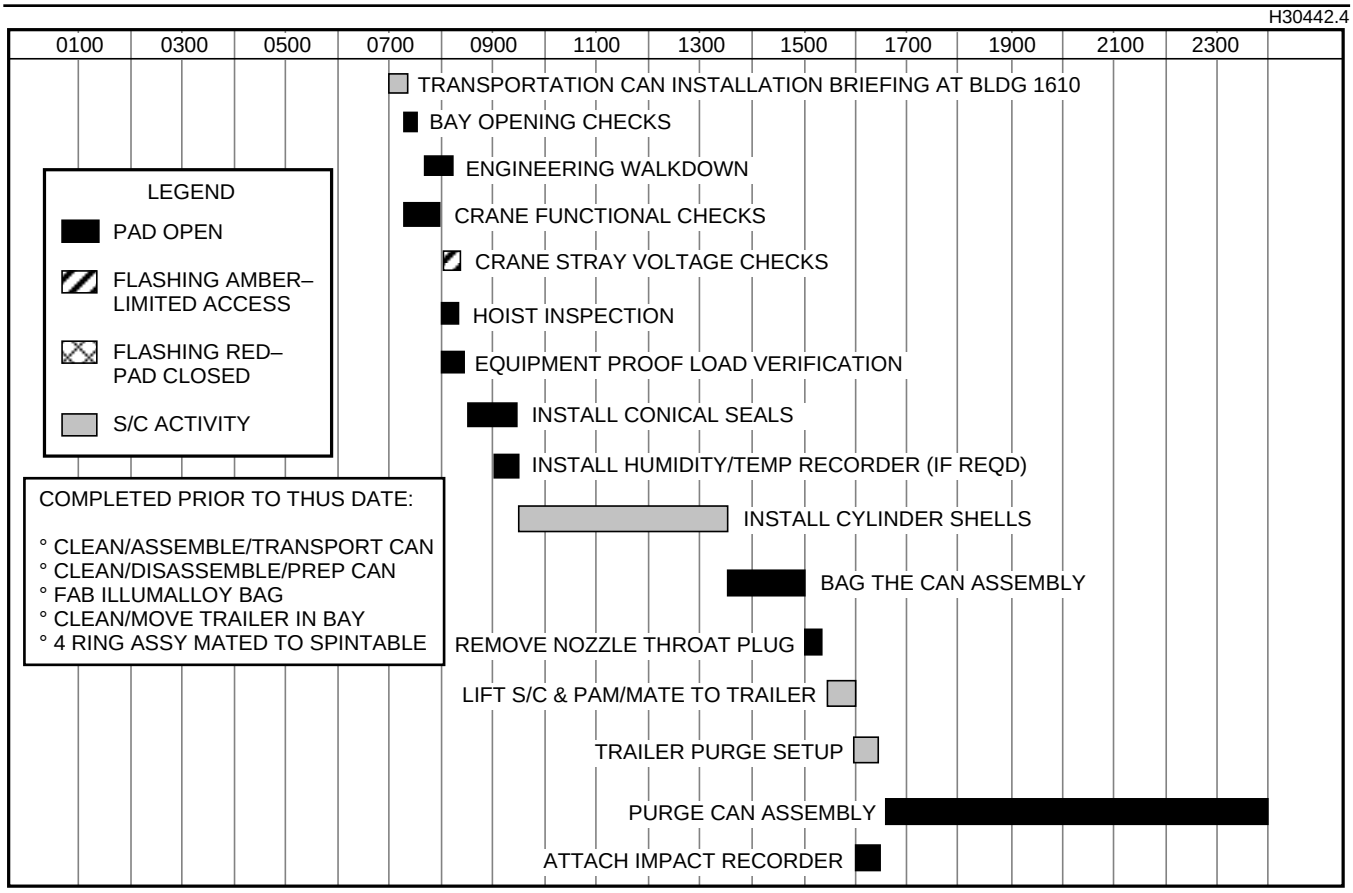

Figure 7-36. Typical Transportation Can Installation (F-9 Day)

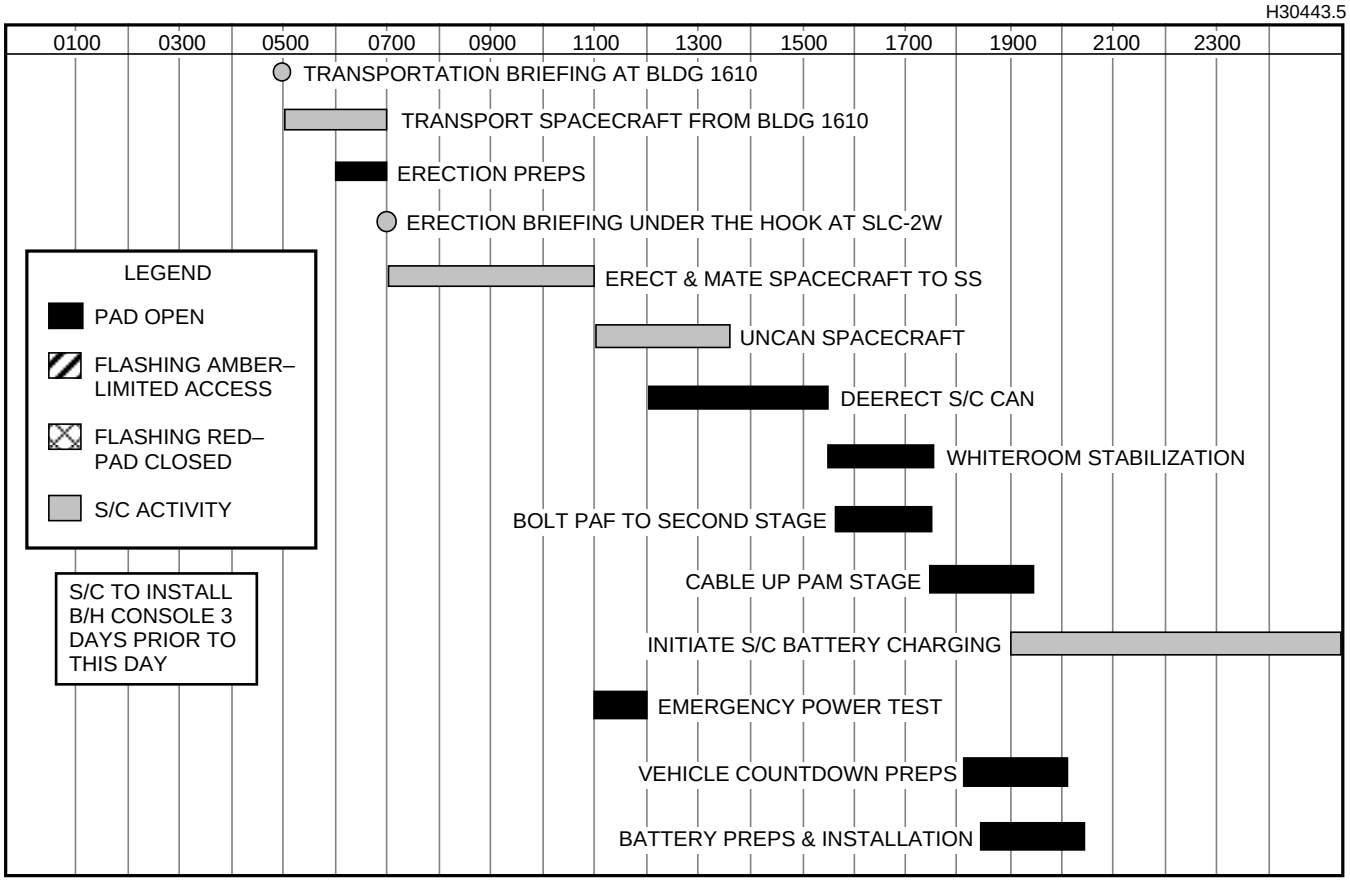

Figure 7-37. Typical Spacecraft Erection (F-8 Day)

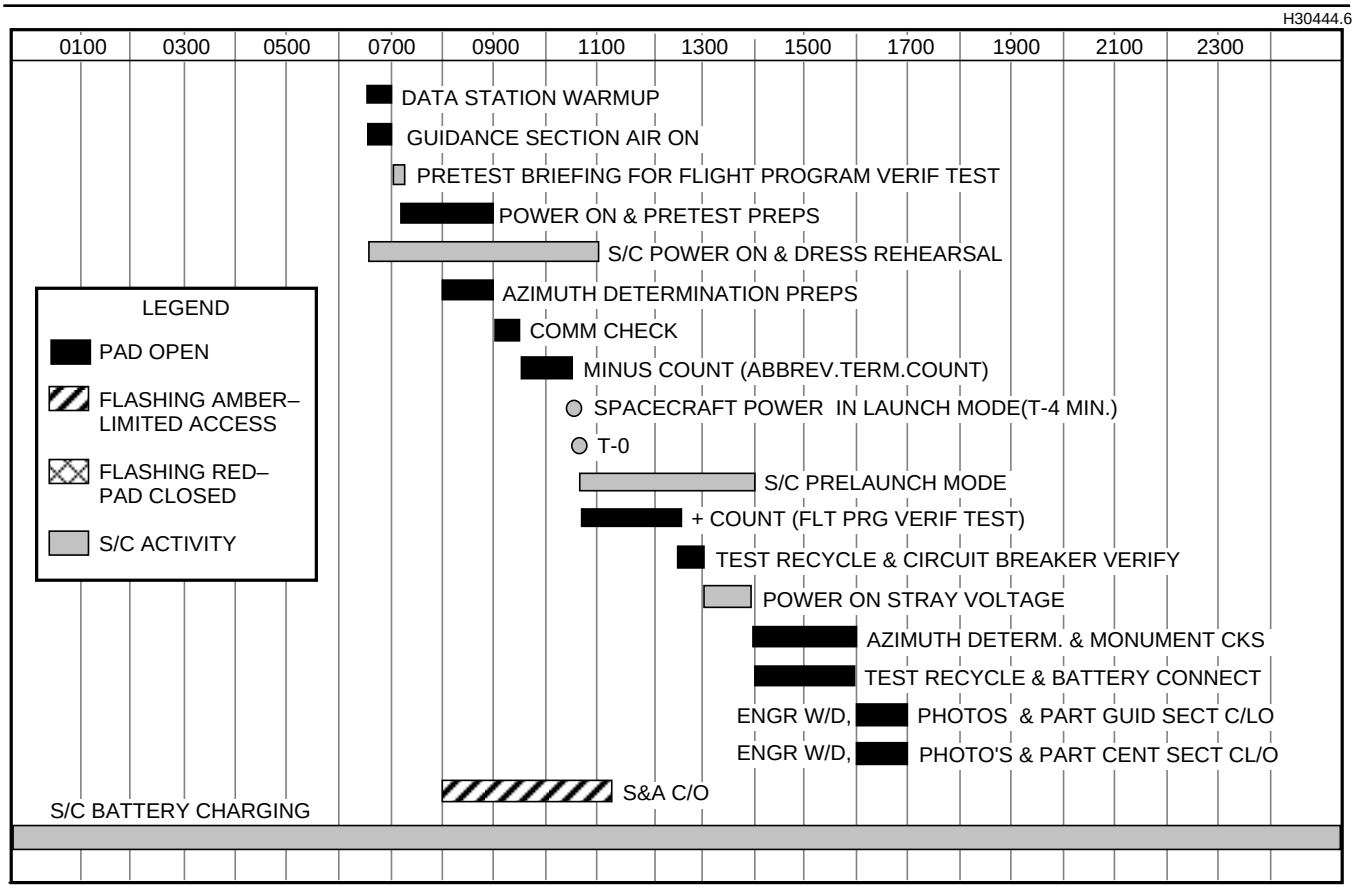

Figure 7-38. Typical Flight Program Verification and Safety Stray Voltage Checks (F-7 Day)

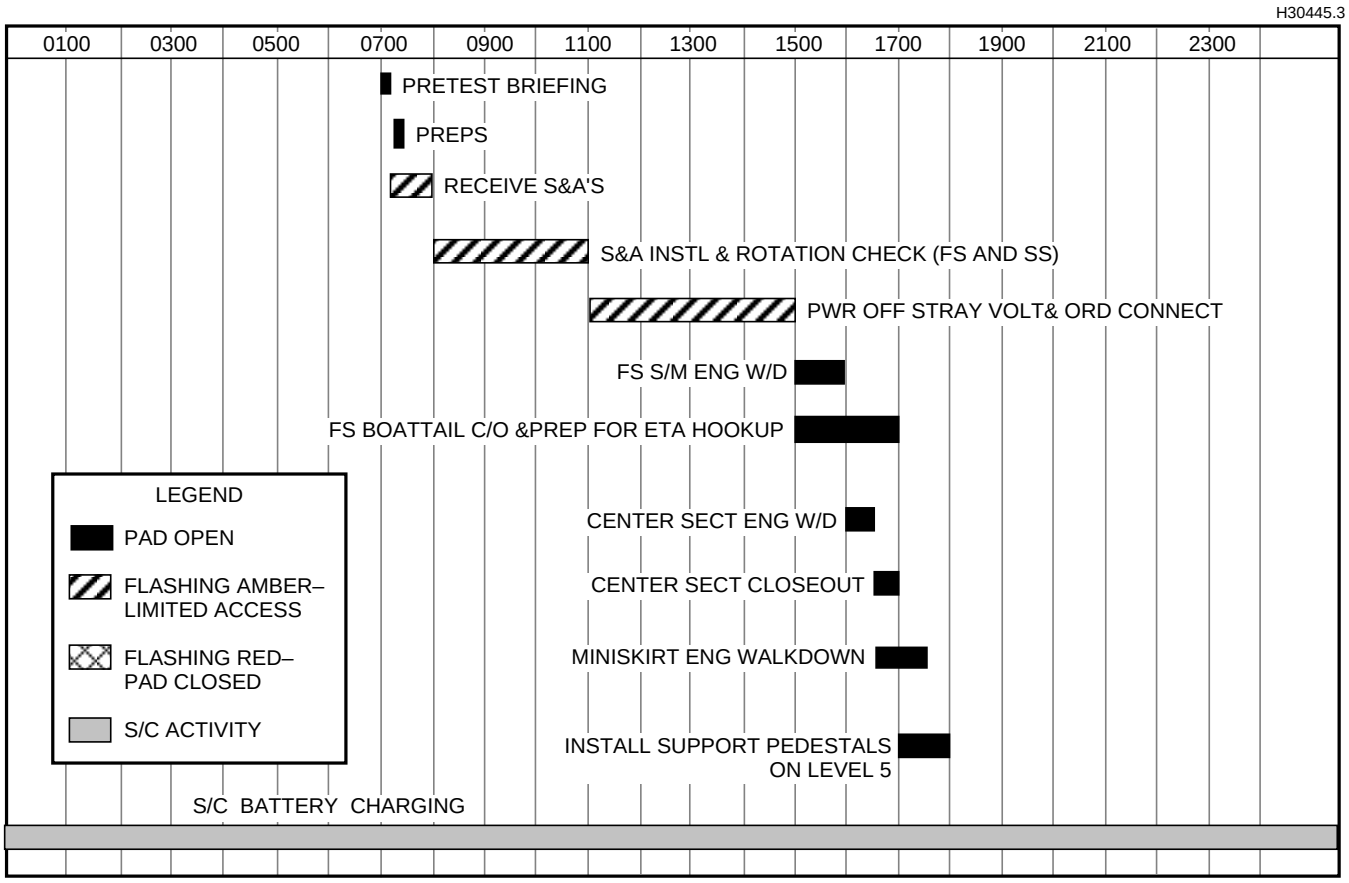

Figure 7-39. Typical Ordnance Installation (F-6 Day)

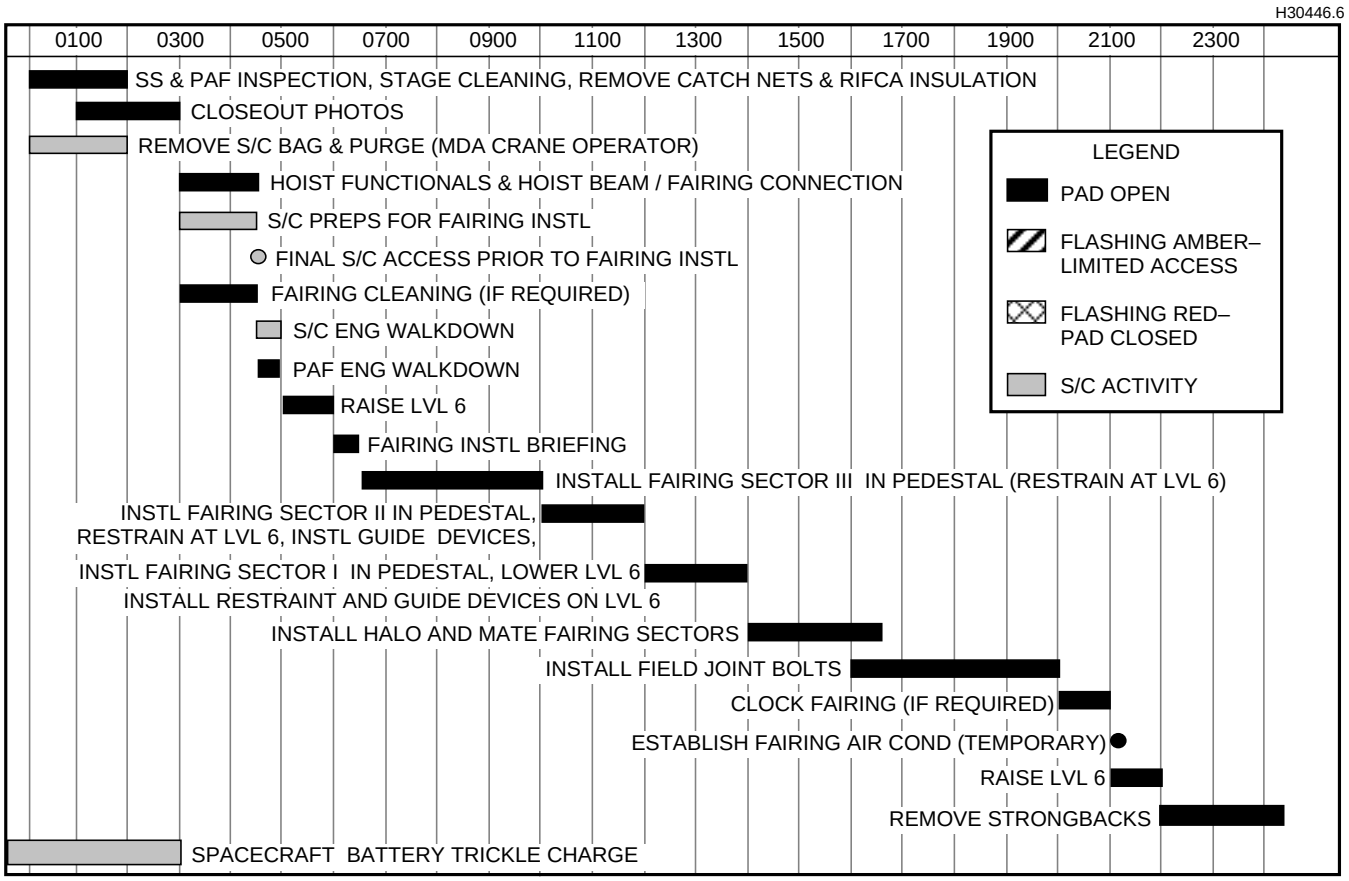

Figure 7-40. Typical Fairing Installation (F-5 Day)

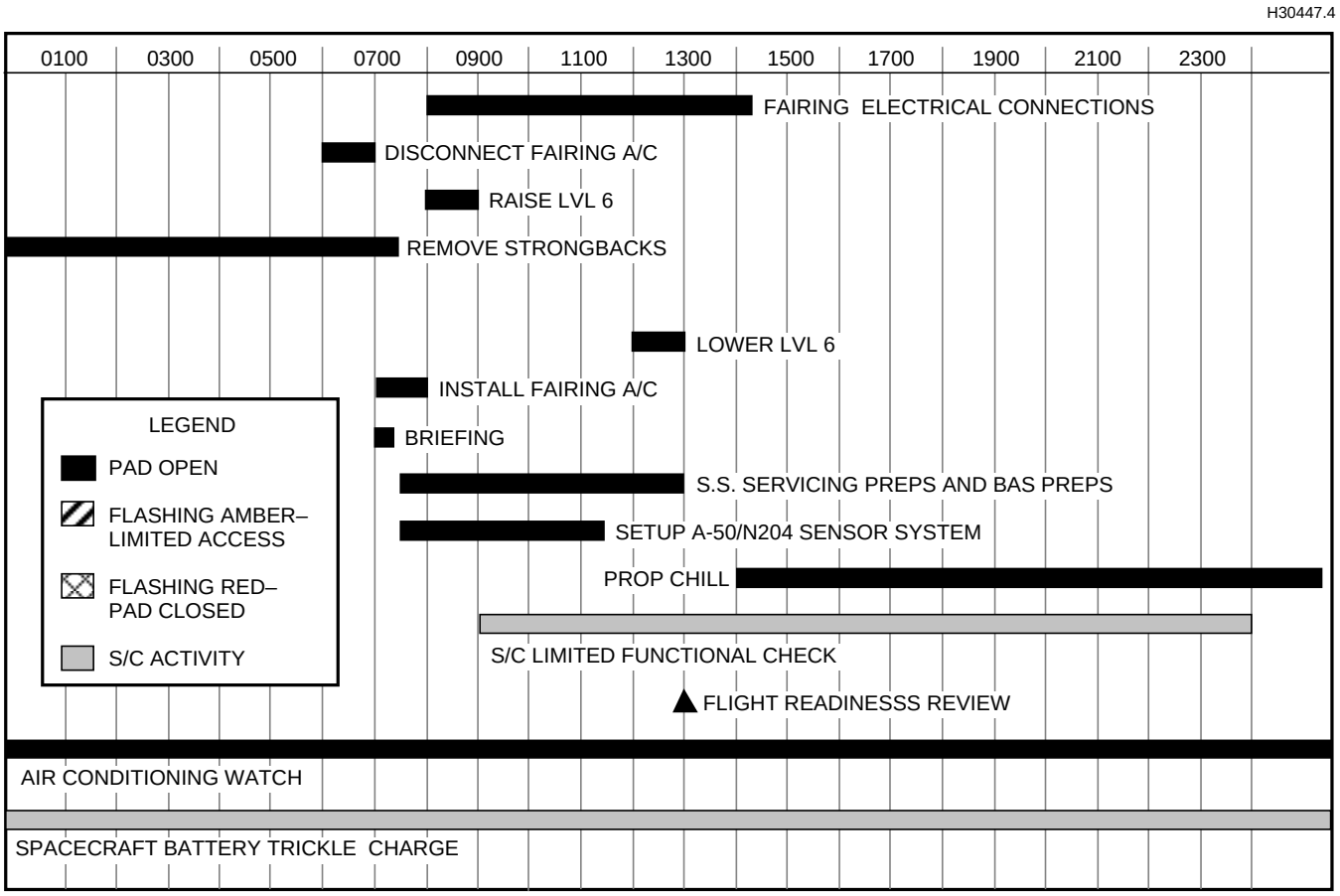

Figure 7-41. Typical Fairing Finaling (F-4 Day)

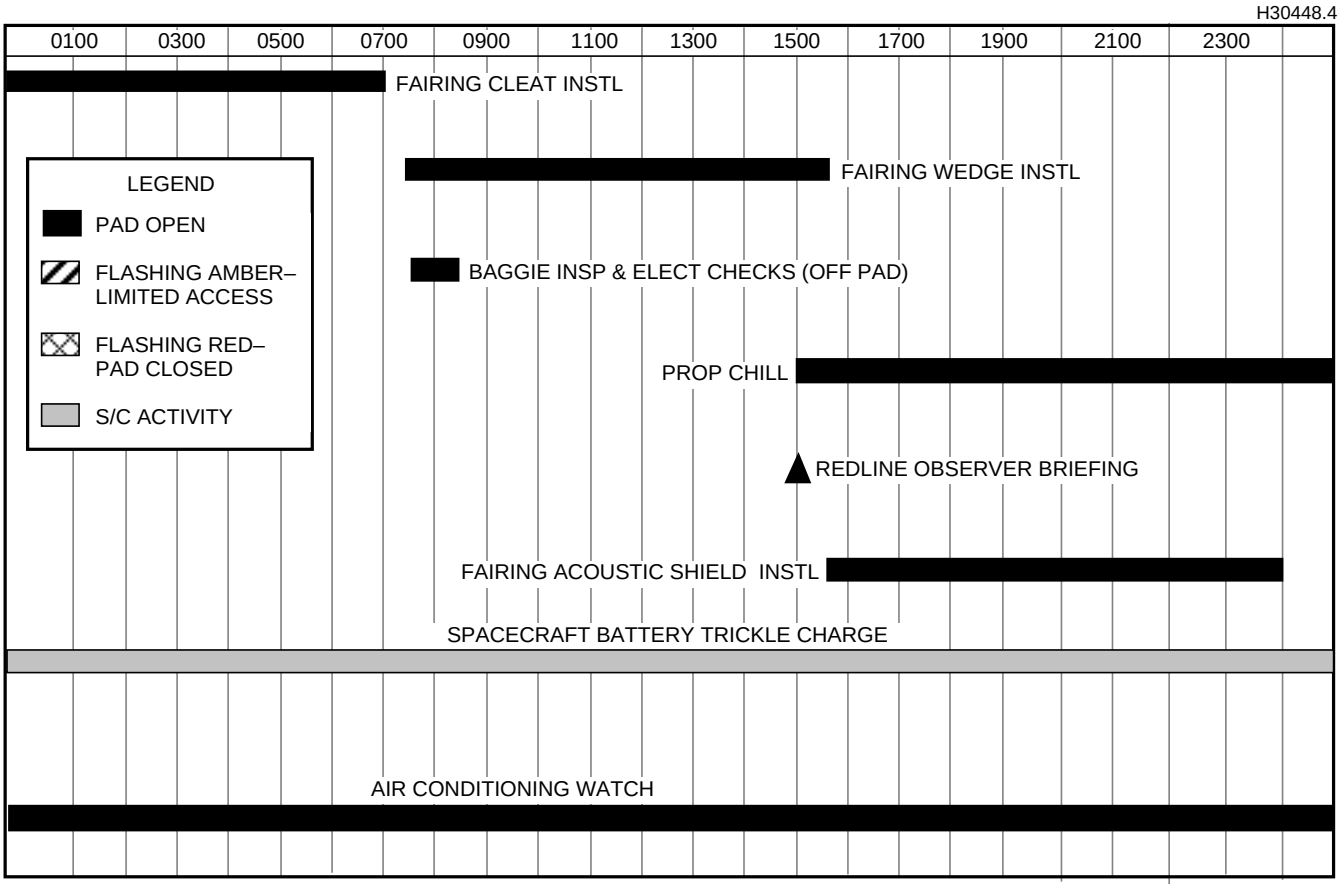

Figure 7-42. Typical Fairing Finaling (F-3 Day)

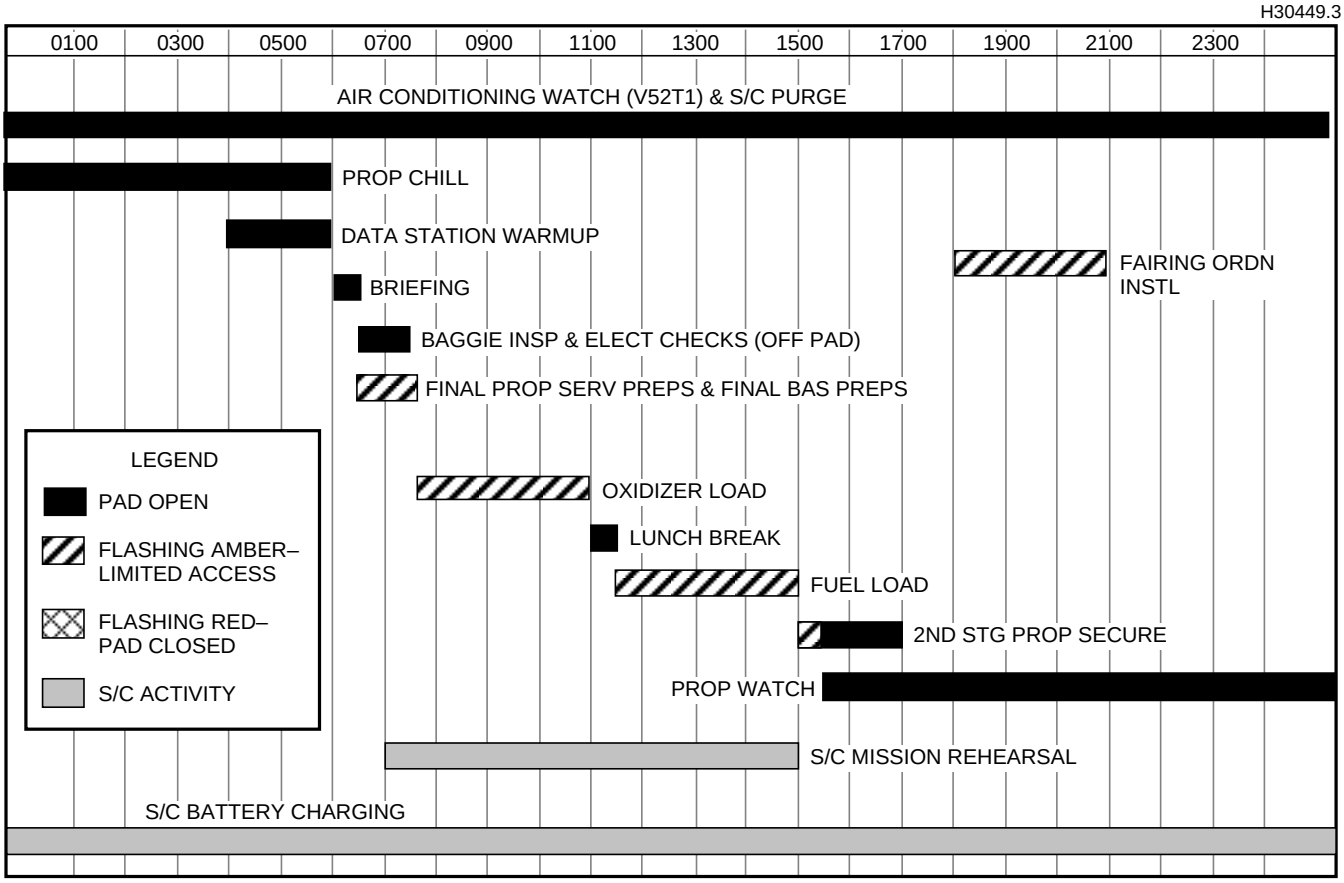

Figure 7-43. Typical Second-Stage Propellant Loading (F-2 Day)

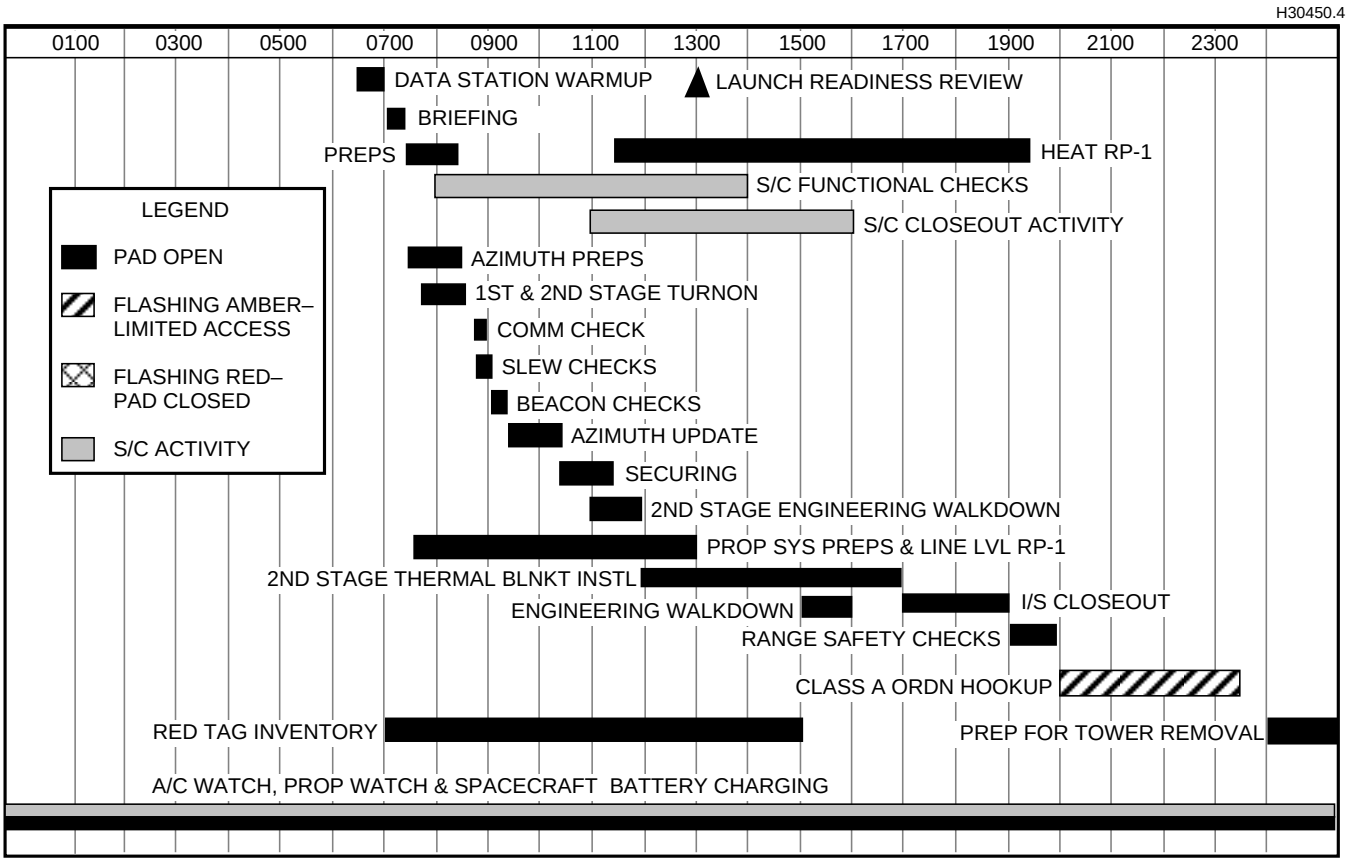

Figure 7-44. Typical Beacon, Range Safety, and Class A Ordnance (F-1 Day)

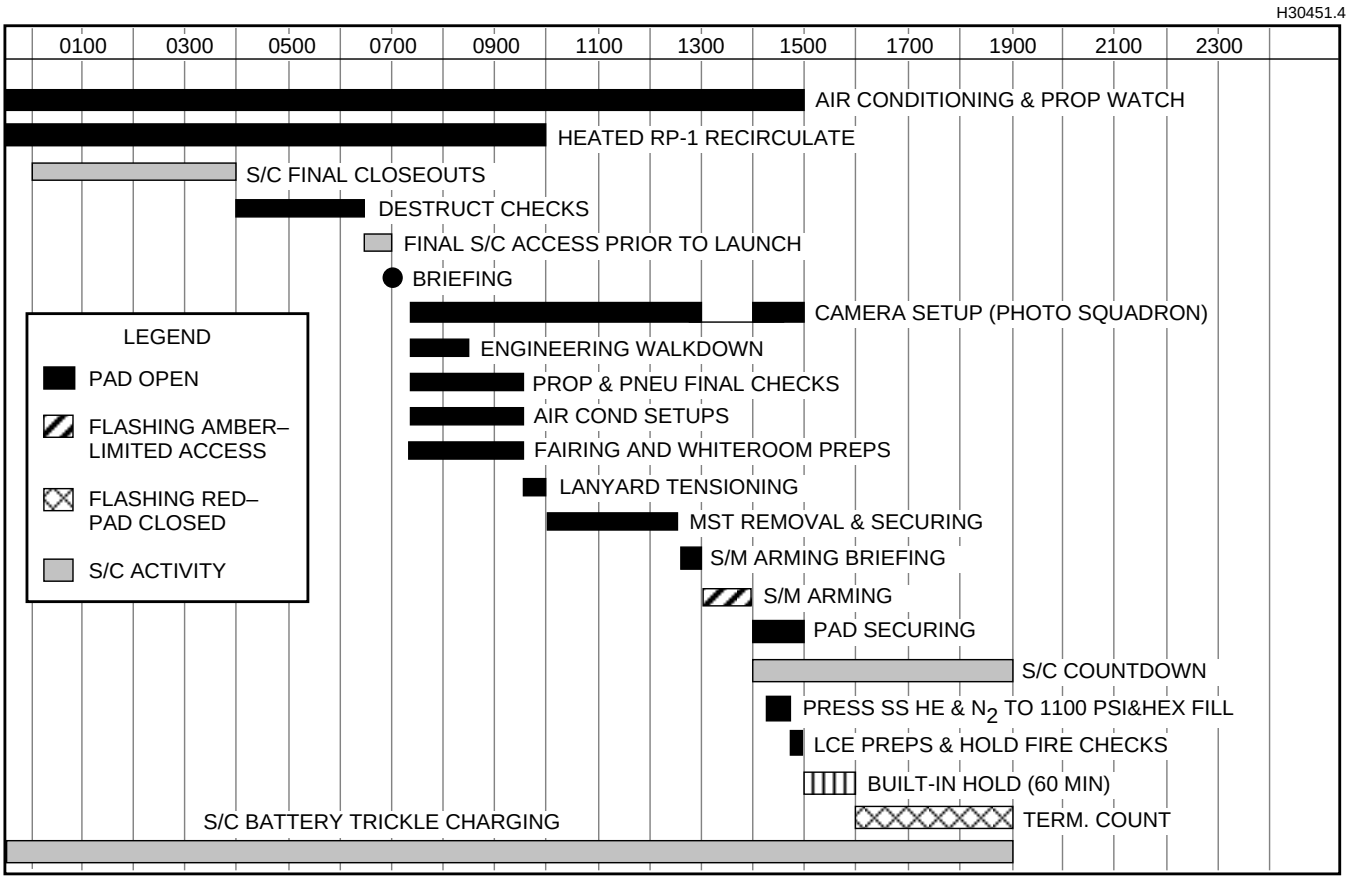

Figure 7-45. Typical Delta Countdown (F-0 Day)

stage to the Delta II vehicle in the MST cleanroom, and removal of the handling can from the tower.

F-7 The flight program verification test is performed, followed by the vehicle power-on stray voltage test. Spacecraft systems to be powered at liftoff are turned on during the flight program verification test and all data are monitored for electromagnetic interference (EMI) and radio frequency interference (RFI). All spacecraft systems that will be turned on at any time between F-7 day (stray voltage checks) and F-0 day (spacecraft separation) will be turned on in support of the vehicle power-on stray voltage test. Spacecraft support of these vehicle system tests is critical in meeting the scheduled launch date. They have priority over other spacecraft testing.

F-6 Tasks include Delta II vehicle ordnance installation/connection and preparation for fairing installation.

F-5, 4, 3 Spacecraft final preparations are made prior to fairing installation, including Delta II upper-stage closeout, preparations for second-stage propellant servicing, and fairing installation.

F-2 Propellant is loaded into the second stage, and fairing ordnance is installed.

F-1 Tasks include launch vehicle guidance turn-on, C-band beacon readout, guidance system azimuth update, range safety checks, class A ordnance arming, final fairing preparations for MST removal, second-stage engine closeout, launch vehicle final preparations, and preparations for tower removal.

F-0 Launch day preparations include final spacecraft closeouts and fairing door installation, gantry removal, final arming, terminal sequences, and launch. Spacecraft should be in launch configuration immediately prior to T-4 minutes and standing by for liftoff. The nominal hold and recycle point is T-4 minutes. Launch is typically scheduled for a Thursday.

7.6.3 Spacecraft Schedules

The spacecraft project will supply schedules to the MDA spacecraft coordinator, who will arrange support as required.

7.7 DELTA II MEETINGS AND REVIEWS

During the launch scheduling preparation, various meetings and reviews take place. Some of these will require user input while others allow the user to monitor the progress of the overall mission. The MDA spacecraft coordinator will ensure adequate user participation.

7.7.1 Meetings

Delta Status Meetings. Status meetings are generally held twice a week. They include a review of the activities scheduled and accomplished since the last meeting, a discussion of problems and their solutions, and a review of the mission schedule. Spacecraft representatives are encouraged to attend these meetings.

Daily Schedule Meetings. Daily schedule meetings are held to provide the team members with their assignments and to summarize the previous or current day's accomplishments. These meetings are attended by the launch conductor, technicians, inspectors, engineers, supervisors, and the spacecraft coordinator. Depending upon testing activities, these meetings are held at either the beginning or the end of the first shift.

7.7.2 Prelaunch Review Process

Periodic reviews are held to ensure that the spacecraft and launch vehicle are ready for launch. The Mission Plan (Figure 7-32) shows the relationship of the review to the program assembly and test flow.

The following paragraphs discuss the Delta II readiness reviews.

Postproduction Review. This meeting, conducted at Pueblo, Colorado, reviews the flight hardware at the end of production and prior to shipment to VAFB.

Mission Analysis Review. This review is held at Huntington Beach, California, approximately three months prior to launch to review mission specific drawings, studies, and analyses.

Pre-Vehicle-On-Stand (VOS) Review. This review is held at Huntington Beach subsequent to the completion of Delta mission checkout (DMCO), and prior to erection of the vehicle on the launch pad. It includes an update of the activities since Pueblo, the results of the DMCO processing, and any hardware history changes.

Launch Site Readiness Review (LSRR). This review is held prior to erection and mate of the upper stage and spacecraft. It includes an update of the activities since the pre-VOS review and verifies the readiness of the launch vehicle, third stage, launch facilities, and spacecraft for transfer of the spacecraft to the pad.

Flight Readiness Review (FRR). This review is an update of actuals since the Pre-VOS and is conducted to determine that checkout has shown that the launch vehicle and spacecraft are ready for countdown and launch. Upon completion of this meeting, authorization to proceed with the loading of second-stage propellants is given. This review also assesses the readiness of the range to support launch and provides a predicted weather status.

Launch Readiness Review (LRR). This review is held on L-1 day and all agencies and contractors are required to provide a ready-to-launch statement. Upon completion of this meeting, an okay to enter terminal countdown is given.

Section 8
SPACECRAFT INTEGRATION

This section describes the payload integration process, the supporting documentation required from the payload agency, and resulting analyses provided by McDonnell Douglas Aerospace.

8.1 INTEGRATION PROCESS

The integration process developed by MDA is designed to support the requirements of both the launch vehicle and the payload. We work closely with our customers to tailor the integration flow to meet their individual requirements. The integration process (Figure 8-1) encompasses the entire life of the launch vehicle/spacecraft integration activities. At its core is a streamlined series of documents, reports, and meetings that are flexible and adaptable to the specific requirements of each program.

Mission integration for commercial missions is the responsibility of the Delta Program Office which is located at the MDA facility in Huntington Beach, California. The prime objective of mission integration is to coordinate all interface activities required to launch commercial and government spacecraft via the Delta II launch vehicle. This objective includes reaching a customer-MDA interface agreement and accomplishing interface planning, coordinating, scheduling, control, and targeting.

The Delta Program Office assigns a mission integration manager to carry out interface activities. The mission integration manager develops a tailored integration planning schedule for the Delta II/spacecraft by defining the documentation and analysis required. The mission integration manager also synthesizes the spacecraft requirements and engineering design and analysis into a controlled mission specification that establishes agreed-to interfaces.

The integration manager ensures that all lines of communication function effectively. To this end,

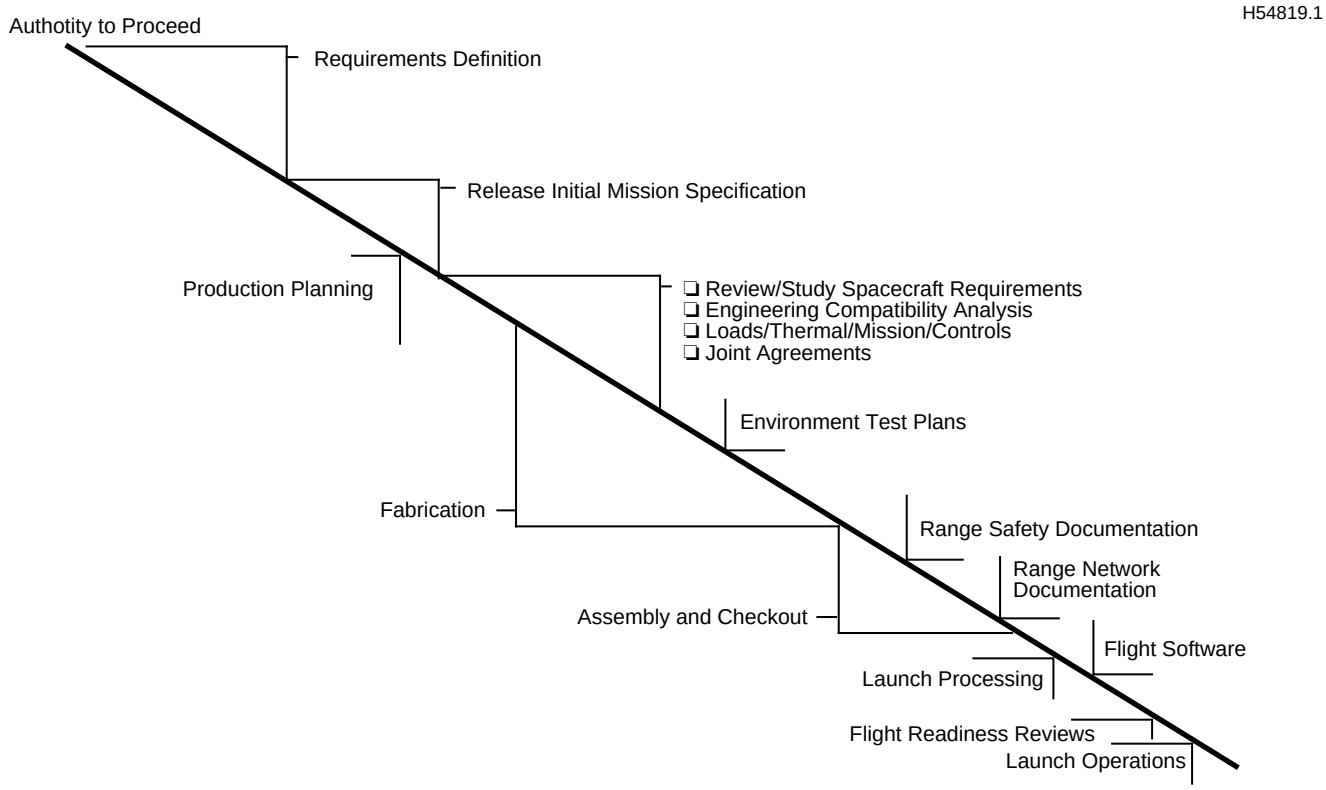

Figure 8-1. Mission Integration Process

all pertinent communications, including technical/administrative documentation, technical interchange meetings (TIM), and formal integration meetings, are coordinated through the Delta Program Office and executed in a timely manner. These data exchange lines not only exist between the user and MDA, but also include other agencies involved in Delta II launches. For NASA payloads, mission integration activities are co-chaired by NASA Goddard Space Flight Center (GSFC) Orbital Launch Services (OLS) and MDA. NASA OLS will assign a mission integration manager to act as the point of contact for the government. Figure 8-2 shows the typical relationships among agencies involved in a Delta mission.

8.2 DOCUMENTATION

Effective integration of the spacecraft into the Delta launch system requires the diligent and timely preparation and submittal of required documentation. When submitted, these documents represent the primary communication of requirements, safety data, system descriptions, etc., to each of the several support agencies. The Delta Program Office acts as the administrative interface for proper documentation and flow. All data, formal and informal, are routed through this office. Relationships of the various categories of documentation are shown in Figure 8-3.

A general model for Delta Launch Vehicle and spacecraft documentation requirements is shown in

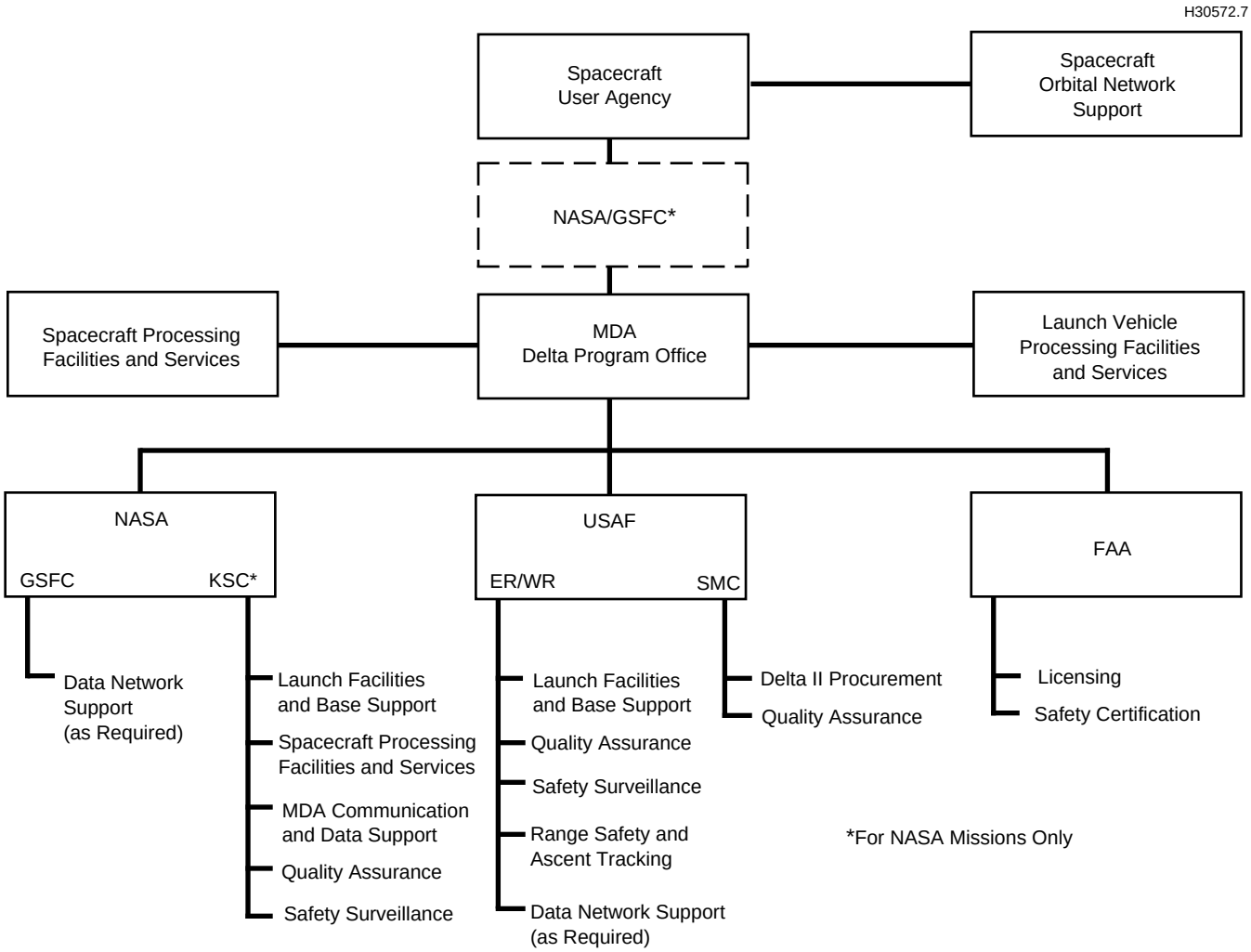

Figure 8-2. Typical Delta II Agency Interfaces

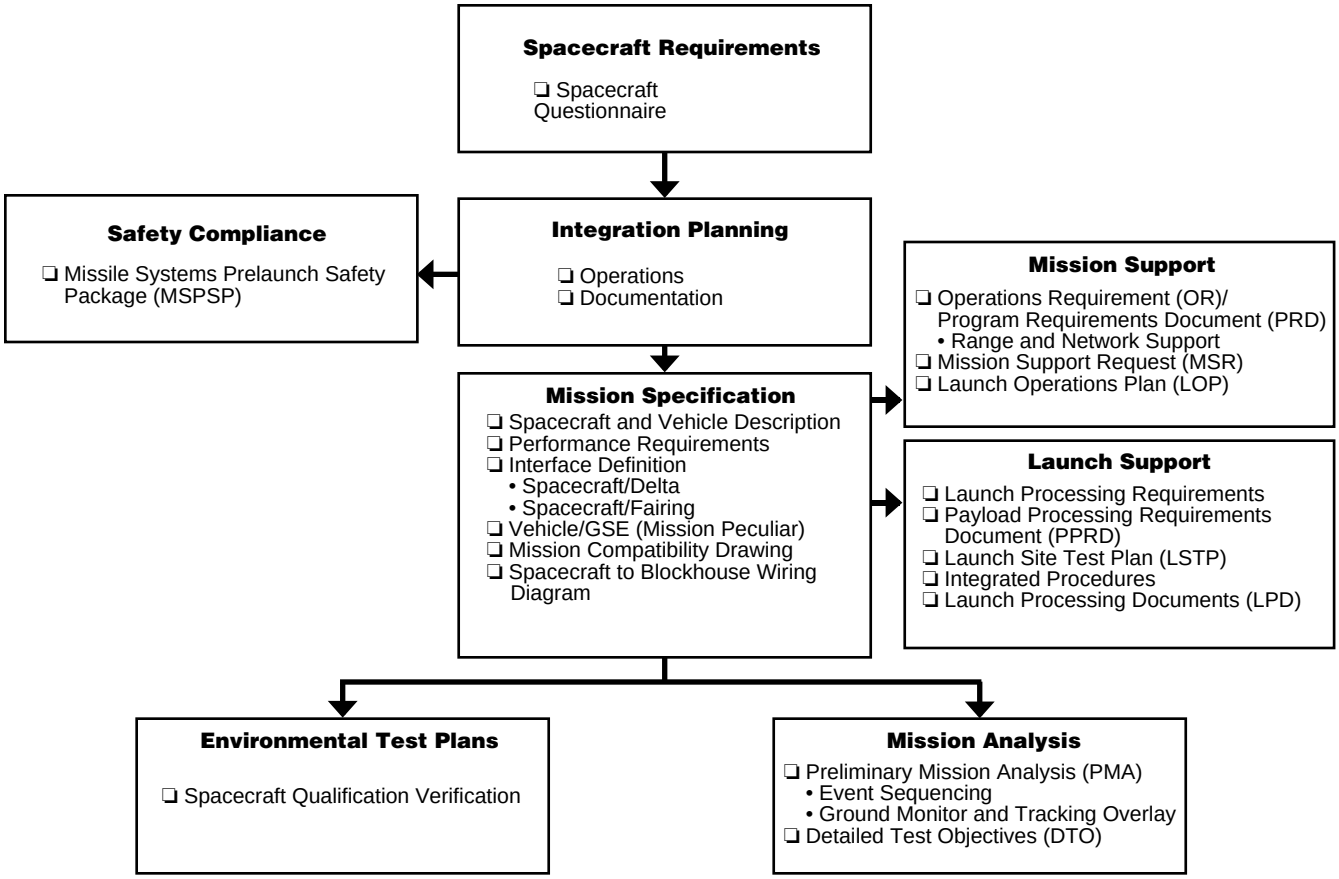

Figure 8-3. Typical Document Interfaces

Tables 8-1 and 8-2, and Table 8-3 describes the documents identified. Specific schedules are established by agreement with each customer. The Spacecraft Questionnaire shown in Table 8-4 is to be completed by the spacecraft agency at least 2 years prior to launch to provide an initial definition of spacecraft characteristics. Table 8-5 is an outline of a typical spacecraft launch-site test plan that describes the launch site activities and operations expected in support of the mission. Orbit data at burnout of the final stage is needed to reconstruct the performance of the Delta following the mission. A complete set of orbital elements and associated estimates of 3σ accuracy required to reconstruct this performance is presented in Table 8-6, Data Required for Orbit Parameter Statement.

A typical integration planning schedule is shown in Figure 8-4. Each data item in Figure 8-4 has an associated L-date (weeks before launch). The responsible party for each data item is identified. Close coordination with the Delta mission integration manager is required to provide proper planning of the integration documentation.

8.3 LAUNCH OPERATIONS PLANNING

The development of launch operations, range support, and other support requirements is an evolutionary process that requires timely inputs and continued support from the spacecraft agency. The relationship and submittal schedules of key controlling documents are shown in Figure 8-5.

8.4 SPACECRAFT PROCESSING REQUIREMENTS

The checklist shown in Table 8-7 is provided to assist the user in identifying the requirements at

Table 8-1. Spacecraft Agency Data Requirements

Description	Table 8-3 reference	Nominal Due weeks – or + launch
Spacecraft Questionnaire	2	L-104
FAA License Information	2	L-104
Spacecraft Mathematical Model	3	L-90
Spacecraft Environmental Test Documents	5	L-84
Mission Specification Comments	4	30 days after receipt
Electrical Wiring Requirements	7	L-80
Spacecraft Drawings (Init/Final)	18	L-78/L-44
Fairing Requirements	8	L-68
Radio Frequency Applications Inputs	10	L-58
Spacecraft–Missile System Prelaunch Safety Package (MSPSP)	9	L-58
PMA–Preliminary Mission Analysis Requirements/Comments	11	L-54/L-39
Mission Operational and Support Requirements for Spacecraft	12, 13	L-52
Payload Processing Requirements Document Inputs	14	L-52
Spacecraft-to-Blockhouse Wiring Diagram Review	29	L-40
DTO–Detailed Test Objectives Requirements	17	L-39
Launch Window (Initial/Final)	16	L-39, L-4
Vehicle Launch Insignia	15	L-39
Spacecraft Launch Site Test Plan	19	L-34
Spacecraft Compatibility Drawing Comments	18	L-29
Combined Spacecraft/Third-Stage Nutation Time Constant and Mass Properties Statement (Initial/Final)	22	L-54/L-20
Spacecraft Integrated Test Procedures	21	L-20
Spacecraft Launch Site Test Procedures	20	L-18
Spacecraft Environments and Loads Test Report	5	L-18
Mission Operational and Support Requirements	12	L-12
Postlaunch Orbit Confirmation Data	28	L+1

each processing facility. The requirements identified are submitted to MDA for the PRD. MDA coordinates with CCAS/KSC, Astrotech, California Spaceport, or VAFB/KSC as appropriate and implements the requirements through the PRD/PPRD. The user may add items to the list. Please note that most requirements for assembly and checkout of commercial spacecraft will be met at the Astrotech or California Spaceport facility.

Table 8-2. MDA Program Documents

Description	Table 8-3 reference	Nominal Due weeks – or + launch
Mission Specification (Initial)	4	L-84
Coupled Dynamic Loads Analysis	6	L-68
Spacecraft-to-Blockhouse Wiring Diagram (Prel/Final)	29	L-50, L-24
Preliminary Mission Analysis (PMA)	11	L-44
Payload Processing Requirements Document	14	L-39
Spacecraft Compatibility Drawing	18	L-36, L-17
Detailed Test Objective (DTO)	17	L-28
Spacecraft-Fairing Clearance Drawing	18	L-27
Launch Site Procedures	–	L-15
Integrated Countdown Schedule	–	L-15
Nutation Control System Analysis	23	L-15
Spacecraft Separation Analysis	25	L-12
Launch Operations Plan	26	L-4
VIM—Vehicle Information Memorandum	27	L-3

M029, T030-,9/22/95 , 09 :21 AM

Table 8-3. Required Documents

	Item	Responsibility
1.	**Feasibility Study (Optional)** A feasibility study may be necessary to define the launch vehicle's capabilities for a specific mission or to establish the overall feasibility of using the vehicle for performing the required mission. Typical items that may necessitate a feasibility study are (1) a new flight plan with unusual launch azimuth or orbital requirements; (2) a precise accuracy requirement or a performance requirement greater than that available with the standard vehicle; and (3) spacecraft that impose uncertainties with regard to vehicle stability. Specific tasks, schedules, and responsibilities are defined before study initiation, and a final report is prepared at the conclusion of the study.	MDA
2.	**Spacecraft Questionnaire** The Spacecraft Questionnaire (Table 8-4) is the first step in the process and is designed to provide the initial definition of spacecraft requirements, interface details, launch site facilities, and preliminary safety data to Delta's various agencies. It contains a set of questions whose answers define the requirements and interfaces as they are known at the time of preparation. The questionnaire is required not later than 2 years prior to launch. A definitive response to some questions may not be possible because many items are defined at a later date. Of particular interest are answers that specify requirements in conflict with constraints specified herein. Normally this document would not be kept current; it will be used to create the initial issue of the Mission Specification (Item 4) and in support of our Federal Aviation Administration (FAA) launch permit. The specified items are typical of the data required for Delta II missions. The spacecraft agency is encouraged to include other pertinent information regarding mission requirements or constraints.	Spacecraft agency
3	**Spacecraft Mathematical Model for Dynamic Analysis** A spacecraft mathematical model is required for use in a coupled loads analysis. Acceptable forms include (1) a discrete math model with associated mass and stiffness matrices or (2) a constrained normal mode model with modal mass and stiffness and the appropriate transformation matrices to recover internal responses. Required model information such as specific format, degree of freedom requirements, and other necessary information will be supplied.	Spacecraft agency
4.	**Mission Specification** The MDA Mission Specification functions as the Delta launch vehicle interface control document and describes all mission-specific requirements. It contains the spacecraft description, spacecraft-to-blockhouse wiring diagram, compatibility drawing, targeting criteria, special spacecraft requirements affecting the standard launch vehicle, description of the mission-specific vehicle, a description of special AGE and facilities MDA is required to furnish, etc. The document is provided to spacecraft agencies for review and concurrence and is revised as required. The initial issue is based upon data provided in the Spacecraft Questionnaire and is provided approximately 84 weeks before launch. Subsequent issues are published as requirements and data become available. The mission peculiar requirements documented in the Mission Specification along with the standard interfaces presented in this manual define the spacecraft to launch vehicle interface.	MDA (input required from user)
5.	**Spacecraft Environmental Test Documents** The environmental test plan documents the spacecraft contractor's approach for qualification and acceptance (preflight screening) tests. It is intended to provide general test philosophy and an overview of the system-level environmental testing to be performed to demonstrate adequacy of the spacecraft for flight (e.g., static loads, vibration, acoustics, shock). The test plan should include test objectives, test specimen configuration, general test methods, and a schedule. It should not include detailed test procedures. Following the system-level structural loads and dynamic environment testing, test reports documenting the results shall be provided to MDA. These reports should summarize the testing performed to verify the adequacy of spacecraft structure for the flight loads. For structural systems not verified by test, a structural loads analysis report documenting the analyses performed and resulting margins of safety should be provided to MDA.	Spacecraft agency
6.	**Coupled Dynamic Loads Analysis** A coupled dynamic loads analysis is performed in order to define flight loads to major vehicle and spacecraft structure. The liftoff event, which generally causes the most severe lateral loads in the spacecraft, and the period of transonic flight and maximum dynamic pressure, causing the greatest relative deflections between spacecraft and fairing, are generally included in this analysis. Output for each flight event includes tables of maximum acceleration at selected nodes of the spacecraft model as well as a summary of maximum interface loads. Worst-case spacecraft-fairing dynamic relative deflections are included. Close coordination between the user and the Delta Program Office is essential in order to decide on the output format and the actual work schedule for the analysis.	MDA (input required from user, Item 3)

Table 8-3. Required Documents (Continued)

Item	Responsibility
7. Electrical Wiring Requirements The wiring requirements for the spacecraft to the blockhouse and the payload processing facilities are needed as early as possible. Section 5 lists the Delta capabilities and outlines the necessary details to be supplied. MDA will provide a spacecraft-to-blockhouse wiring diagram based on the spacecraft requirements. It will define the hardware interface from the spacecraft to the blockhouse for control and monitoring of spacecraft functions after spacecraft installation in the launch vehicle. Close attention to the documentation schedule is required so that production checkout of the launch vehicle includes all of the mission-specific wiring. Any requirements for the payload processing facilities are to be furnished with the blockhouse information.	Spacecraft agency
8. Fairing Requirements Early spacecraft fairing requirements should be addressed in the questionnaire and updated in the Mission Specification. Final spacecraft requirements are needed to support the mission-specific fairing modifications during production. Any in-flight requirements, ground requirements, critical spacecraft surfaces, surface sensitivities, mechanical attachments, RF transparent windows, and internal temperatures on the ground and in flight must be provided.	Spacecraft agency
9. Missile System Prelaunch Safety Package (MSPSP) (Refer to EWR 127-1 for specific spacecraft safety regulations.) To obtain approval to use the launch site facilities and resources and for launch, a MSPSP must be prepared and submitted to the Delta Program Office. The MSPSP includes a description of each hazardous system (with drawings, schematics, and assembly and handling procedures, as well as any other information that will aid in appraising the respective systems) and evidence of compliance with the safety requirements of each hazardous system. The major categories of hazardous systems are ordnance devices, radioactive material, propellants, pressurized systems, toxic materials and cryogenics, and RF radiation. The specific data required and suggested formats are discussed in Section 2 of EWR 127-1. MDA will provide this information to the appropriate government safety offices for their approval.	Spacecraft agency
10. Radio Frequency Applications The spacecraft agency is required to specify the RF transmitted by the spacecraft during ground processing and launch intervals. A RF data sheet specifying individual frequencies will be provided. Names and qualifications are required covering spacecraft user personnel who will operate spacecraft RF systems. Transmission frequency bandwidths, frequencies, radiated durations, wattage etc., will be provided. MDA will provide these data to the appropriate range/government agencies for approval.	Spacecraft agency
11. Preliminary Mission Analysis (PMA) This analysis is normally the first step in the mission planning process. It uses the best available mission requirements (spacecraft weight, orbit requirements, tracking requirements, etc.) and is primarily intended to uncover and resolve any unusual problems inherent in accomplishing the mission objectives. Specifically, information pertaining to vehicle environment, performance capability, sequencing, and orbit dispersion is presented. Parametric performance and accuracy data are usually provided to assist the user in selection of final mission orbit requirements. The orbit dispersion data are presented in the form of variations of the critical orbit parameters as functions of probability level. A covariance matrix and a trajectory printout are also included. The mission requirements and parameter ranges of interest for parametric studies are due as early as possible but in no case later than 54 weeks before launch. Comments to the PMA are needed no later than launch minus 39 weeks for start of the DTO (Item 17).	MDA (input required from user)
12. Mission Operational and Support Requirements To obtain unique range and network support, the spacecraft agency must define any range or network requirements appropriate to its mission and then submit them to MDA. Spacecraft agency operational configuration, communication, tracking, and data flow requirements are required to support document preparation and arrange required range support.	Spacecraft agency
13. Program Requirements Documents (PRD) To obtain range and network support, a spacecraft PRD must be prepared. This document consists of a set of preprinted standard forms (with associated instructions) that must be completed. The spacecraft agency will complete all forms appropriate to its mission and then submit them to MDA. MDA will compile, review, provide comments, and, upon comment resolution, forward the spacecraft PRD to the appropriate support agency for formal acceptance.	MDA (input required from user)

Table 8-3. Required Documents (Continued)

Item	Responsibility
14. Payload Processing Requirements Documents (PPRD) The PPRD is prepared if commercial facilities are to be used for spacecraft processing. The spacecraft agency is required to provide data on all spacecraft activities to be performed at the commercial facility. This includes detailed information of all facilities, services, and support requested by MDA to be provided by the commercial facility. Spacecraft hazardous systems descriptions shall include drawings, schematics, summary test data, and any other available data that will aid in appraising the respective hazardous system. The commercial facility will accept spacecraft ground operations plans and/or MSPSP data for the PPRD.	Spacecraft agency
15. Launch Vehicle Insignia The spacecraft customer is entitled to have a mission-specific insignia placed on the launch vehicle. The customer will submit the proposed design to MDA not later than 9 months before launch for review and approval. Following approval, MDA will have the flight insignia prepared and placed on the launch vehicle. The maximum size of the insignia is 2.4 by 2.4 m (8 by 8 ft). The insignia is placed on the uprange side of the launch vehicle.	Spacecraft agency
16. Launch Window The spacecraft agency is required to specify the maximum launch window for any given day. Specifically the window opening time (to the nearest minute) and the window closing time (to the nearest minute) are to be specified. This final window data should extend for at least 2 weeks beyond the scheduled launch date. Liftoff is targeted to the specified window opening.	Spacecraft agency
17. Detailed Test Objectives (DTO) Report MDA will issue a DTO trajectory report that provides the mission reference trajectory. The DTO contains a description of the flight objectives, the nominal trajectory printout, a sequence of events, vehicle attitude rates, spacecraft and vehicle tracking data, and other pertinent information. The trajectory is used to develop mission targeting constants and represents the flight trajectory. The DTO will be available at launch minus 28 weeks.	MDA (input required from user)
18. Spacecraft Drawings Spacecraft configuration drawings are required as early as possible. The drawings should show nominal and worst-case (maximum tolerance) dimensions for the MDA-prepared compatibility drawing, clearance analysis, fairing compatibility, and other interface details. Preliminary drawings are desired with the Spacecraft Questionnaire but no later than 78 weeks prior to launch. The drawings should be 0.20 scale for 9.5- and 10-ft diameter fairings. The drawings should be supplied on vellum or mylar and rolled. The capability exists for CAD drawing use. Details should be worked through the Delta Program Office.	Spacecraft agency
MDA will prepare and release the spacecraft compatibility drawing that will become part of the Mission Specification. This is a working drawing that identifies spacecraft to launch vehicle interfaces. It defines electrical interfaces; mechanical interfaces, including spacecraft-to-PAF separation plane, separation springs and spring seats, and separation switch pads; definition of stay-out envelopes, both internal and external to the PAF; definition of stay-out envelopes within the fairing; and location and mechanical activation of spring seats. The user agency reviews the drawing and provides comments, and upon comment resolution and incorporation of the final spacecraft drawings, the compatibility drawing is formally accepted as a controlled interface between MDA and the spacecraft agency. In addition, MDA will provide a worst-case spacecraft-fairing clearance drawing.	MDA
19. Spacecraft Launch Site Test Plan To provide all agencies with a detailed understanding of the launch site activities and operations planned for a particular mission, the spacecraft agency is required to prepare a Launch Site Test Plan. The plan is intended to describe all aspects of the program while at the launch site. A suggested format is shown in Table 8-5.	Spacecraft agency
20. Spacecraft Launch Site Test Procedures Operating procedures must be prepared for all operations that are accomplished at the launch site. For those operations that are hazardous in nature (either to equipment or to personnel), special instructions must be followed in preparing the procedures. Refer to Section 9.	Spacecraft agency

Table 8-3. Required Documents (Continued)

Item	Responsibility
21. Spacecraft Integrated Test Procedure Inputs On each mission, MDA prepares launch site procedures for various operations that involve the spacecraft after it is mated with the Delta upper stage. Included are requirements for operations such as spacecraft weighing, spacecraft installation to third stage and into the handling can, spacecraft transportation to the launch complex, spacecraft hoisting into the white room, handling-can removal, spacecraft/third stage mating to launch vehicle, fairing installation, flight program verification test, and launch countdown. MDA requires inputs to these operations in the form of handling constraints, environmental constraints, personnel requirements, equipment requirements, etc. Of particular interest are spacecraft tasks/requirements during the final week before launch. (Refer to Section 6 for schedule constraints.)	Spacecraft agency
22. Spacecraft Mass Properties Statement and Nutation Time Constants The combined spacecraft/third-stage nutation time constant for preburn and postburn conditions is required before launch so that the effects of energy dissipation relative to spacecraft separation, coning buildup, and clearance during separation can be evaluated. The data from the spacecraft mass properties report is used in spin rocket configuration, orbit error, control, performance, and separation analyses. It represents the best current estimate of final spacecraft mass properties. The data should include any changes in mass properties while the spacecraft is attached to the Delta vehicle. Values quoted should include nominal and 3σ uncertainties for mass, centers of gravity, moments of inertia, products of inertia, and principal axis misalignment and Delta upper stage mass properties provided in Section 4.2.	Spacecraft agency
23. Nutation Control System Analysis Memorandum A Nutation Control System (NCS) analysis is performed to verify that the system is capable of controlling the third-stage coning motion induced by the dynamic-coupled instability. The NCS is activated at third-stage ignition and remains active throughout the burn and coast until the start of NCS blowdown. The principal inputs required for the analysis are the spacecraft mass properties and nutation time constants from Item 22 and the third-stage mass properties. The analysis outputs include spacecraft/third-stage rates and angular momentum pointing prior to spacecraft separation, third-stage velocity loss and pointing error (used in orbit dispersion analysis), and NCS propellant usage.	MDA
24. RF Compatibility Analysis A radio frequency interference (RFI) analysis is performed to verify that spacecraft RF sources are compatible with the launch vehicle telemetry and tracking beacon frequencies. Spacecraft frequencies defined in the mission specification are analyzed using a frequency compatibility software program. The program provides a listing of all intermodulation products which are then checked for image frequencies and intermodulation product interference.	MDA
25. Spacecraft/Launch Vehicle Separation Memorandum An analysis is performed to verify that there is adequate clearance and separation distance between the spacecraft and expended PAF/third stage. The principal parameters, including data from Item 22, that define the separation are the motor's residual thrust, half-cone angle, and spin rate. For two-stage missions this analysis verifies adequate clearance between the spacecraft and second stage during separation and second-stage post-separation maneuvers.	MDA (input required from user)
26. Launch Operations Plan (LOP) This plan is developed to define top-level requirements that flow down into detailed range requirements. The plan contains the launch operations configuration, which identifies data and communication connectivity with all required support facilities. The plan also identifies organizational roles and responsibilities, the mission control team and its roles and responsibilities, mission rules supporting conduct of the launch operation, and go/no-go criteria.	MDA
27. Vehicle Information Memorandum (VIM) MDA is required to provide a Vehicle Information Message to the US Space Command 15 calendar days prior to launch. The spacecraft agency will provide to MDA the appropriate spacecraft on-orbit data required for this VIM. Data required are spacecraft on-orbit descriptions, description of pieces and debris separated from the spacecraft, the orbital parameters for each piece of debris, S/C spin rates, and orbital parameter information for each different orbit through final orbit. MDA will incorporate these data into the overall VIM and transmit to the appropriate US government agency.	MDA
28. Postlaunch Orbit Confirmation Data To reconstruct Delta performance, orbit data at burnout (stage II or III) are required from the spacecraft agency. The spacecraft agency should provide orbit conditions at the burnout epoch based on spacecraft tracking data prior to any orbit correction maneuvers. A complete set of orbital elements and associated estimates of 3σ accuracy are required (see Table 8-6).	Spacecraft agency
29. Spacecraft-to-Blockhouse Wiring Diagram MDA will provide, for inclusion into the Mission Specification, a spacecraft-to-blockhouse wiring diagram based on the spacecraft requirements. It will define the hardware interface from the spacecraft to the blockhouse for control and monitoring of spacecraft functions after spacecraft installation in the launch vehicle.	MDA

Table 8-4. Spacecraft Questionnaire (Download Table)

1 Spacecraft Characteristics
- 1.1 Mission Objectives
- 1.2 Size and Space Envelope
  - 1.2.1 Dimensioned Drawings/CAD Model (Launch Configuration)
  - 1.2.2 Protuberances Within 50.8 mm/2.0 in. of Allowable Fairing Envelope Below Separation Plane (Identify Component and Location)
  - 1.2.3 Appendages Below Separation Plane (Identify Component and Location)
- 1.3 Orbit Configuration
- 1.4 Mass Properties and Dynamic Data (Launch Configuration/Separation Configuration Including Tolerances)
  - 1.4.1 Weight (Maximum or Nominal)
  - 1.4.2 CG Location
  - 1.4.3 Moments of Inertia About Spacecraft CG in Body Axes (I_{xx}, I_{yy}, I_{zz})
  - 1.4.4 Products of Inertia (I_{xy}, I_{xz}, I_{yz})
  - 1.4.5 Spacecraft Coordinate System
  - 1.4.6 Fundamental Frequencies (Thrust Axis/Lateral Axis)
  - 1.4.7 Are All Significant Vibration Modes Above 35 Hz in Thrust and 15 Hz (12 Hz for two stage) in Lateral Axes?
  - 1.4.8 Description of Spacecraft Dynamic Model
    - Mass Matrix
    - Stiffness Matrix
    - Response Recovery Matrix
  - 1.4.9 Combined Spacecraft-Third Stage Nutation Time Constant for Ignition and Burnout Conditions (If Applicable)
  - 1.4.10 Time Constant and Description of Spacecraft Energy Dissipation Sources and Locations (i.e., Hydrazine Fill Factor, Passive Nutation Dampers, Flexible Antennae, etc.)
- 1.5 Spacecraft Hazardous Systems
  - 1.5.1 Apogee Motor (Solid or Liquid)
  - 1.5.2 Attitude Control System
  - 1.5.3 Hydrazine (Quantity, Spec, etc.)
  - 1.5.4 Other Hazardous Fluids (Quantity, Spec, etc.)
  - 1.5.5 High Pressure Gas (Quantity, Spec, etc.)
  - 1.5.6 Radioactive Devices
  - 1.5.7 Can Spacecraft Produce Nonionizing Radiation at Hazardous Levels?
  - 1.5.8 Do Pressure Vessels Conform to Safety Requirements of Delta Payload Planners Guide Section 9?
  - 1.5.9 Location Where Pressure Vessels Are Loaded and Pressurized
  - 1.5.10 Other Hazardous Systems
- 1.6 Electro-Explosive Devices (EED)
  - 1.6.1 Category A EEDs (Function, Type, Part Number, When Installed, When Connected)
  - 1.6.2 Are Electrostatic Sensitivity Data Available on Category A EEDs? List References
  - 1.6.3 Category B EEDs (Function, Type, Part Number, When Installed, When Connected)
  - 1.6.4 Do Shielding Caps Comply With Safety Requirements?
  - 1.6.5 Are RF Susceptibility Data Available? List References
- 1.7 RF Systems
  - 1.7.1 System
  - 1.7.2 Frequency (MHz)
  - 1.7.3 Maximum Power (EIRP) (dBm)
  - 1.7.4 Average Power (W)
  - 1.7.5 Type of Transmitter
  - 1.7.6 Antenna Gain (dB)
  - 1.7.7 Antenna Location
  - 1.7.8 Distance at Which RF Radiation Flux Density Equals 1 mW/cm^2
  - 1.7.9 When is RF Transmitter Operated?
  - 1.7.10 RF Checkout Requirements (Location and Duration, to What Facility, Support Requirements, etc.)
- 1.8 Contamination-Sensitive Surfaces
- 1.9 Spacecraft Volume (Ventable and Non-Ventable)
- 1.10 Spacecraft Systems Activated Prior to Separation from Delta

2 Mission Requirements and Restraints
- 2.1 Number of Launches
- 2.2 Frequency of Launches
- 2.3 Desired Transfer Orbit
  - 2.3.1 Apogee (Integrated)
  - 2.3.2 Perigee (Integrated)
  - 2.3.3 Inclination
  - 2.3.4 Argument of Perigee at Insertion
  - 2.3.5 Other

Table 8-4. Spacecraft Questionnaire (Continued)

2.4 Launch Window Restraints and Duration
- 2.4.1 Sun Angle
- 2.4.2 Eclipse
- 2.4.3 Ascending Node
- 2.4.4 Inclination
- 2.4.5 Window Durations (Over a Year's Span)
- 2.4.6 Other

2.5 Separation Requirements (Including Tolerances)
- 2.5.1 Position
- 2.5.2 Attitude
- 2.5.3 Sequence and Timing
- 2.5.4 Tipoff and Coning
- 2.5.5 Spin Rate at Separation
- 2.5.6 Other

2.6 Special Trajectory Requirements
- 2.6.1 Thermal Maneuvers
- 2.6.2 T/M Maneuvers
- 2.6.3 Free Molecular Heating Restraints

3 Spacecraft-to-Launch Vehicle Interface Requirements

3.1 PAF Desired (3712A, 6915, etc.)

3.2 Interface Connector and Umbilicals
- 3.2.1 Type and Part Number
- 3.2.2 Location
- 3.2.3 Orientation

3.3 Electrical Bonding–Does The Spacecraft Comply With the Electrical Bonding Requirements of Section 4?

3.4 Spacecraft-to-Blockhouse Wiring Requirements
- 3.4.1 Number of Wires Required
- 3.4.2 Pin Assignments in the Spacecraft Umbilical Connector(s)
- 3.4.3 Purpose and Nomenclature of Each Wire Including Voltage, Current, Polarity Requirements, and Maximum Resistance
- 3.4.4 Shielding Requirements
- 3.4.5 Voltage of the Spacecraft Battery and Polarity of the Battery Ground

3.5 Does Spacecraft Require Discrete Signals from Delta?

3.6 Separation Switch Pads

3.7 Separation Switches

3.8 Separation Springs

3.9 Fairing Required (9.5 or 10 ft)

3.10 Access Doors in Fairing (Size, Location, Purpose)

3.11 RF Window Requirements (Size, Location, Purpose)

3.12 Fairing Environmental Requirements
- 3.12.1 Spacecraft In-Flight Requirements
- 3.12.2 Spacecraft Ground Requirements (Fairing Installed)
- 3.12.3 Critical Surfaces (i.e., Type, Size, Location)
- 3.12.4 Surface Sensitivity (e.g., Susceptibility to Propellants, Gases and Exhaust Products, and Other Contaminants
- 3.12.5 Purges Required

4 Spacecraft Processing Facility Requirements

4.1 Processing Facility Preference and Priority

4.2 List The Hazardous Processing Facilities the Spacecraft Project Desires to Use

4.3 What Are The Expected Dwell Times the Spacecraft Project Would Spend in the Payload Processing Facilities?

4.4 Spacecraft Environmental Requirements
- 4.4.1 Cleanliness Requirements
- 4.4.2 Temperature Requirements
- 4.4.3 Humidity Requirements
- 4.4.4 Do Spacecraft Contamination Requirements Conform With Capabilities of Existing Facilities?

4.5 What Are the Spacecraft and Ground Equipment Space Requirements?

4.6 What Are the Facility Crane Requirements?

4.7 What Are the Facility Electrical Requirements?

4.8 What Are the Security Requirements?

4.9 Is a Multishift Operation Planned?

4.10 List the Support Items the Spacecraft Project Needs from NASA, USAF, or Commercial Providers to Support the Processing of Spacecraft. Are There any Unique Support Items?

Table 8-4. Spacecraft Questionnaire (Continued)

4.11 Special MDA Handling Requirements
- 4.11.1 In Payload Processing Facility (PPF)
- 4.11.2 In Handling Can
- 4.11.3 On Stand
- 4.11.4 In Blockhouse

4.12 Special MDA-Supplied AGE or Facilities

4.13 Spacecraft-To-Blockhouse Signal Conditioning Requirements

5 Spacecraft Development and Test Programs

5.1 Test Schedule at Launch Site
- 5.1.1 Operations Flow Chart (Flow Chart Should Be a Detailed Sequence of Operations Referencing Days, Shifts, and Location)

5.2 Spacecraft Development and Test Schedules
- 5.2.1 Flow Chart and Test Schedule
- 5.2.2 Is a Test PAF Required? When?
- 5.2.3 Is Clamp Band Ordnance Required? When?

5.3 Special Test Requirements
- 5.3.1 Spacecraft Spin Balancing
- 5.3.2 Other

6 Identify Any Additional Spacecraft or Mission Requirements that Exceed the Capabilities or Violate the Constraints Defined in the Payload Planner's Guide

Table 8-5. Typical Spacecraft Launch Site Test Plan (Download Table)

1 General
1.1 Plan Organization
1.2 Plan Scope
1.3 Applicable Documents
1.4 Spacecraft Hazardous Systems Summary
2 Prelaunch/Launch Test Operations Summary
2.1 Schedule
2.2 Layout of Equipment (Each Facility) (Including Test Equipment)
2.3 Description of Event at Launch Site
- 2.3.1 Spacecraft Delivery Operations
  - 2.3.1.1 Spacecraft Removal and Transport to Spacecraft Processing Facility
  - 2.3.1.2 Handling and Transport of Miscellaneous Items (Ordnance, Motors, Batteries, Test Equipment, Handling and Transportation Equipment)
- 2.3.2 Payload Processing Facility Operations
  - 2.3.2.1 Spacecraft Receiving Inspection
  - 2.3.2.2 Battery Inspection
  - 2.3.2.3 RCS Leak Test
  - 2.3.2.4 Battery Installation
  - 2.3.2.5 Battery Charging
  - 2.3.2.6 Spacecraft Validation
  - 2.3.2.7 Solar Array Validation
  - 2.3.2.8 Spacecraft/Data Network Compatibility Test Operations
  - 2.3.2.9 Spacecraft Readiness Review
  - 2.3.2.10 Preparation for Transport, and Transport to HPF
- 2.3.3 Solid Fuel Storage Area
  - 2.3.3.1 AKM Receiving, Preparation, and X-Ray
  - 2.3.3.2 S&A Device Receiving, Inspection, and Electrical Test
  - 2.3.3.3 Igniter Receiving and Test
  - 2.3.3.4 AKM/S&A Assembly and Leak Test
- 2.3.4 HPF
  - 2.3.4.1 Spacecraft Receiving Inspection
  - 2.3.4.2 Preparation for AKM Installation
  - 2.3.4.3 Mate AKM to Spacecraft
  - 2.3.4.4 Spacecraft Weighing (Include Configuration Sketch and Approximate Weights of Handling Equipment)
  - 2.3.4.5 Spacecraft/Third-Stage Mating
  - 2.3.4.6 Preparation for Transport Installation Into Handling Can
  - 2.3.4.7 Transport to Launch Complex
- 2.3.5 Launch Complex Operations
  - 2.3.5.1 Spacecraft Hoisting and Removal of Handling Can
  - 2.3.5.2 Spacecraft Mate to Launch Vehicle
  - 2.3.5.3 Hydrazine Leak Test
  - 2.3.5.4 TT&C Checkout
  - 2.3.5.5 Preflight Preparations
  - 2.3.5.6 Fairing Installation
  - 2.3.5.7 Launch Countdown

2.4 Launch/Hold Criteria
2.5 Environmental Requirement for Facilities During Transport
3 Test Facility Activation
3.1 Activation Schedule
3.2 Logistics Requirements
3.3 Equipment Handling
- 3.3.1 Receiving
- 3.3.2 Installation
- 3.3.3 Validation
- 3.3.4 Calibration

3.4 Maintenance
- 3.4.1 Spacecraft
- 3.4.2 Launch Critical Mechanical AGE and Electrical AGE

4 Administration
4.1 Test Operations—Organizational Relationships and Interfaces (Personnel Accommodations, Communications)
5 Security Provisions for Hardware
6 Special Range Support Requirements
6.1 Real-Time Tracking Data Relay Requirements
6.2 Voice Communications
6.3 Mission Control Operations

M029: T034.1 4/16/93 3:01 PM

Table 8-6. Data Required for Orbit Parameter Statement (Download Table)

1. Epoch: Third-stage burnout

2. Position and velocity components ($X, Y, Z, \dot{X}, \dot{Y}, \dot{Z}$) in equatorial inertial Cartesian coordinates.* Specify mean-of-date or true-of-date, etc.

3. Keplerian elements* at the above epoch:
   - Semimajor axis, a
   - Eccentricity, e
   - Inclination, i
   - Argument of perigee, ω
   - Mean anomaly, M
   - Right ascension of ascending node, Ω

4. Polar elements* at the above epoch:
   - Inertial velocity, V
   - Inertial flight path angle, γ_1
   - Inertial flight path angle, γ_2
   - Radius, R
   - Geocentric latitude, ρ
   - Longitude, μ

5. Estimated accuracies of elements and a discussion of quality of tracking data and difficulties such as reorientation maneuvers within 6 hours of separation, etc.

6. Constants used:
   - Gravitational constant, μ
   - Equatorial radius, R_E
   - J_2 or Earth model assumed

7. Estimate of spacecraft attitude and coning angle at separation (if available).

*Note: At least one set of orbit elements in Items 2, 3, or 4 is required.

M029:T033 4/16/93 2:16 PM

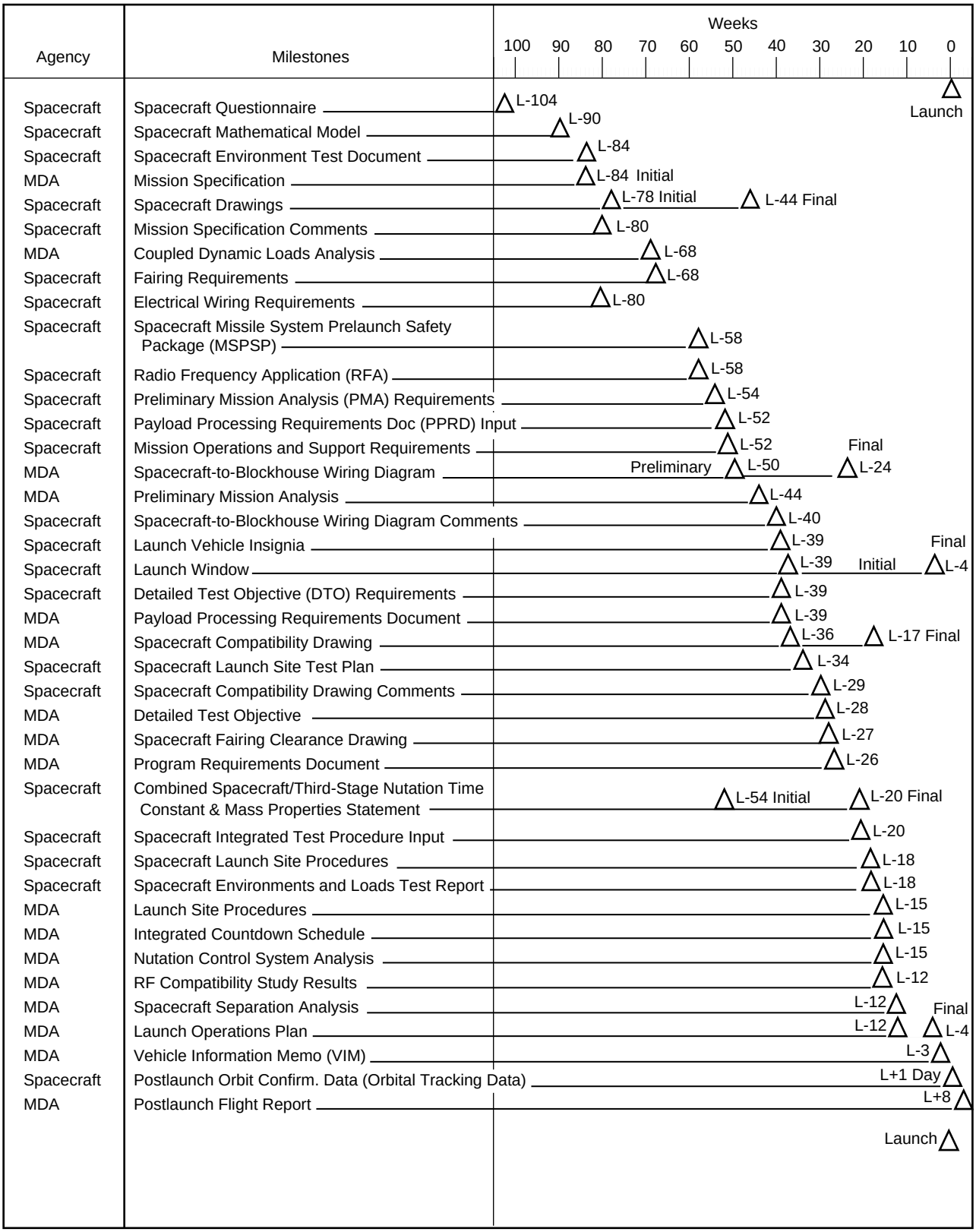

Figure 8-4. Typical Integration Planning Schedule

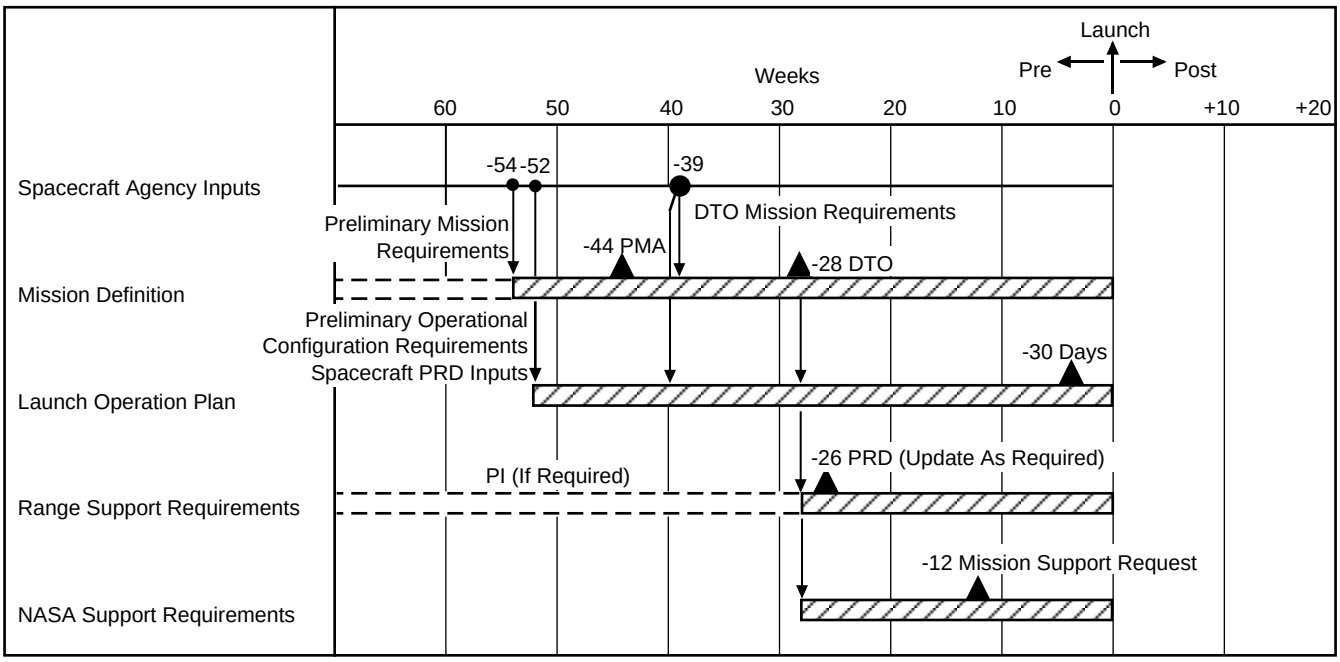

Figure 8-5. Launch Operational Configuration Development

Table 8-7. Spacecraft Checklist (Download Table)

1. General

A. Transportation of spacecraft elements/GSE to processing facility
   (1) Mode of transportation:
   (2) Arriving at _____(gate, skid strip)
      (date)_____

B. Data handling
   (1) Send data to (name and address)
   (2) Time needed (real time versus after the fact)

C. Training and medical examinations for _____ crane operators

D. Radiation data
   (1) Ionizing radiation materials
   (2) Nonionizing radiation materials/systems

2. Spacecraft Processing Facility (for nonhazardous work)

A. Does payload require a cleanroom? (yes) ____ (no) ____
   (1) Class of cleanroom required:
   (2) Special sampling techniques:

B. Area required:
   (1) For spacecraft _____ sq ft
   (2) For ground station _____ sq ft
   (3) For office space _____ sq ft
   (4) For other GSE _____ sq ft
   (5) For storage _____ sq ft

C. Largest door size:
   (1) For spacecraft/GSE _____ (high) _____ (wide)
   (2) For ground station:

D. Material handling equipment:
   (1) Cranes
      a. Capacity:
      b. Minimum hook height:
      c. Travel:
   (2) Other _____

E. Environmental controls for spacecraft/ground station
   (1) Temperature/humidity and tolerance limits:
   (2) Frequency of monitoring
   (3) Downtime allowable in the event of a system failure _____
   (4) Is a backup (portable) air-conditioning system required? (yes) _____ (no) _____
   (5) _____

F. Electrical power for payload and ground station
   (1) kVA required:
   (2) Any special requirements such as clean/quiet power, or special phasing? Explain _____
   (3) Backup power (diesel generator)
      a. Continuous:
      b. During critical tests:

G. Communications (list)
   (1) Administrative telephone
   (2) Commercial telephone _____
   (3) Commercial data phones _____
   (4) TWX machines _____
   (5) Operational intercom system _____
   (6) Closed circuit television _____
   (7) Countdown clocks _____
   (8) Timing _____
   (9) Antennas _____
   (10) Data lines (from/to where) _____
   (11) Type (wideband/narrowband) _____

H. Services general
   (1) Gases
      a. Specification _____ Procured by user? _____ KSC?_____
      b. Quantity _____
      c. Sampling: (yes) _____ (no) _____
   (2) Photographs/video _____ (quantity/B&W/color)
   (3) Janitorial (yes) _____ (no) _____
   (4) Reproduction services (yes) _____ (no) ____

I. Security (yes) _____ (no) _____
   (1) Safes _____ (number/type)

J. Storage _____ (size area) _____ environment

K. _____

L. Spacecraft PPF activities calendar
   (1) Assembly and testing _____
   (2) Hazardous operations
      a. Initial turn-on of a high-power RF system _____
      b. Category B ordnance installation _____
      c. Initial pressurization _____
      d. Other _____

M. Transportation of payloads/GSE from PPF to HPF
   (1) Will spacecraft agency supply transportation canister? _____ If no explain _____
   (2) Equipment support, e.g., mobile crane, flatbed _____
   (3) Weather forecast (yes) _____ (no) _____
   (4) Security escort (yes) _____ (no) _____
   (5) Other _____

3. Hazardous Processing Facility

A. Does spacecraft require a cleanroom? _____(yes) _____ (no)
   (1) Class of cleanroom required:
   (2) Special sampling techniques: (e.g., hydrocarbon monitoring)

B. Area required:
   (1) For spacecraft _____ sq ft
   (2) For GSE _____ sq ft

C. Largest door size:
   (1) For payload _____ high _____ wide
   (2) For GSE _____ high _____ wide

D. Material handling equipment
   (1) Cranes
      a. Capacity:
      b. Hook height:
      c. Travel _____
   (2) Other _____

E. Environmental controls spacecraft/GSE
   (1) Temperature/humidity and tolerance limits:
   (2) Frequency of monitoring _____
   (3) Down-time allowable in the event of a system failure _____
   (4) Is a backup (portable) system required? (yes) _____ (no) _____
   (5) Other _____

F. Power for spacecraft and GSE
   (1) kVA required:

G. Communications (list)
   (1) Administrative telephone _____
   (2) Commercial telephone _____

M029, T035, 7/15/97, 10:25 AM

Table 8-7. Spacecraft Checklist (Continued)

(3) Commercial data phones _____
(4) TWX machines _____
(5) Operational intercom system _____
(6) Closed circuit television _____
(7) Countdown clocks _____
(8) Timing _____
(9) Antennas _____
(10) Data lines (from/to where) _____

H. Services general
(1) Gases
a. Specification _____
Procured by user? _____ KSC? _____
b. Quantity _____
c. Sampling? (yes) _____ (no) _____
(2) Photographs/video ___ (quantity/B&W/color)
(3) Janitorial (yes) _____ (no) _____
(4) Reproduction services (yes) ____ (no) _____

I. Security (yes) _____ (no) _____

J. Storage _____ (size area)
(environment)_____

K. Other _____

L. Spacecraft HPF activities calendar
(1) Assembly and testing _____
(2) Hazardous operations
a. Category A ordnance installation _____
b. Fuel loading _____
c. Mating operations (hoisting)

M. Transportation of payloads to LC17
(1) Equipment support, e.g., mobile crane, flatbed
_____
(2) Weather forecast (yes) _____ (no) _____
(3) Security escort (yes) _____ (no) _____
(4) Other _____

4. Launch Complex White Room (MST)

A. Environmental controls payload/GSE
(1) Temperature/humidity and tolerance limits __
(2) Any special requirements such as clean/quiet power? Explain: _____
(3) Backup power (diesel generator)
a. Continuous:
b. During critical tests:
(4) Hydrocarbon monitoring required _____
(5) Frequency of monitoring _____
(6) Down-time allowable in the event of a system failure _____
(7) Other _____

B. Power for payload and GSE
(1) kVA required _____
(2) Any special requirements such as clean/quiet power/phasing?
Explain: _____
(3) Backup power (diesel generator)
a. Continuous: _____
b. During critical tests: _____

C. Communications (list)
(1) Operational intercom system _____
(2) Closed circuit television _____
(3) Countdown clocks _____
(4) Timing _____
(5) Antennas _____
(6) Data lines (from/to where) _____

D. Services general
(1) Gases
a. Specification _____
Procured by user? _____ KSC? _____
b. Quantity _____
c. Sampling? (yes) _____ (no) _____
(2) Photographs _____ (quantity/B&W/color)

E. Security (yes) _____ (no) _____

F. Other _____

G. Stand-alone testing (does not include tests involving the Delta II vehicle)
(1) Tests required _____
(e.g., RF system checkout, encrypter checkout)
(2) Communications required for _____
(e.g., antennas, data lines)
(3) Spacecraft servicing required _____
(e.g., cryogenics refill)

M029, T035.1, 9/20/95, 1:34 PM

Section 9
SAFETY

This section discusses the safety regulations and requirements that govern a payload to be launched by a Delta launch vehicle. Regulations and instructions that apply to spacecraft design and processing procedures are reviewed.

9.1 SAFETY REQUIREMENTS

Delta II spacecraft prelaunch operations are conducted at Cape Canaveral Air Station (CCAS), Florida; Astrotech in Titusville, Florida; Kennedy Space Center (KSC), Florida; and Astrotech; California Spaceport, Vandenberg Air Force Base (VAFB), California, by arrangement with the appropriate agencies. The USAF is responsible for overall safety at CCAS and VAFB and has established safety requirements accordingly. NASA safety regulations govern operations at KSC, and operations at Astrotech/California Spaceport are conducted in accordance with Astrotech/California Spaceport safety policies.

Before a spacecraft moves onto USAF property, the spacecraft agency must provide the Space Wing (SW) safety office with certification that its system has been designed and tested in accordance with Space Wing safety requirements (EWR 127-1 Range Safety Requirements). Safety of operations conducted at NASA facilities on KSC and at VAFB must comply with KSC Management Instruction (KMI) 1710.1G. For operations at the Eastern Range, both 45th Space Wing and NASA safety requirements are applicable. NASA/KSC at VAFB and 30th SW have safety responsibility at Astrotech-W, the NASA processing facilities, and at the SLC-2W launch pad. The NASA safety requirements and quality assurance (SR&QA) and protective services directorate implement the KSC safety program for operations conducted at NASA facilities. In general, USAF and NASA safety regulations for prelaunch activities are equivalent.

Because many spacecraft operations are performed by or involve launch vehicle contractor personnel, certain additional MDC safety requirements also apply.

The following documents specify the safety requirements applicable to Delta II users:

A. EWR 127-1, Range Safety Requirements, 31 March 1995.

B. KMI 1710.1G, Safety, Reliability, and Quality Assurance Programs, 5 September 1991.

C. Astrotech Space Operations Safety Standard Operating Procedure (SOP), 1988

D. Astrotech Space Operations Safety Standard Operating Procedure at Vandenberg AFB, September 22, 1994.

The above regulations and instructions reference other documents that further detail requirements for spacecraft design and operations. In addition, the space wing safety regulations are supplemented by policy letters issued by the controlling organizations. Policy letters change, clarify, or add to the existing regulations between formal revisions and have the same effectivity as the regulation. The Space Wing safety organizations encourage payload organizations to coordinate with them to generate a tailored version of the 127-1 document specific to each program. This process can greatly simplify the safety process at either range. MDA provides coordination and assistance to the spacecraft agency in this process.

In addition to the above regulations, the spacecraft agency must comply with MDA safety requirements specified in the launch site safety plan for operating at SLC-2. A specific spacecraft addendum to this plan may be required for unique spacecraft operations.

9.2 DOCUMENTATION REQUIREMENTS

Both USAF and NASA require formal submittal of safety documentation containing detailed information on all hazardous systems and associated operations. The 30th and 45th Space Wings (30 SW & 45 SW) at the Western and Eastern Range require preparation and submittal of a Missile System Prelaunch Safety Package (MSPSP). The content and format requirements of the document are found in the Space Wing 127-1 Range Safety Requirements and should be included in the tailoring process. Data requirements for both ranges include design, test, and operational considerations. NASA requirements in almost every instance are covered by the USAF requirements; however, the spacecraft agency can refer to KMI 1710.1G for details.

A Ground Operations Plan must be submitted describing hazardous and safety-critical operations for processing spacecraft systems and associated GSE.

Test and Inspection Plans are required for the use of hoisting equipment and pressure vessels at the ranges. These plans describe testing methods, analyses, and maintenance procedures utilized to ensure compliance with 127-1 requirements.

Diligent and conscientious preparation of the required safety documentation cannot be overemphasized. Each of the USAF launch range support organizations retains final approval authority over all hazardous operations that take place within its jurisdiction. Therefore, the spacecraft agency should consider the requirements of the 127-1 manual and KMI 1710.1G from the outset of a program, utilize them for design guidance, and submit the required data as early as possible. Document applicability is determined by mission type and launch site as shown in Table 9-1.

The safety document is submitted to the appropriate government agency or to MDA for commercial missions for review and further distribution. Sufficient copies of the original and all revisions must be submitted by the originator to enable a review by all concerned agencies. The review process usually requires several iterations until the system design and its intended use are considered to be final and in compliance with all safety requirements. The flow of spacecraft safety information is dependent on the range to be used, the customer, and contractual arrangements. Figure 9-1 illustrates the general documentation flow. Some differences exist depending on whether the payload is launching from the Eastern Range or the Western Range. Contact the Delta Program Office for specific details.

Each Air Force and NASA safety agency has a requirement for submittal of documentation for emitters of ionizing and nonionizing radiation. Required submittals depend on the location, use, and type of emitter and may consist of forms and/or analyses specified in the pertinent regulations and instructions.

An RF ordnance hazard analysis must be performed, documented, and submitted to confirm that the spacecraft systems and the local RF environ-

Table 9-1. Safety Document Applicability

Launch Site	Payload Type	Safety Document			
		EWR 127-1 Reference A	KMI 1710.1G Reference B	Astrotech SOP 1988 Reference C	Astrotech SOP 1994 Reference D
CCAS	NASA	X	X		
	Commercial	X		X	
VAFB	NASA	X	X		
	Commercial	X	X		X

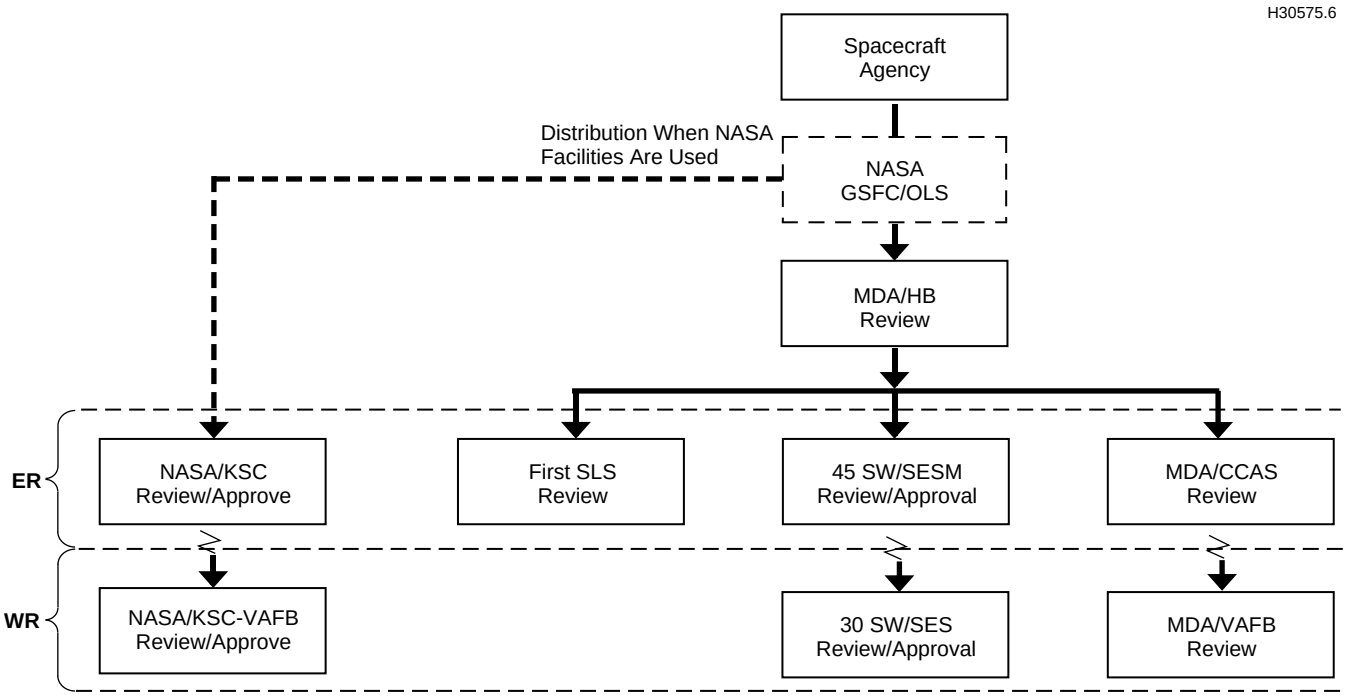

Figure 9-1. General Safety Documentation Flow for Commercial Missions

ment present no hazards to ordnance on the spacecraft or launch vehicle.

Each processing procedure that includes hazardous operations must have a written procedure approved by Space Wing safety (and NASA safety for NASA facilities). Those that involve MDA personnel or integrated operations with the launch vehicle must also be approved by MDA Test and Operational Safety.

9.3 HAZARDOUS SYSTEMS AND OPERATIONS

The requirements cited in the Space Wing safety regulations apply for hazardous systems and operations. However, MDA safety requirements are, in some cases, more stringent than those of the launch range. The design and operations requirements governing activities involving MDA participation are discussed in the following paragraphs.

9.3.1 Operations Involving Pressure Vessels (Tanks)

In order for MDA personnel to be exposed to pressurized vessels, the vessels must be designed, built, and tested to meet minimum factor of safety requirements (ratio between operating pressure and design burst pressure). All-metal vessels are acceptable, provided they are designed with a minimum calculated burst pressure of four times maximum allowable operating pressure, and that they also meet the requirements of EWR 127-1, Appendix 3C. MDA requires a minimum factor of safety of 2 to l for all pressure vessels which will be pressurized in the vicinity of MDA personnel. An alternative approach exists for metal tanks designed, built, and verified according to MIL-STD-1522A, Figure 2, Approach A, which are also acceptable for MDA personnel exposure.

Increasing use of composite pressure vessels in spacecraft propellant systems has led to the adoption of revised safety factor requirements for these types of pressure vessels. Safety factors applicable to composite pressure vessels differ from those applicable to all-metal tanks. The required safety factor varies according to the design and construction of the tanks. The applicable safety factor for

vessels of composite construction is dependent upon the percentage of load carried by the overwrap.

MDA requirements are aligned with the launch range requirements per EWR 127-1. Analyses and test documentation verifying the pressure vessel safety factor must be included in the spacecraft safety documentation.

Any operation that requires pressurization above levels that would maintain the required safety factor must be conducted remotely (no personnel exposure) and requires a minimum 5-minute stabilization period prior to personnel exposure.

9.3.2 Nonionizing Radiation

The spacecraft nonionizing radiation systems are subject to the design criteria in the USAF and KSC manuals and the special Delta-imposed criteria as follows:

- Systems producing nonionizing radiation will be designed and operated so that the hazards to personnel are at the lowest practical level.
- McDonnell Douglas employees are not to be exposed to nonionizing radiation above 1 mW/cm^2 averaged over any 1-minute interval. Safety documentation shall include the calculated distances at which a level of 10 mW/cm^2 (194 v/m) occurs (to meet the USAF requirement) and the distances at which a level of 1 mW/cm^2 (61 v/m) occurs (to meet the MDA requirement) for each emitter of nonionizing radiation. This requirement is separate and distinct from the requirement to submit the radiation source documentation mentioned in Paragraph 9.2.

9.3.3 Liquid Propellant Offloading

Space Wing Safety Regulations require that liquid propellants aboard spacecraft be able to be removed from tanks during any stage of prelaunch processing. Any tanks, piping, or other components containing propellants must be capable of being drained and then flushed and purged with inert fluids should a leak or other contingency require propellant offloading to reach a safe state. Spacecraft designs should consider the number and placement of drain valves to maintain accessibility by technicians in Propellant Handler's Equipment (PHE suits) throughout processing. Coordinate with the Delta Program Office to ensure that access can be accomplished while the payload fairing is in place and that proper interfaces can be made with Delta equipment and facilities.

9.3.4 Safing of Ordnance

Manual ordnance safing devices (S&A or safing/arming plugs) for Range Category A ordnance are also required to be accessible with the payload fairing installed. Consideration should be given to placing such devices so that they can reached through fairing openings and armed as late in the countdown as possible and safed in the event of an aborted/scrubbed launch if required. Early coordination with the Delta Program Office is needed to ensure that the required fairing access door(s) can be provided.

9.4 WAIVERS

Space Wing safety organizations discourage the use of waivers. They are normally granted only for spacecraft designs that have a history of proven safety. After a complete review of all safety requirements, the spacecraft agency should determine if waivers are necessary. A waiver or Meets Intent Certification (MIC) request is required forany safety-related requirement that cannot be met. If a non-compliant condition is suspected, coordinate with the appropriate Space Wing Safety organization to determine whether a Waiver or Meets Intent Certification will be required. Requests for waivers shall be submitted prior to implementation of the

safety-related design or practice in question. Waiver or MIC requests must be accompanied by sufficient substantiating data to warrant consideration and approval. It should be noted that the USAF Space Wing safety organizations determine when a waiver or MIC is required and have final approval of all requests. No guarantees can be made that approval will be granted.

Appendix A
Delta Missions Chronology

Delta no.	Mission	Launch date	Spacecraft weight (kg/lb)	Orbit parameters	Vehicle desig-nation	Launch site
*1	Echo I	05-13-60	62/137	1,667 x 1,667 km x 48 deg (900 x 900 nmi)	Delta	ETR
2	Echo IA	08-12-60	62/137	1,667x 1,667 km x 47 deg (900 x 900 nmi)	Delta	ETR
3	Tiros II	11-23-60	127/280	704 x 704 km x 48 deg (380 x 380 nmi)	Delta	ETR
4	Explorer X	03-25-61	35/78	174 x 222,240 km x 33 deg (94 x 120,000 nmi)	Delta	ETR
5	Tiros III	07-21-61	102/225	704 x 704 km x 48 deg (380 x 380 nmi)	Delta	ETR
6	Explorer XII	08-16-61	38/83	296 x 87,044 km x 33 deg (160 x 47,000 nmi)	Delta	ETR
7	Tiros IV	02-08-62	129/285	704 x 704 km x 48 deg (380 x 380 nmi)	Delta	ETR
8	OSO-A	03-07-62	208/458	556 x 556 km x 33 deg (300 x 300 nmi)	Delta	ETR
9	Ariel (UK)	04-26-62	62/136	370 x 1,019 km x 55 deg (200 x 550 nmi)	Delta	ETR
10	Tiros V	06-19-62	102/225	648 x 648 km x 58 deg (350 x 350 nmi)	Delta	ETR
11	Telstar I	07-10-62	77/170	926 x 5,556 km x 45 deg (500 x 3000 nmi)	Delta	ETR
12	Tiros V	09-18-62	129/285	648 x 648 km x 58 deg (350 x 350 nmi)	Delta	ETR
13	Explorer XIV	10-02-62	40/89	296 x 87,044 km x 33 deg (160 x 47,000 nmi)	A	ETR
14	Explorer XV	10-27-62	44/98	278 x 16,668 km x 18 deg (150 x 9,000 nmi)	A	ETR
15	Relay I	12-13-62	78/172	1296 x 7,408 km x 48 deg (700 x 4,000 nmi)	B	ETR
16	Syncom I	02-13-62	68/150	Synchronous transfer	B	ETR
17	Explorer XVI	04-02-63	186,409	250 x 898 km x 58 deg (135 x 485 nmi)	B	ETR
18	Telstar II	05-07-63	79/175	926 x 10,556 km x 43 deg (500 x 5,700 nmi)	B	ETR
19	Tiros VII	06-19-63	129/285	657 x 657 km x 58 deg (355 x 355 nmi)	B	ETR
20	Syncom II	07-26-63	67/147	Synchronous stationary	B	ETR
21	IMP-A	11-26-63	63/138	194 x 277,800 km x 33 deg (105 x 150,000 nmi)	B	ETR
22	Tiros VIII	12-21-63	129/285	685 x 685 km x 59 deg (370 x 370 nmi)	B	ETR
23	Relay II	01-21-64	83/184	2,130 x 7,408 km x 47 deg (1150 x 4,000 nmi)	B	ETR
*24	Ionosphere Beacon	03-19-64	52/115	1,189 x 1,198 km x 71 deg (642 x 647 nmi)	B	ETR
25	Syncom III	08-19-64	66/145	Synchronous transfer	D	ETR
26	IMP-B	10-03-64	61/135	194 x 203,740 km x 33 deg (105 x 110,011 nmi)	C	ETR
27	Explorer XXVI	12-21-64	46/101	322 x 25,524 km x 20 deg (174 x 13,782 nmi)	C	ETR
28	Tiros IX	01-22-65	137/301	741 x 741 km x 98 deg (400 x 400 nmi)	C	ETR
29	OSO-B	02-03-65	249/548	556 x 556 km x 33 deg (300 x 300 nmi)	C	ETR
30	Early Bird	04-06-65	68/149	Synchronous transfer	D	ETR
31	IMP-C	05-29-65	58/128	189 x 222,240 km x 33 deg (102 x 120,000 nmi)	C	ETR
32	Tiros X	07-01-65	136/300	796 x 800 km x 99 deg (430 x 432 nmi)	C	ETR
*33	OSO-C	08-25-65	281/619	556 x 556 km x 33 deg (300 x 300 nmi)	C	ETR
34	GEOS-A	11-06-65	174/384	1,111 x 1,483 km x 59 deg (600 x 801 nmi)	E	ETR
35	Pioneer-A	12-16-65	63.5/140	Heliocentric orbit, 0.984 x 0.829 AU	E	ETR
36	Tiros OT-3	02-03-66	129/285	737 x 756 km x 98 deg (398 x 408 nmi)	C	ETR
37	Tiros OT-2	02-28-66	148/326	1,324 x 1,396 km circular x 101 deg (715 x 743 nmi)	E	ETR
38	AE-B	05-25-66	223/492	270 x 1,204 km x 64 deg (146 x 650 nmi)	C	ETR
39	AIMP-D	07-01-66	93/206	6,667 x 555,296 km x 29 deg (3,600 x 299,836 nmi)	E	ETR
40	Pioneer-B	08-17-66	62.5/138	Heliocentric orbit 1.134 x 1.011 AU	E	ETR
41	TOS-A	10-02-66	148/326	1,400 x 1,420 km x 101 deg (756 x 767 nmi)	E	WTR
42	Intelsat II (F-1)	10-26-66	162/357	Synchronous transfer	E	ETR
43	BIOS-A	12-14-66	424.5/936	315 km circular x 33.5 deg (170 nmi)		ETR
44	Intelsat II (F-2)	01-11-67	163/360	Synchronous transfer	E	ETR
45	TOS-B	01-26-67	129/285	1,432 x 1,439 km x 101 deg (773 x 777 nmi)	E	WTR
46	OSO-E1	03-08-67	283.5/625	556 km circular x 33 deg (300 nmi)	C	ETR
47	Intelsat II (F-3)	03-22-67	163/360	Synchronous transfer	E	ETR
48	TOS-C	04-20-67	148/326	1,433 x 1,439 km circular x 101 deg (774 x 777 nmi)	E	WTR
49	IMP-F	05-24-67	74/163	259 x 225,944 km x 66.5 deg (140 x 122,000 nmi)	E	WTR
50	AIMP-E	07-19-67	104/230	Lunar orbit	E	ETR
51	BIOS-B	09-07-67	433/955	315 km circular x 33.5 deg (170 nmi)	G	ETR
52	Intelsat II (F-4)	09-27-67	162/357	Synchronous transfer	E	ETR
53	OSO-D	10-18-67	290/640	556 km circular x 33 deg (300 nmi)	C	ETR

Appendix A
Delta Missions Chronology (Continued)

Delta no.	Mission	Launch date	Spacecraft weight (kg/lb)	Orbit parameters	Vehicle desig-nation	Launch site
54	TOS-D	11-10-67	148/326	1,463 km circular x 102 deg (790 nmi)	E	WTR
55	Pioneer-C (secondary payload; TTS and Cal-NCE)	12-13-67	66/145	Heliocentric orbit, 1.100 x 0.987 AU	E	ETR
56	GEOS-B (secondary payload: Cal-NCE)	01-11-68	209.5/462	1,100 x 1,575 km x 106 deg (594 x 850 nmi)	E	WTR
57	RAE-A	07-04-68	276/608	639 x 5,880 km x 121 deg (345 x 3,175 nmi)	J	WTR
58	TOS-E	08-16-68	157/347	1,464 km circular x 102 deg (790 nmi)	N	WTR
*59	Intelsat III-A	09-18-68	291/641	Synchronous transfer	M	ETR
60	Pioneer-D (secondary payload: TTS)	11-08-68	67/147 24/53	Heliocentric orbit, 0.991 x 0.755 AU	E	ETR
61	HEOS-A	12-05-68	108/239	444 x 212,980 km x 28.3 deg (240 x 115,000 nmi)	E	ETR
62	TOS-F	12-15-68	154/340	1,463 km circular x 102 deg (790 nmi)	N	WTR
63	Intelsat III-C	12-18-68	293/647	Synchronous transfer	M	ETR
64	OSO-F	01-22-69	293/646	556 km circular x 33 deg (300 nmi)	C	ETR
65	ISIS-A	01-30-69	242/533	565 x 3,510 km x 88.5 deg (305 x 1,895 nmi)	E	WTR
66	Intelsat III-B	02-05-69	293/647	Synchronous transfer	M	ETR
67	TOS-G	02-26-69	156/345	1,463 km circular x 102 deg (790 nmi)	N	ETR
68	Intelsat III-D	05-21-69	293/647	Synchronous transfer	M	ETR
69	IMP-G	06-21-69	79/175	341 x 211,128 km x 83.8 deg (184 x 114,000 nmi)	E	WTR
70	BIOS-D	06-29-69	701/1546	370 km circular x 33.5 deg (200 nmi)	N	ETR
*71	Intelsat III-E	07-26-69	293/647	Synchronous transfer	M	ETR
72	OSO-G (secondary payload: PAC)	07-26-69 08-09-69	293/647 289/638 120/265	Synchronous transfer 556 km circular x 33 deg (300 nmi)	M N	ETR ETR
*73	Pioneer-E (secondary payload: TTS)	08-27-69	67/148	Heliocentric orbit, 1.03 x 0.98 AU	L	ETR
74	IDCSP/A	11-22-69	243/535	Synchronous transfer	M	ETR
75	Intelsat III-F	01-04-70	293/647	Synchronous transfer	M	ETR
76	Tiros-M (secondary payload: Oscar)	01-23-70	308/680 25/55	1,463 km circular 102 deg (790 nmi)	N-6	WTR
77	NATO-A	03-20-70	243/535	Synchronous transfer	M	ETR
78	Intelsat III-G	04-22-70	293/647	Synchronous transfer	M	ETR
79	Intelsat III-H	07-23-70	293/647	Synchronous transfer	M	ETR
80	IDCSP/A-B	08-19-70	243/535	Synchronous transfer	M	ETR
81	ITOS-A	12-11-70	308/680	1,463 km circular x 102 deg (790 nmi)	N-6	WTR
82	NATO-B	02-03-71	243/535	Synchronous transfer	M	ETR
83	IMP-I	03-13-71	288/635	237 x 212,928 km x 28.8 deg (128 x 114,972 nmi)	M-6	ETR
84	ISIS-B	04-01-71	264/582	1,402 km x 88.7 deg (757 nmi)	E	WTR
85	OSO-H (secondary payload: TETR)	09-29-71	636/1403	556 km circular x 33 deg (300 nmi)	N	ETR
*86	ITOS-B	10-21-71	309/682	1,463 km circular x 102 deg (790 nmi)	N-6	WTR
87	HEOS-A2	01-31-72	117/258	409 x 245,149 km x 90 deg (221 x 132,370 nmi)	L	WTR
88	TD-1	03-11-72	476/1050	550 km sun-synchronous (297 nmi)	N	WTR
89	ERTS-A	07-23-72	939/2070	917 km sun-synchronous (495 nmi)	900	WTR
90	IMP-H	09-22-72	390/860	241 km x 38 Earth radii x 28.7 deg (130 nmi)	1604	ETR
91	ITOS-D (secondary payload: Oscar)	10-15-72	337/742 18.1/40	1,463 km sun-synchronous (790 nmi)	300	WTR
92	Telesat-A	11-10-72	562/1238	Synchronous transfer	1914	ETR
93	Nimbus-E	12-10-72	803/1770	1,111 km sun-synchronous (600 nmi)	900	WTR
94	Telesat-B	04-20-73	563/1242	Synchronous transfer	1914	ETR
95	RAE-B	06-10-73	333/735	Lunar orbit	1913	ETR
*96	ITOS-E	07-16-73	340/749	1,463 sun-synchronous (790 nmi)	300	WTR
97	IMP-J	10-26-73	398/877	196 km x 37 Earth radii x 28.8 deg (106 nmi)	1604	ETR

Appendix A
Delta Missions Chronology (Continued)

Delta no.	Mission	Launch date	Spacecraft weight (kg/lb)	Orbit parameters	Vehicle desig-nation	Launch site
98	ITOS-F	11-06-73	340/749	1,520 km sun-synchronous (821 nmi)	300	WTR
99	AE-C	12-16-73	681/1500	157 x 4,315 km x 68 deg (85 x 2,330 nmi)	1900	WTR
*100	Skynet IIA	01-18-74	435/960	Synchronous transfer	2313	ETR
101	Westar-A	04-13-74	574/1265	Synchronous transfer	2914	ETR
102	SMS-A	05-17-74	626/1379	Synchronous transfer	2914	ETR
103	Westar-B	10-10-74	574/1265	Synchronous transfer	2914	ETR
104	ITOS-G (secondary payloads: Oscar Intasat)	11-15-74	340/749 23/50 23/50	1,463 km sun-synchronous (790 nmi)	2310	WTR
105	Skynet IIB	11-22-74	435/960	Synchronous transfer	2313	ETR
106	Symphonie-A	12-18-74	402/886	Synchronous transfer	2914	ETR
107	ERTS-B	01-22-75	964/2125	916 km sun-synchronous (495 nmi)	2910	WTR
108	SMS-B	02-06-75	630/1388	Synchronous transfer	2914	ETR
109	GEOS-C	04-09-75	337/742	848 km circular x 115 deg (458 nmi)	1410	WTR
110	Telesat-C	05-07-75	574/1265	Synchronous transfer	2914	ETR
111	Nimbus-F	06-12-75	907/2000	1,109 km sun-synchronous (599 nmi)	2910	WTR
112	OSO-1	06-21-75	1089/2400	556 km circular x 33 deg (300 nmi)	1910	ETR
113	COS B	08-08-75	277/611	348 x 99,993 km x 90 deg (188 x 53,992 nmi)	2913	WTR
114	Symphonie B	08-26-75	402/886	Synchronous transfer	2914	ETR
115	AE-D	10-06-75	675/1488	157 x 3,811 km x 90 deg (85 x 2,058 nmi)	2910	WTR
116	GOES-A	10-16-75	630/1388	Synchronous transfer	2914	ETR
117	AE-E	11-19-75	739/1630	159 x 2,998 km x 19 deg (85 x 1,619 nmi)	2910	ETR
118	RCA Satcom-A	12-12-75	868/1913	Synchronous transfer	3914	ETR
119	CTS	01-17-76	676/1490	Synchronous transfer	2914	ETR
120	Marisat-A	02-19-76	655/1445	Synchronous transfer	2914	ETR
121	RCA Satcom-B	03-26-76	868/1913	Synchronous transfer	3914	ETR
122	NATO III-A	04-22-76	700/1543	Synchronous transfer	2914	ETR
123	Lageos	05-04-76	408/900	5,900 km circular x 110 deg (3,186 nmi)	2913	WTR
124	Marisat-B	06-10-76	655/1445	Synchronous transfer	2914	ETR
125	Palapa-A	07-08-76	577/1273	Synchronous transfer	2914	ETR
126	ITOS-E-2	07-29-76	340/749	1,519 km sun-synchronous (820 nmi)	2310	WTR
127	Marisat-C	10-14-76	655/1445	Synchronous transfer	2914	ETR
128	NATO IIIB	01-28-77	700/1543	Synchronous transfer	2914	ETR
129	Palapa B	03-10-77	577/1273	Synchronous transfer	2914	ETR
*130	ESRO-GEOS	04-20-77	574/1265	Synchronous transfer	2914	ETR
131	GOES-B	06-16-77	630/1388	Synchronous transfer	2914	ETR
132	GMS	07-14-77	669/1476	Synchronous transfer	2914	ETR
133	Sirio	08-25-77	398/877	Synchronous transfer	2313	ETR
*134	OTS	09-13-77	865/1908	Synchronous transfer	3914	ETR
135	ISEE A/B	10-22-77	512/1128	280 x 140,320 km x 28.7 deg (151 x 75,767 nmi)	2914	ETR
136	Meteosat	11-22-77	663/1462	Synchronous transfer	2914	ETR
137	CS	12-14-77	675/1489	Synchronous transfer	2914	ETR
138	IUE	01-16-78	671/1479	167 x 46,344 km x 28.7 deg (90 x 25,024 nmi)	2914	ETR
139	Landsat C	03-05-78	940/2072	928 km (501 nmi) sun-synchronous	2910	WTR
140	BSE	04-07-78	676/1490	Synchronous transfer	2914	ETR
141	OTS-2	05-11-78	865/1908	Synchronous transfer	3914	ETR
142	GOES-C	06-16-78	635/1400	Synchronous transfer	2914	ETR
143	Esro-GEOS-2	07-14-78	574/1265	Synchronous transfer	2914	ETR
144	ISEE-C	08-12-78	478/1055	183 x 1,189,658 km x 28.78 deg (99 x 642,364 nmi)	2914	ETR
145	Nimbus G	10-24-78	938/2068	956 km sun-synchronous (516 nmi)	2910	WTR
146	NATO IIIC	11-18-78	700/1543	Synchronous transfer	2914	ETR

Appendix A
Delta Missions Chronology (Continued)

Delta no.	Mission	Launch date	Spacecraft weight (kg/lb)	Orbit parameters	Vehicle desig-nation	Launch site
147	Telesat-D	12-15-78	887/1956	Synchronous transfer	3914	ETR
148	Scatha	01-30-79	659/1452	185 x 43,226 km x 27.48 deg (100 x 23,340 nmi)	2914	ETR
149	Westar-C	08-09-79	574/1265	Synchronous transfer	2914	ETR
150	RCA-C	12-06-79	895/1974	Synchronous transfer	3914	ETR
151	SMM	02-14-80	2248/4956	574 km circular x 28.5 deg (310 nmi)	3910	ETR
152	GOES-D	09-09-80	833/1836	Synchronous transfer	3914	ETR
153	SBS-A	11-15-80	1083/2388	Synchronous transfer	3910	ETR
154	GOES-E	05-22-81	835/1841	Synchronous transfer	3914	ETR
155	DE-A/B	08-03-81	415/916	(A) 672 x 24,874 km x 90 deg (363 x 13,431 nmi) (B) 305.6 x 1,300 km x 90 deg (165 x 702 nmi)	3913	WTR
156	SBS-B	09-24-81	1085/2393	Synchronous transfer	3910	ETR
157	SME/Uosat	10-06-81	416/918 59.9/132	535 x 548.8 km x 97.5 deg (289 x 296 nmi)	2310	WTR
158	RCA-D	11-19-81	1082/2385	Synchronous transfer	3910	ETR
159	RCA-C	01-15-82	1082/2385	Synchronous transfer	3910	ETR
160	Westar IV	02-25-82	1108/2442	Synchronous transfer	3910	ETR
161	Insat-1A	04-10-82	1153/2541	Synchronous transfer	3910	ETR
162	Westar-V	06-08-82	1108/2442	Synchronous transfer	3910	ETR
163	Landsat-D	07-16-82	1972/4348	689 x 696 km x 98.3 deg (372 x 376 nmi)	3920	WTR
164	Telesat-F	08-26-82	1238/2730	Synchronous transfer	3920	ETR
165	RCA-E	10-27-82	1110/2447	Synchronous transfer	3924	ETR
166	IRAS/PIX II	01-25-83	1072/2375	906 x 909 km x 99.1 deg (489 x 491 nmi)	3910	WTR
167	RCA-F	04-11-83	1121/2472	Synchronous transfer	3924	ETR
168	GOES-F	04-28-83	835/1841	Synchronous transfer	3914	ETR
169	EXOSAT	05-26-83	510/1124	344 x 188,295 km x 72.5 deg (185.8 x 101,679 nmi)	3914	WTR
170	Galaxy-A	06-28-83	1218/2685	Synchronous transfer	3920	ETR
171	Telstar-3A	07-28-83	1218/2685	Synchronous transfer	3920	ETR
172	RCA-G	09-08-83	1121/2472	Synchronous transfer	3920	ETR
173	Galaxy-B	09-22-83	1218/2685	Synchronous transfer	3920	ETR
174	Landsat-D/Uosat	03-01-84	1973/4349	689 x 696.5 km x 98.3 deg (372 x 376 nmi)	3920	WTR
175	AMPTE	08-16-84	997/2198	939.4 x 113,417 km x 27 deg (507 x 61,245 nmi)	3924	ETR
176	Galaxy-C	09-21-84	1218/2685	Synchronous transfer	3920	ETR
177	NATO III-D	11-13-84	760/1675	Synchronous transfer	3914	ETR
*178	GOES-G	05-03-86	838/1848	Synchronous transfer	3914	ETR
180	DM43	09-05-86	2495/5500	222 km circular x 28.6 deg (120 nmi)	3920/ PAS	ETR
179	GOES-H	02-26-87	841/1853	Synchronous transfer	3924	ETR
182	Palapa-B2P	03-20-87	1244/2742	Synchronous transfer	3920	ETR
181	Thrusted Vector	02-08-88	1574/3470	222 x 333 km x 28.6 deg (120 x 180 nmi)	3910	ETR
184	Navstar II-1 GPS	02-14-89	1657/3645	20,183 km circular x 55.0 deg (10,898 nmi)	6925	ETR
183	Delta Star	03-24-89	2637/5800	270 nmi circular	3920	ETR
185	Navstar II-2 GPS	06-10-89	1657/3645	20,183 km circular x 55.0 deg (10,898 nmi)	6925	ETR
186	Navstar II-3	08-18-89	1664/3670	20,183 km circular x 55.0 deg incl (10,898 nmi)	6925	ETR
187	BSB R1	09-27-89	1233/2719	Synchronous transfer	4925	ETR
188	Navstar II-4	10-21-89	1664/3670	20,183 km/55.0 deg incl (10,898 nmi)	6925	ETR
189	COBE	11-18-89	2203/4857	900 km (486 nmi) circular	5920	WTR
190	Navstar II-5	12-11-89	1664/3670	20,183 km/55.0 deg incl (10,898 nmi)	6925	ETR
191	Navstar II-6	01-24-90	1664/3670	20,183 km/55.0 deg incl (10,898 nmi)	6925	ETR
192	Losat	02-14-90	2449/5400	546 km circular (295 nmi)	6920-8	ETR
193	Navstar II-7	03-25-90	1664/3670	20,183 km/55.0 deg incl (10,898 nmi)	6925	ETR
194	Palapa B2R	04-13-90	1241/2736	Synchronous transfer	6925-8	ETR
195	Rosat	06-01-90	2440/5380	580 km circular (313 nmi)	6920-10	ETR

Appendix A
Delta Missions Chronology (Continued)

Delta no.	Mission	Launch date	Spacecraft weight (kg/lb)	Orbit parameters	Vehicle desig-nation	Launch site
196	Insat	06-12-90	1293/2851	Synchronous transfer	5925	ETR
197	Navstar II-8	08-02-90	1664/3670	20,183 km circular x 55.0 deg (10,898 nmi)	6925	ETR
198	BSB-R2	08-17-90	1233/2719	Synchronous transfer	6925	ETR
199	Navstar II-9	10-01-90	1664/3670	20,183 km circular x 55.0 deg (10,898 nmi)	6925	ETR
200	Inmarsat 2-F1	10-30-90	1370/3020	Synchronous transfer	6925	ETR
201	Navstar II-10	11-26-90	1882/4150	20,183 km circular x 55.0 deg (10,898 nmi)	7925	ETR
202	NATO IVA	01-07-91	1434/3161	Synchronous transfer	7925	ETR
203	Inmarsat 2-F2	03-08-91	1385/3054	Synchronous transfer	6925	ETR
204	ASC-2	04-12-91	1358/2994	Synchronous transfer	7925	ETR
205	Aurora II	05-29-91	1338/2950	Synchronous transfer	7925	ETR
206	Navstar II-11/LOSAT	07-03-91	1882/4150	20,183 km circular x 55.0 deg (10,898 nmi)	7925	ETR
207	Navstar II-12	02-23-92	1882/4150	20,183 km circular x 55.0 deg (10,898 nmi)	7925	ER
208	Navstar II-13	04-09-92	1882/4150	20,183 km circular x 55.0 deg (10,898 nmi)	7925	ER
209	Palapa B4	05-13-92	1252/2761	Synchronous transfer	7925-8	ER
210	EUVE	06-07-92	3249/7165	528 km circular (285 nmi)	6920-10	ER
211	Navstar II-14	07-07-92	1882/4150	20,183 km circular x 55.0 deg (10,898 nmi)	7925	ER
212	Geotail/DUVE	07-24-92	1009/2225	349,635 x 182 km x 28.7 deg (188,788 x 98.5 nmi)	6925	ER
213	Satcom C4	08-31-92	1402/3092	Synchronous transfer	7925	ER
214	Navstar II-15	09-09-92	1882/4150	20,183 km circular x 55.0 deg (10,898 nmi)	7925	ER
215	Kopernikus	10-12-92	1411/3111	Synchronous transfer	7925	ER
216	Navstar II-16	11-21-92	1882/4150	20,183 km circular x 55.0 deg (10,898 nmi)	7925	ER
217	Navstar II-17	12-18-92	1882/4150	20,183 km circular x 55.0 deg (10,898 nmi)	7925	ER
218	Navstar II-18	02-02-93	1882/4150	20,183 km circular x 55.0 deg (10,898 nmi)	7925	ER
219	GPS-1/SEDS-1	03-29-93	1882/4150	20,183 km circular x 55.0 deg (10,898 nmi)	7925	ER
220	GPS 2	05-12-93	1882/4150	20,183 km circular x 55.0 deg (10,898 nmi)	7925	ER
221	GPS-3/PMG	06-26-93	1882/4150	20,183 km circular x 55.0 deg (10,898 nmi)	7925	ER
222	GPS-4	08-30-93	1882/4150	20,183 km circular x 55.0 deg (10,898 nmi)	7925	ER
223	GPS-5	10-26-93	1882/4150	20,183 km circular x 55.0 deg (10,898 nmi)	7925	ER
224	NATO-IVB	12-07-93	1434/3161	Synchronous transfer	7925	ER
225	Galaxy I-R	02-19-94	1400/3085	Synchronous transfer	7925-8	ER
226	GPS-6/SEDS-2	03-09-94	1882/4150	20,183 km circular x 55.0 deg (10,898 nmi)	7925	ER
227	Wind	11-01-94	1250/2756	495,193 x 186.7 km x 28.75 deg (267,384 x 100.8 nmi)	7925	ER
**228	Koreasat I	08-05-95	1447/3190	Synchronous transfer	7925	ER
229	Radarsat/SURFSAT	11-04-95	2865/6317	784 km x 800 km x 98.6 deg (423 x 432 nmi)	7920-10	WR
230	XTE	12-30-95	3030/6680	580 km circular x 23 deg (313.1 nmi)	7920-10	ER
231	Koreasat II	01-04-96	1457/3212	Synchronous transfer	7925	ER
232	NEAR	02-17-96	806/1778	Hyperbolic Escape (C=25.7)	7924-8	ER
233	POLAR	02-24-96	1301/2868	185 x 50,719 km x 86 deg (100 x 27,386 nmi)	7925-10	WR
234	GPS-7	03-28-96	1884/4154	20,183 km circular x 55.0 deg (10,898 nmi)	7925	ER
235	MSX	04-24-96	2800/6173	903 km circular x 99.23 deg (487.5 nmi)	7920-10	WR

*Vehicle Failure
**One GEM solid motor carried to Stage I/II separation resulting in transfer orbit apogee outside of these sigma limits. Spacecraft fuel had to be expended to place satellite on station at the expense of lifetime.

M029-App I T039-4/19/96 05:33 PM

BOEING®

Appendix B
NATURAL AND TRIGGERED LIGHTNING LAUNCH COMMIT CRITERIA

The Delta launch vehicle will not be launched if any of the following criteria are not met. Even when these constraints are not violated, if any other hazardous weather conditions exist, the Launch Weather Officer will report the threat to the Launch Director. The Launch Director may hold at any time based on the instability of the weather.

A. Do not launch if any type of lightning is detected within 10 nautical miles of the planned flight path within 30 minutes prior to launch, unless the meteorological condition that produced the lightning has moved more than 10 nautical miles away from the planned flight path.

B. Do not launch if the planned flight path will carry the vehicle:

(1) through a cumulus cloud with its top between the + 5.0 degree C and - 5.0 degree C level unless:

(a) the cloud is not producing precipitation;

-AND-

(b) the horizontal distance from the farthest edge of the cloud top to at least one working field mill is less than the altitude of the – 5.0 degree C level, or 3 nautical miles, whichever is smaller;

-AND-

(c) all field mill readings within 5 nautical miles of the flight path are between – 100 V/m and + 1000 V/m for the preceding 15 minutes.

(2) through cumulus clouds with tops higher than the – 5.0 degree C level.

(3) through or within 5 nautical miles (horizontal or vertical) of the nearest edge of cumulus clouds with tops higher than the – 10.0 degree C level.

(4) through or within 10 nautical miles (horizontal or vertical) of the nearest edge of any cumulonimbus or thunderstorm cloud, including non-transparent parts of its anvil.

(5) through or within 10 nautical miles (horizontal or vertical) of the nearest edge of a non-transparent detached anvil for the first hour after detachment from the parent thunderstorm or cumulonimbus cloud.

Note: "Cumulus" does not include Altocumulus or Stratocumulus.

C. Do not launch if, for ranges equipped with a surface electric field mill network, at any time during the 15 minutes prior to launch time, the absolute value of any electric field intensity measurement at the ground is greater than 1000 V/m within 5 nautical miles of the flight path unless:

(1) there are no clouds within 10 nautical miles of the flight path except:

(a) transparent clouds,

-OR-

(b) clouds with tops below the + 5.0 degree C level that have not been associated with convective clouds with tops above the – 10.0 degree C level within the past three hours,

-AND-

(2) a known source of electric field (such as ground fog) that is occurring near the sensor, and that has been previously determined and documented to be benign, is clearly causing the elevated readings.

Note: For confirmed failure of the surface field mill system, the countdown and launch may continue, since the other lightning launch commit criteria completely describe unsafe meteorological conditions.

D. Do not launch if the flight path is through a vertically continuous layer of clouds with an overall depth of 4,500 feet or greater where any part of the clouds is located between the 0.0 degree C and -20.0 degree C levels.

E. Do not launch if the flight path is through any clouds that:

(1) extend to altitudes at or above the 0.0 degree C level,

-AND-

(2) are associated with disturbed weatherthat is producing moderate (29 dBz) or greater precipitation within 5 nautical miles of the flight path.

F. Do not launch if the flight path will carry the vehicle:

(1) through any non-transparent thunderstorm or cumulonimbus debris cloud during the first 3 hours after the debris cloud formed from the parent cloud.

(2) within 5 nautical miles (horizontal or vertical) of the nearest edge of a non-transparent thunderstorm or cumulonimbus debris cloud during the first 3 hours after the debris cloud formed from a parent cloud unless:

(a) there is at least one working field mill within 5 nautical miles of the debris cloud;

-AND-

(b) all electric field intensity measurements at the ground are between + 1000 V/m and – 1000 V/m within 5 nautical miles of the flight path during the 15 minutes preceding the launch time;

-AND-

(3) The start of the 3-hour period is reckoned as follows:

(a) **DETACHMENT**. If the cloud detaches from the parent cloud: the 3-hour period begins at the time when cloud detachment is observed or at the time of the last detected lightning discharge (if any) from the detached debris cloud, whichever is later.

(b) **DECAY or DETACHMENT UNCERTAIN.** If it is not known whether the cloud is detached or the debris cloud forms from the decay of the parent cloud: the 3-hour period begins at the time when the parent cloud top decays to below the altitude of the –10 degree C level, or at the time of the last detected lightning discharge (if any) from the parent cloud or debris cloud, whichever is later.

G. Good Sense Rule: Even when constraints are not violated, if hazardous conditions exist, the Launch Weather Officer will report the threat to the Launch Director. The Launch Director may hold at any time based on the weather threat.

H. Definitions/Explanations

(1) **Anvil:** Stratiform or fibrous cloud produced by the upper level outflow or blow-off from thunderstorms or convective clouds.

(2) **Cloud Edge:** The visible cloud edge is preferred. If this is not possible, then the 10 dBz radar cloud edge is acceptable.

(3) **Cloud Layer:** An array of clouds, not necessarily all of the same type, whose bases are approximately at the same level. Also,

multiple arrays of clouds at different altitudes that are connected vertically by cloud elements, e. g., turrets from one cloud to another. Convective clouds (e. g., clouds under Rule B above) are excluded from this definition unless they are imbedded with other cloud types.

(4) **Cloud Top:** The visible cloud top is preferred. If this is not possible, then the 13 dBz radar cloud top is acceptable.

(5) **Cumulonimbus Cloud:** Any convective cloud with any part above the –20.0 degree C temperature level.

(6) **Debris Cloud:** Any non-transparent cloud that has become detached from a parent cumulonimbus cloud or thunderstorm, or results from the decay of a parent cumulonimbus cloud or thunderstorm.

(7) **Documented:** With respect to Rule C(2), 'documented' means sufficient data has been gathered on the benign phenomena to both understand it and to develop procedures to evaluate it, and the supporting data and evaluation have been reported in a technical report, journal article, or equivalent publication. For launches at the Eastern Range, copies of the documentation shall be maintained by the 45th Weather Squadron and KSC Weather Projects Office. The procedures used to assess the phenomena during launch countdowns shall be documented and implemented by the 45th Weather Squadron.

(8) **Electric Field (for surface-based electric field mill measurements):** The one-minute arithmetic average of the vertical electric field (Ez) at the ground, such as measured by a ground-based field mill. The polarity of the electric field is the same as that of the potential gradient; that is, the polarity of the field at the ground is the same as that of the charge overhead.

(9) **Flight Path:** The planned flight trajectory including its uncertainties ('error bounds').

(10) **Precipitating Cloud:** Any cloud containing precipitation, producing virga, or having radar reflectivity greater than 13 dBz.

(11) **Thunderstorm:** Any cloud that produces lightning.

(12) **Transparent:** Synonymous with visually transparent. Sky cover through which higher clouds, blue sky, stars, etc., may be clearly observed from below. Also, sky cover through which terrain, buildings, etc., may be clearly observed from above. Sky cover through which forms are blurred, indistinct, or obscured is not transparent.

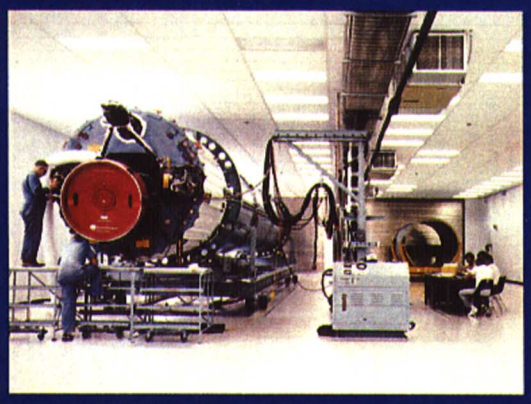

Delta Mission Checkout Facility

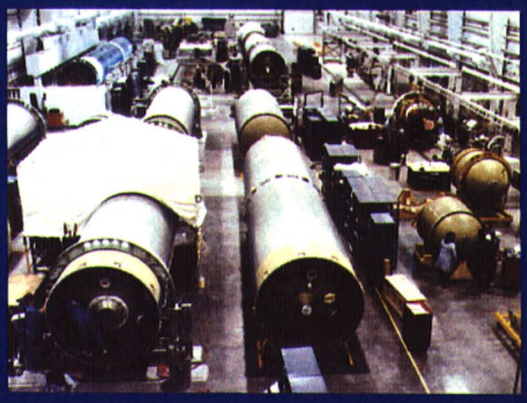

Pueblo Production Facility

Space Launch Complex 17

Space Launch Complex 2

Boeing Huntington Beach

DELTA II

The Boeing Company
5301 Bolsa Avenue, Huntington Beach, CA 92647-2099
(714) 896-3311, TELEX 67-8426, FAX (714) 896-4459

BOEING®