Lampton shutter B
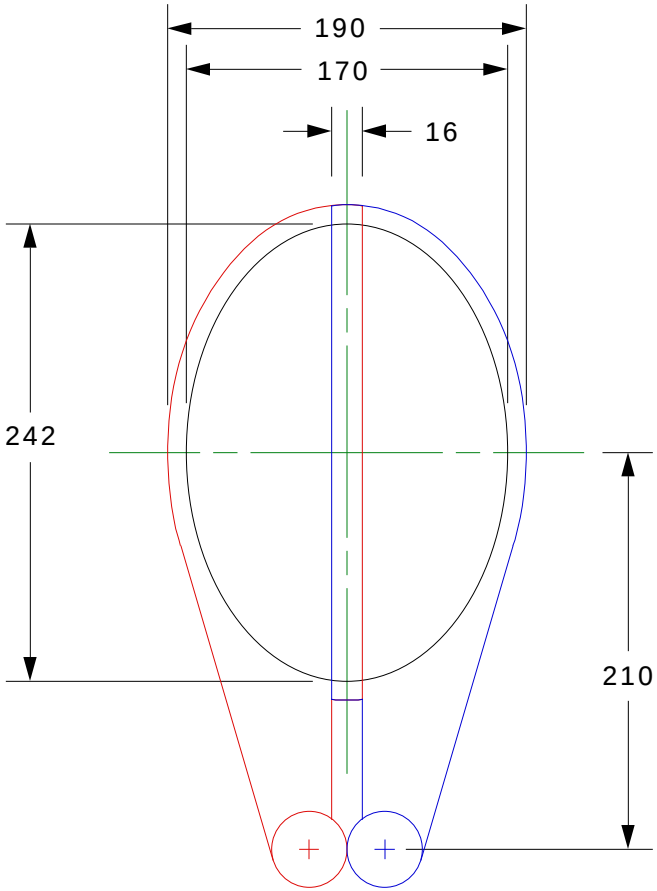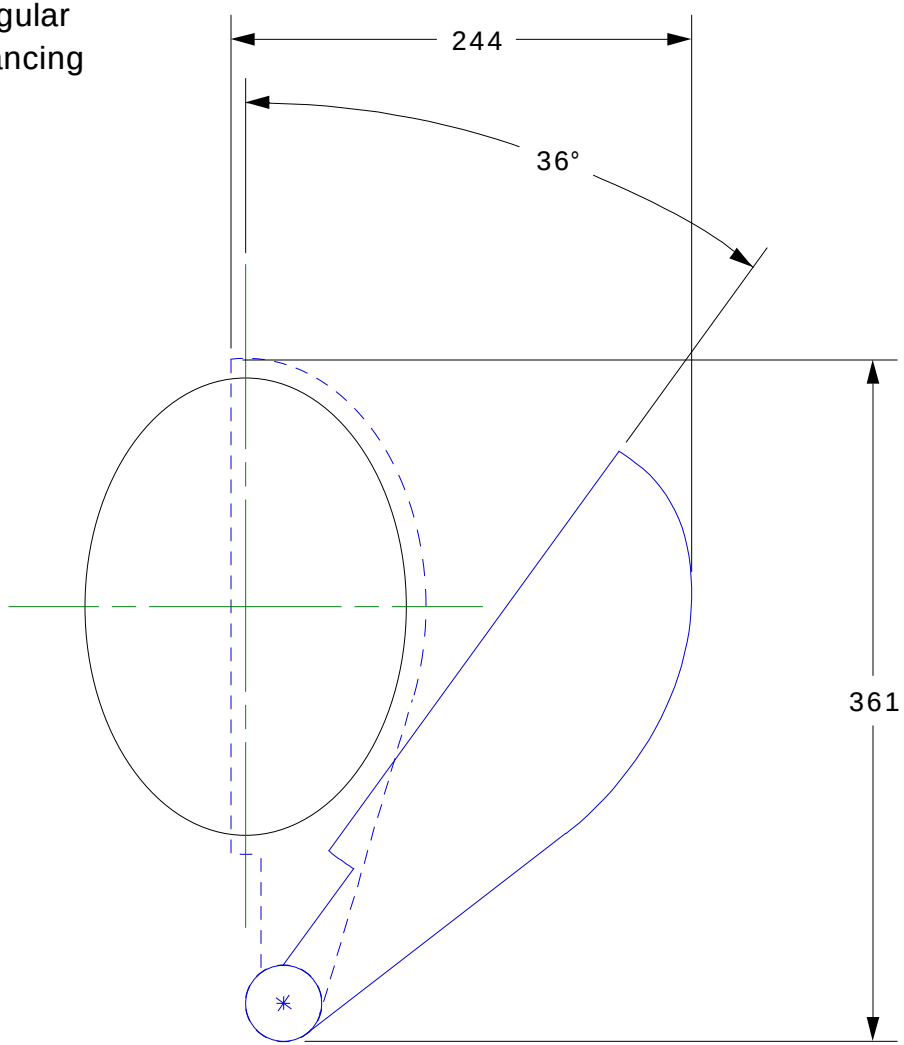
In this version, the pivots are farther from the centers of the apertures, increasing the polar moments of inertia of the blades 59% but decreasing the requisite angular movement 28%. Note: Counterweights for balancing blades not shown.