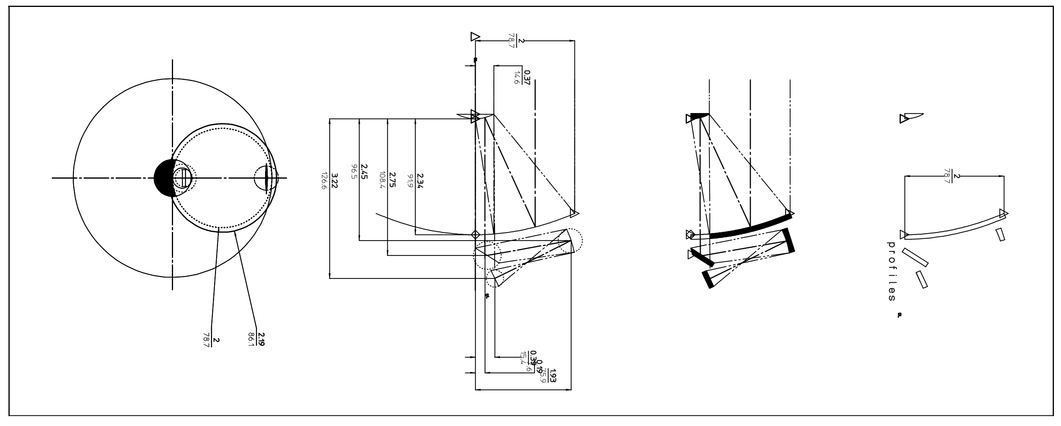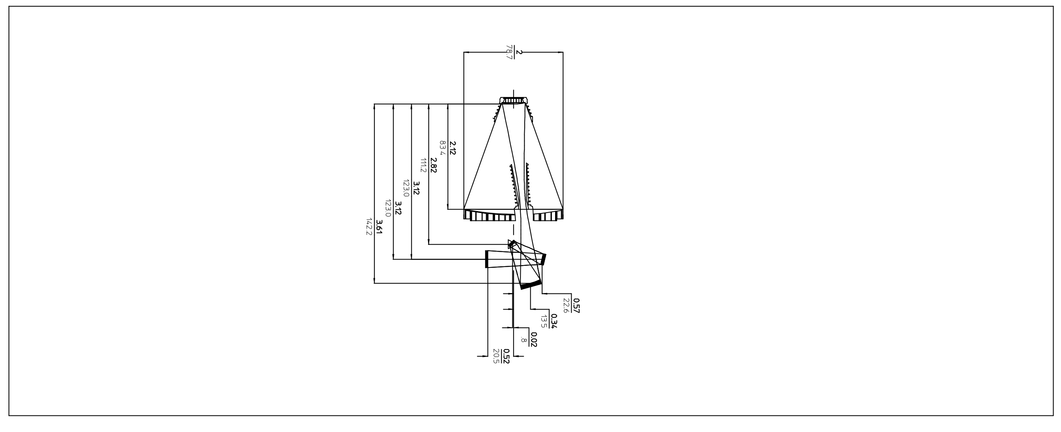
profiles