Fitup study using Phytron ZSS-42 stepping motors

FIDO Shutter Assembly D76

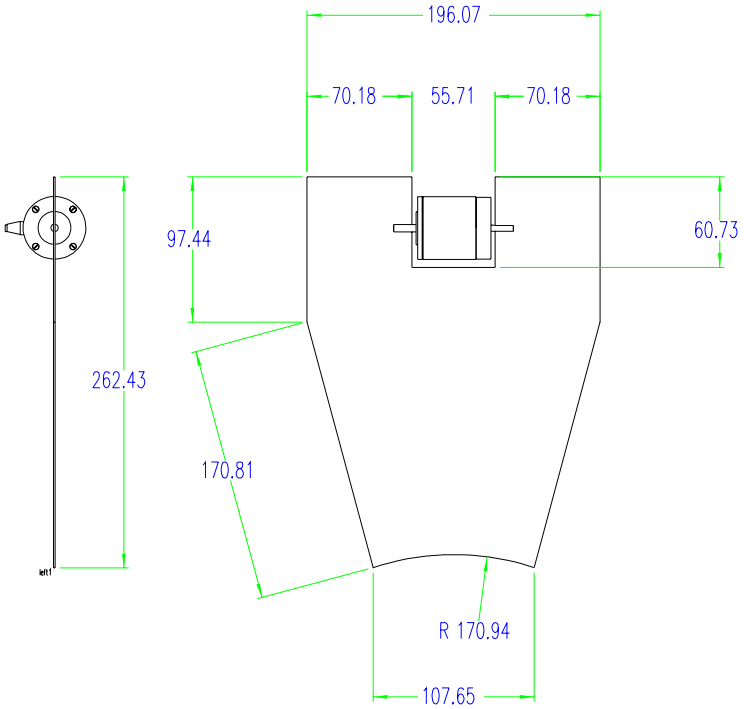

Fitup study using Phytron ZSS-42 stepping motors

FIDO Shutter Assembly D76

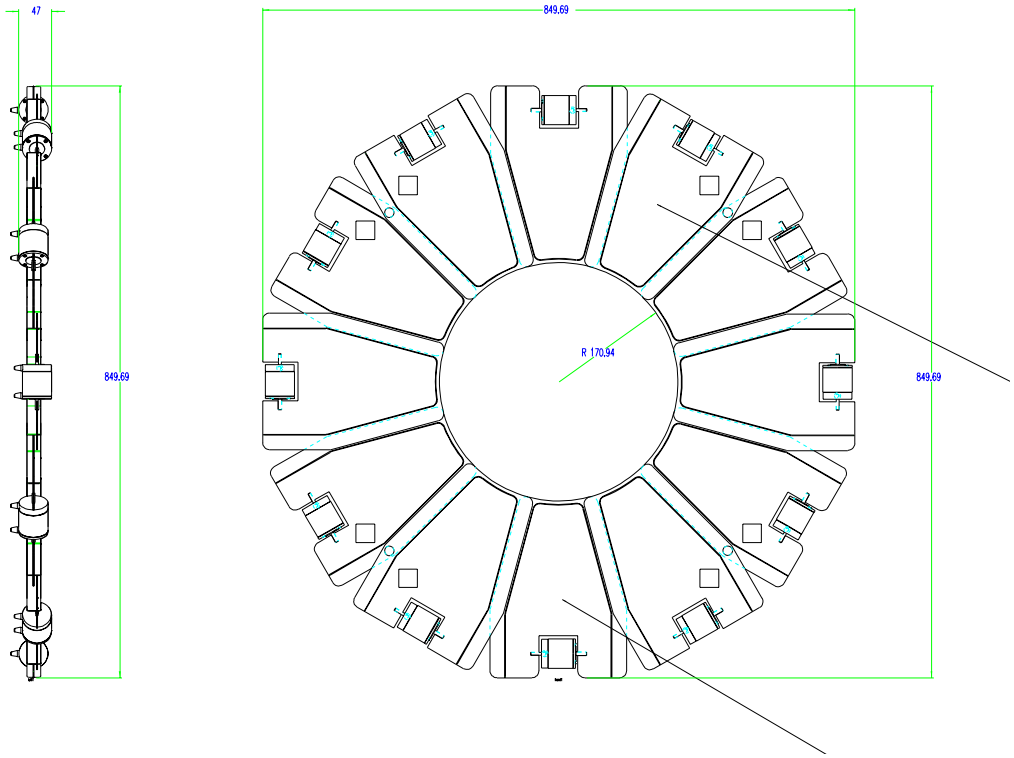

Fitup study using Phytron ZSS-42 stepping motors

FIDO Shutter Assembly D76

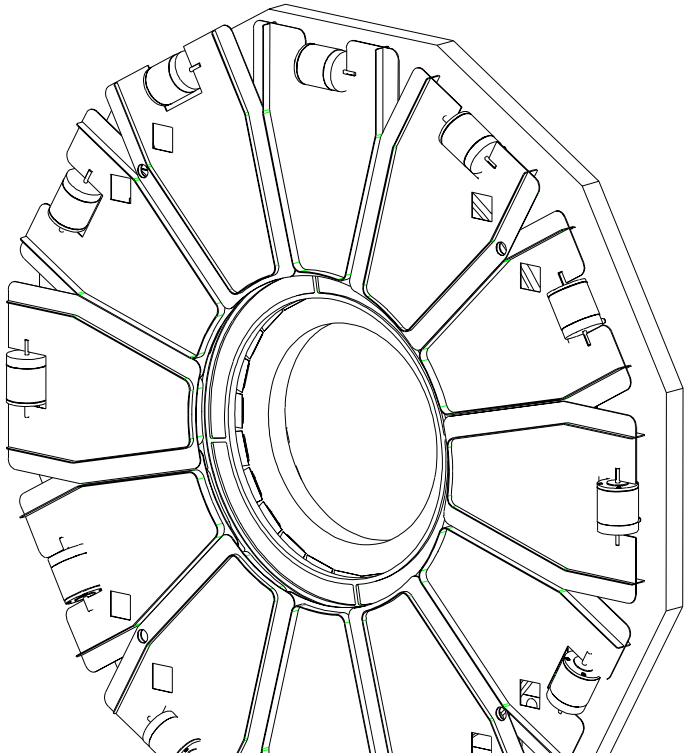

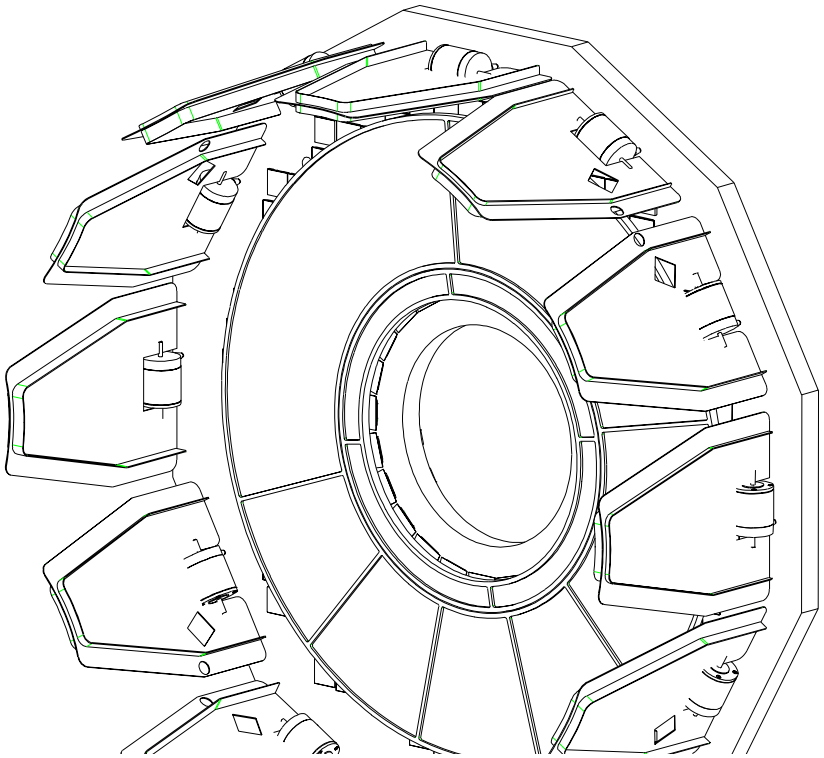

Fitup study using Phytron ZSS-42 stepping motors

FIDO Shutter Assembly D76

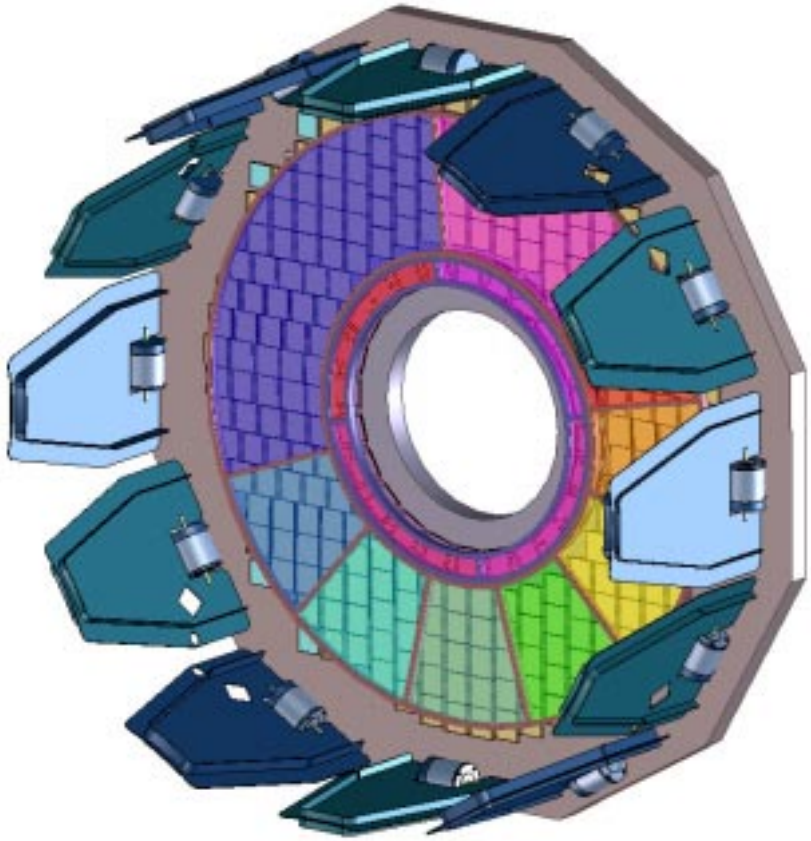

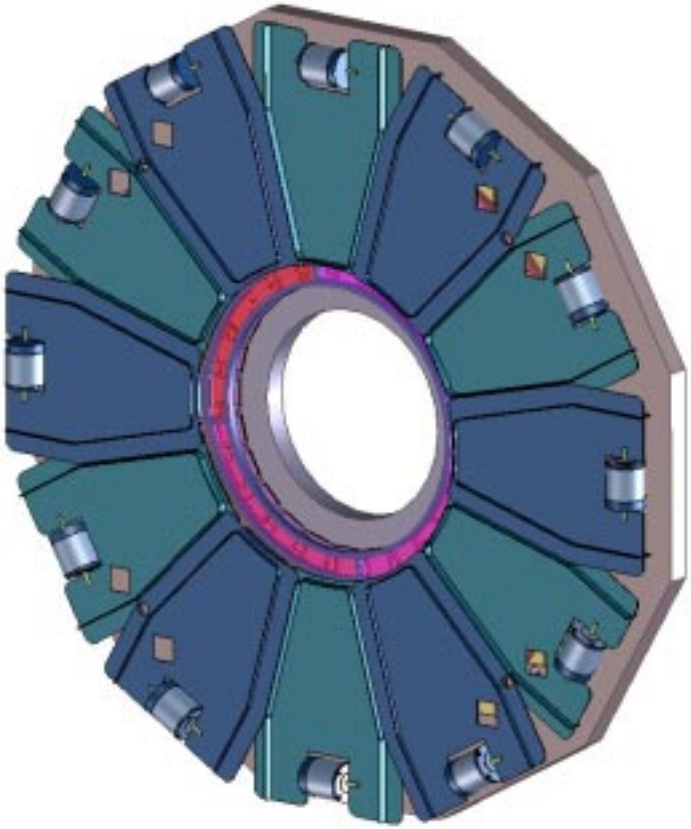

Fitup study using Phytron ZSS-42 stepping motors

FIDO Shutter Assembly D76

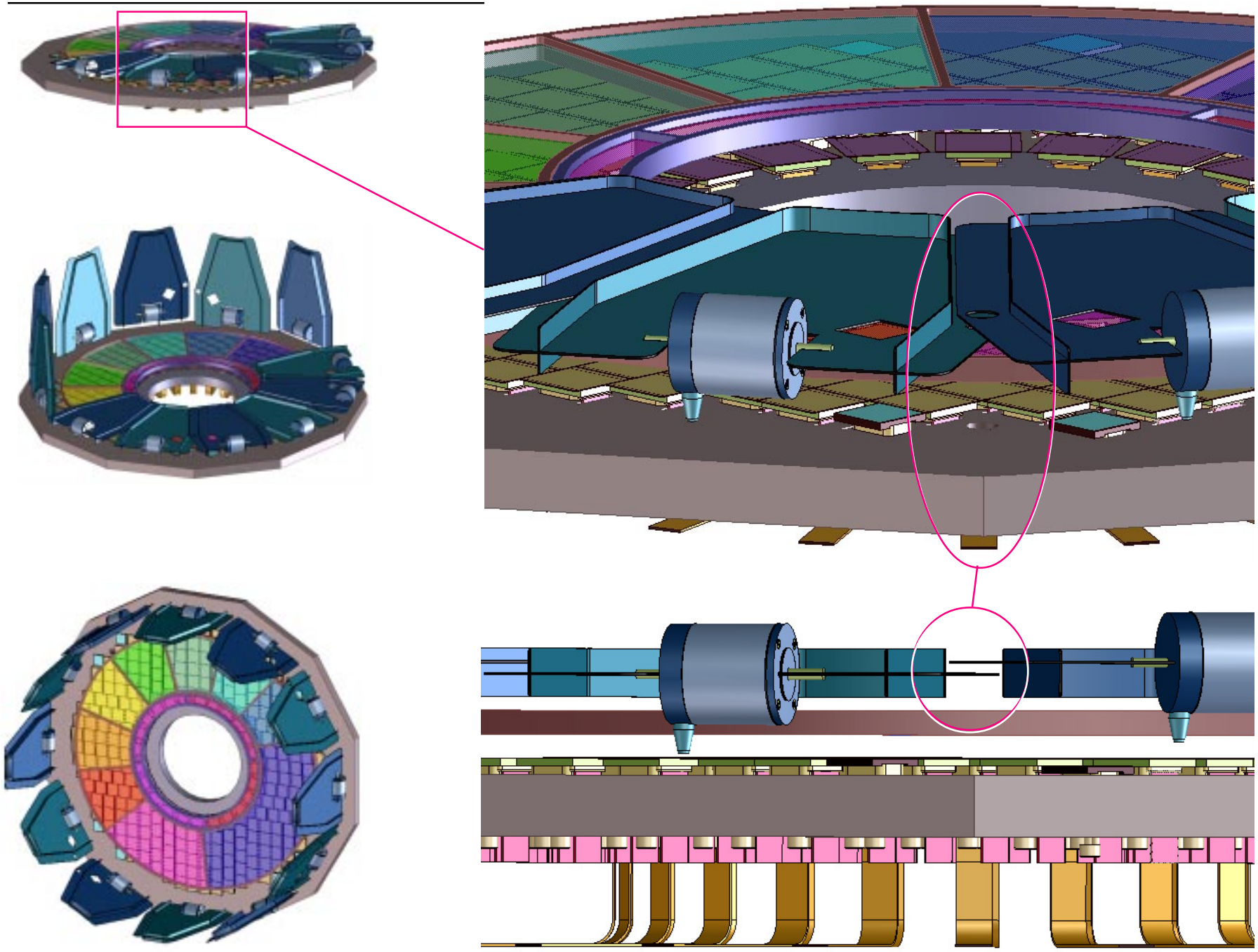

Fitup study using Phytron ZSS-42 stepping motors
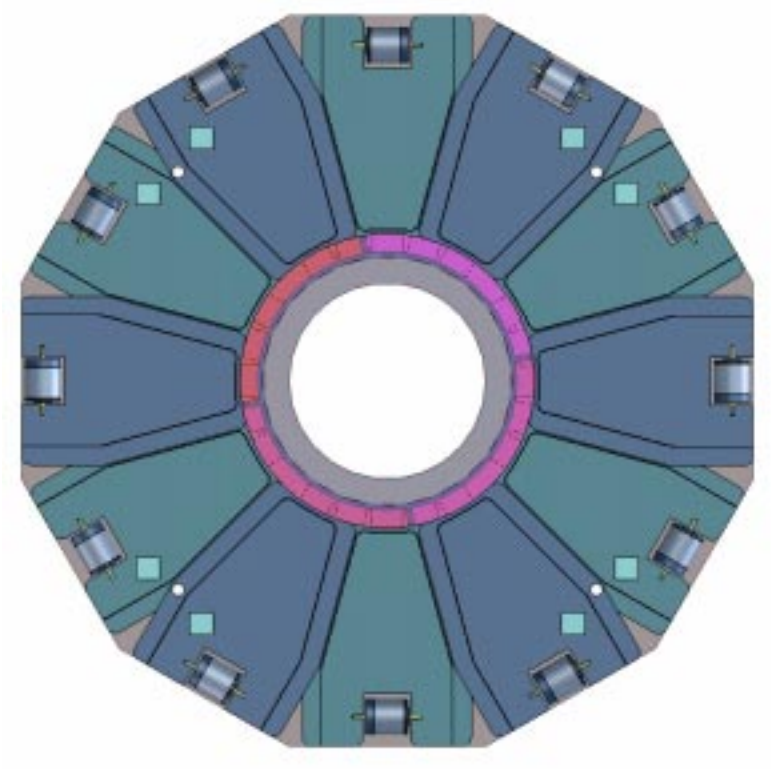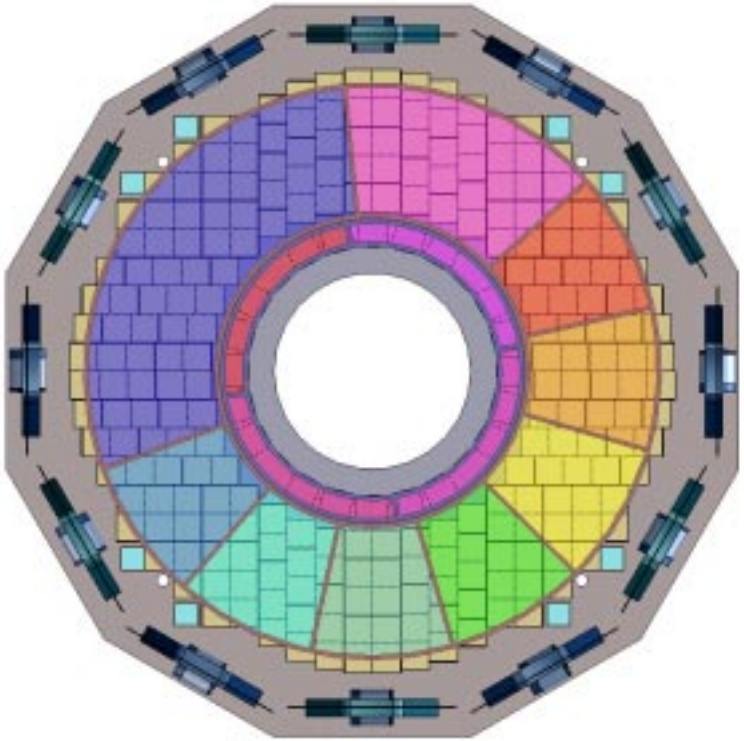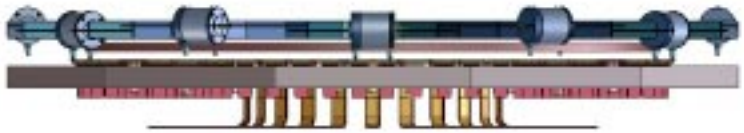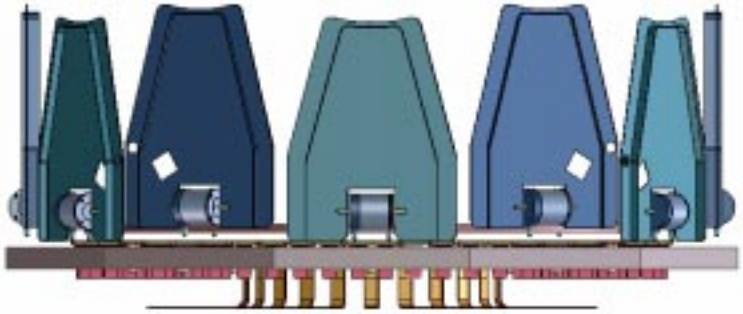
FIDO Shutter Assembly D76