REQ.	ITEM	PART NUMBER	DESCRIPTION
			1/2" Al 6061-T6

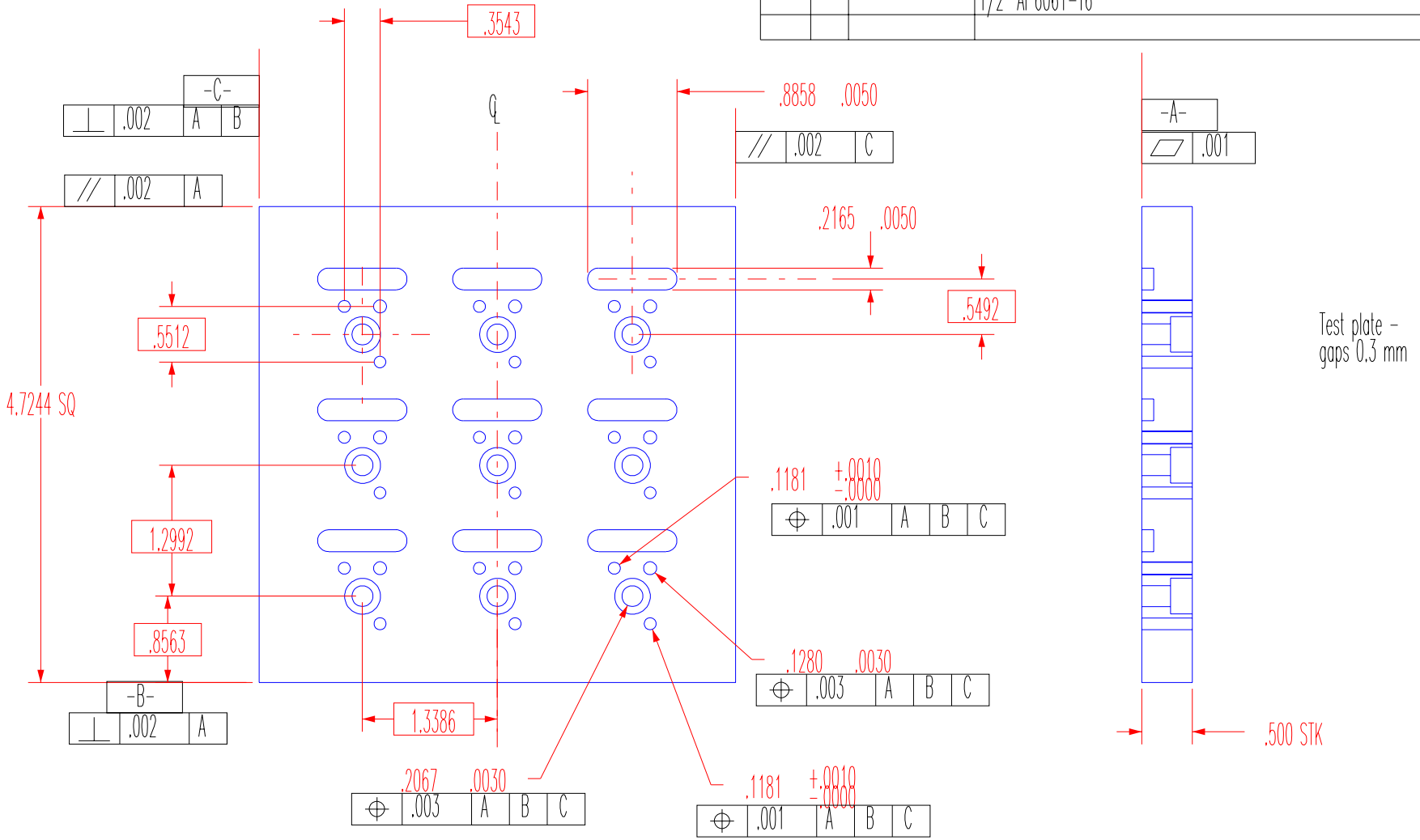

Test plate -
gaps 0.3 mm

REV	DWN	DATE	CHANGES

UNLESS OTHERWISE SPECIFIED

TOLS		
	.XX ,	FRACT,
	.XXX .005	ANGLES
	.XXXX .0020	FINISH 64√

Threads are class 2,
Chamfer ends of all screw threads 30,
Cut 1.5 pitch thr'd,relief with round
nose tool on machine cut threads,
Break edges ,016 max on mach'd work,
Remove burrs, weld spatter, scale,
Reference; ANSI Y14.5

SHOP ORDERS

ACT NO, ROPX70	SER. NO,		
DATE ISS'D	DATE REQ'D	NO. REQ'D 1	
DELIVER TO			
SURFACE TREATMENT			
IDENT, METHOD			
DWN BY JOHN BERCOVITZ		DATE 2001/06/27	
CHK BY		DATE	

LAWRENCE BERKELEY LABORATORY
UNIVERSITY OF CALIFORNIA - BERKELEY

SNAP

Gigacam

2K x 2K thin dummy cold plate

PATENT CLEAR,	DWG. TYPE	SHOWN ON	SCALE 2X	DO NOT SCALE PRINTS
MICROFILMED	DESN ACCT NO	CAT. CODE	DWG. NO.	SIZE 2 / REV

REQ.	ITEM	PART NUMBER	DESCRIPTION
1			Mount for 2K x 2K CCDs (molybdenum)
1 ea			metric stainless dowels, 3D x 14 lg & 13 lg (diamond)

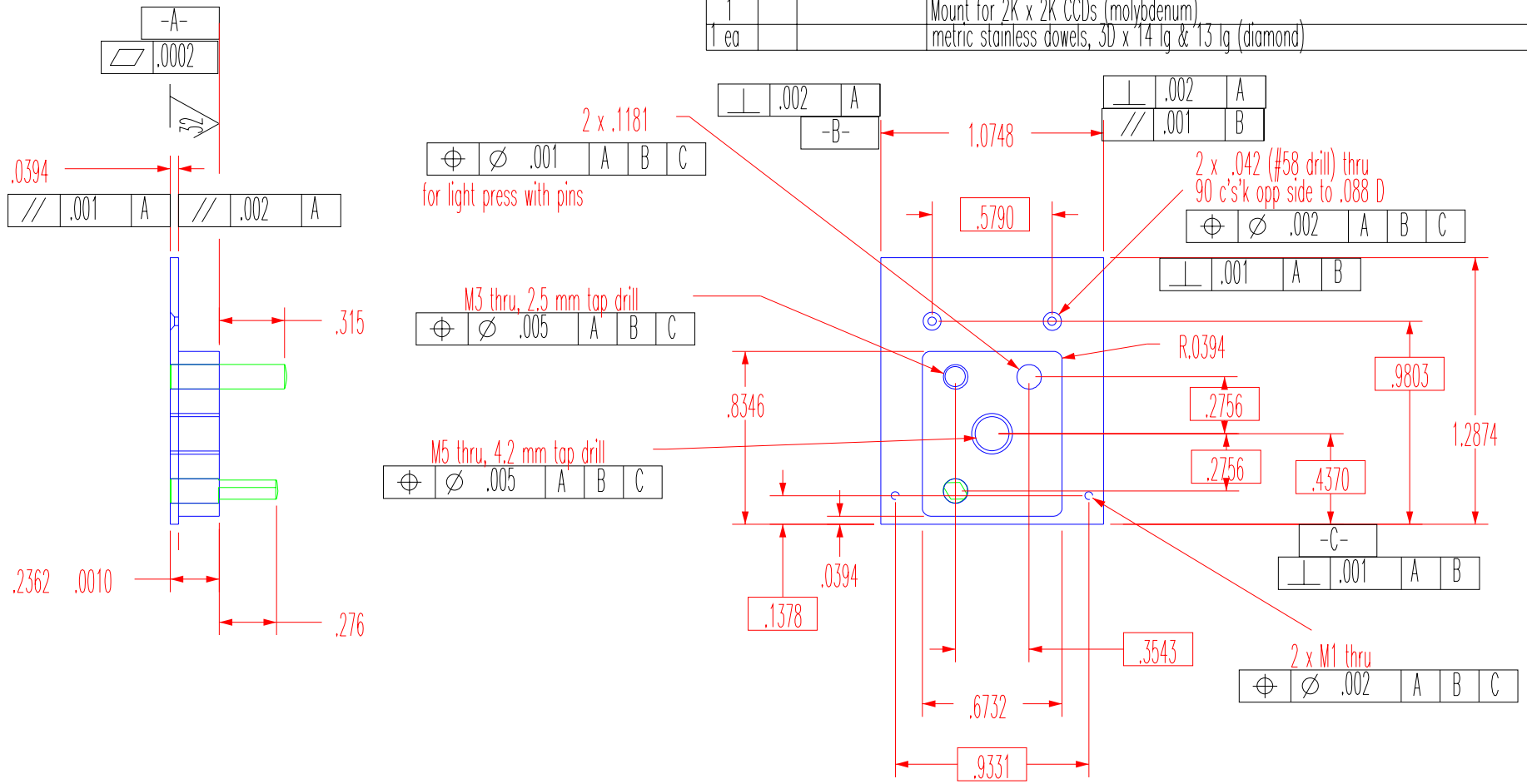

REV	DWN	DATE	CHANGES
A	JHB	2001/04/27	swap pins, change diamond pin length
A	JHB	2001/04/27	move c'bore from mount to cold plate

UNLESS OTHERWISE SPECIFIED

TOL'S		
.XX	,	FRACT,
.XXX	.005	ANGLES
.XXXX	.0020	FINISH 64

Threads are class 2,
Chamfer ends of all screw threads 30,
Cut 1.5 pitch thr'd, relief with round nose tool on machine cut threads,
Break edges .016 max on mach'd work,
Remove burrs, weld spatter, scale,
Reference; ANSI Y14.5

SHOP ORDERS

ACCT NO. ROPX70		SER. NO.	
DATE ISS'D	DATE REQ'D	NO. REQ'D 9	
DELIVER TO			
SURFACE TREATMENT			
IDENT. METHOD			
DWN BY JOHN BERCOVITZ		DATE 2001/06/26	
CHK BY		DATE	

LAWRENCE BERKELEY LABORATORY
UNIVERSITY OF CALIFORNIA - BERKELEY

SNAP
Gigacam
2K x 2K thin mount

PATENT CLEAR.	DWG. TYPE	SHOWN ON	SCALE 2X	DO NOT SCALE PRINTS
MICROFILMED	DESN ACCT NO	CAT. CODE	DWG. NO.	SIZE 2	REV

REQ.	ITEM	PART NUMBER	DESCRIPTION
1			Mount for 2K x 2K CCDs (molybdenum)
1 ea			metric stainless dowels, 3D x 14 lg & 13 lg (diamond)

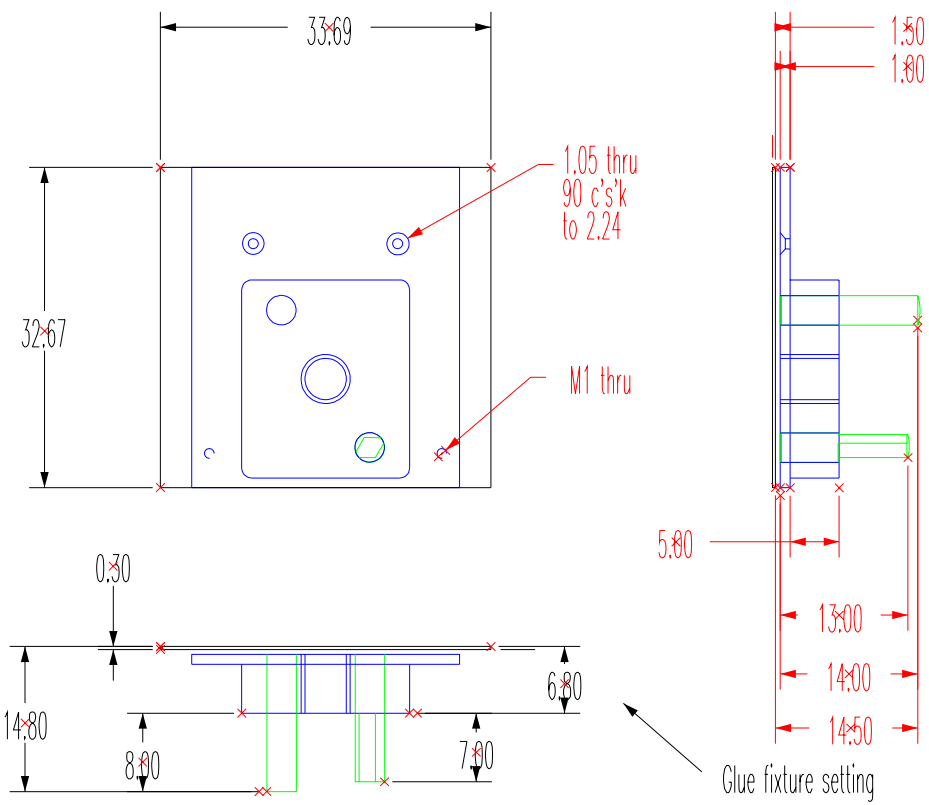

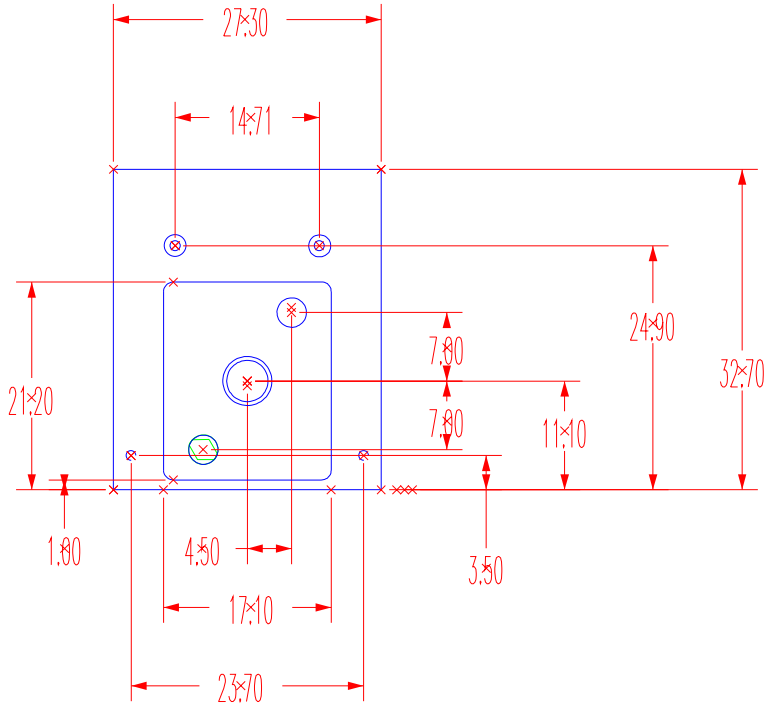

Note:
Mount is 32.7 to match
PC board. CCD is 32.67

REV	DWN	DATE	CHANGES
A	JHB	2001/04/27	swap pins, change diamond pin length
A	JHB	2001/04/27	move c'bore from mount to cold plate

UNLESS OTHERWISE SPECIFIED
TOLS: .XX , FRACT, .XXX ANGLES, .XXXX .0020 FINISH 64√

Threads are class 2.
Chamfer ends of all screw threads 30.
Cut 1.5 pitch thr'd relief with round nose tool on machine cut threads.
Break edges .016 max on mach'd work.
Remove burrs, weld spatter, scale.
Reference; ANSI Y14.5

SHOP ORDERS
ACCT NO. ROPX70 SER. NO.
DATE ISS'D DATE REQ'D NO. REQ'D 1
DELIVER TO
SURFACE TREATMENT
IDENT. METHOD
DWN BY JOHN BERCOVITZ DATE 2001/06/12
CHK BY DATE

LAWRENCE BERKELEY LABORATORY
UNIVERSITY OF CALIFORNIA - BERKELEY

SNAP
Gigacam
2K x 2K thin mount

PATENT CLEAR. DWG. TYPE SHOWN ON SCALE 2X DO NOT SCALE PRINTS
MICROFILMED DESN ACCT NO CAT. CODE DWG. NO. SIZE 2 REV

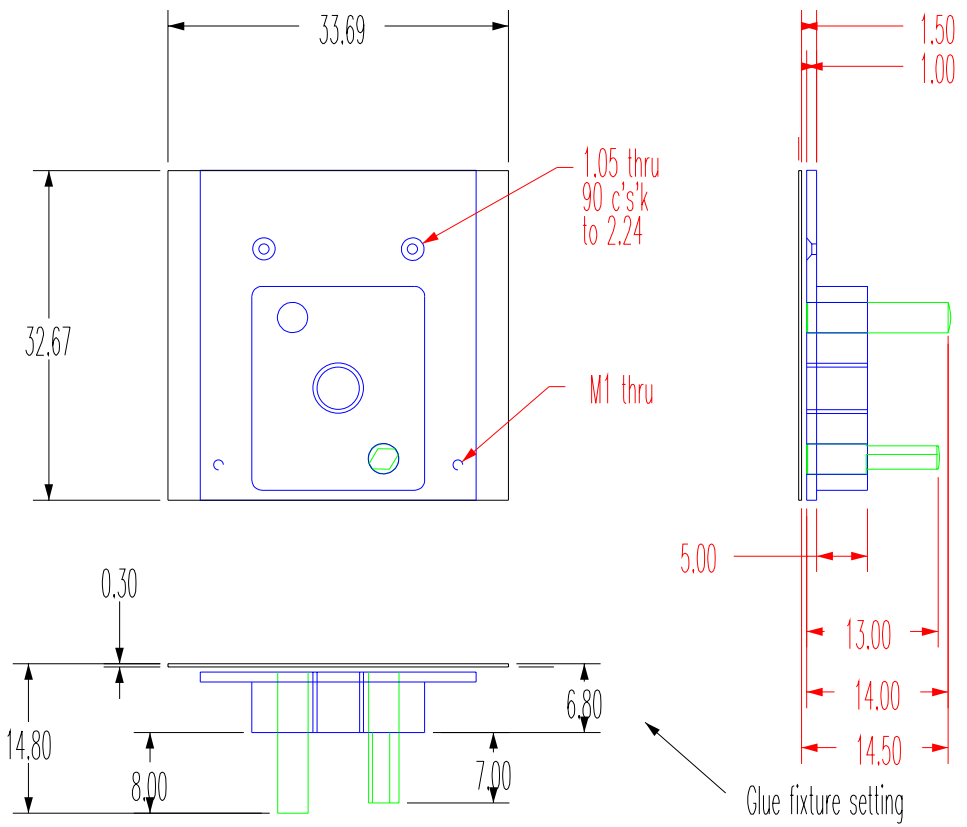

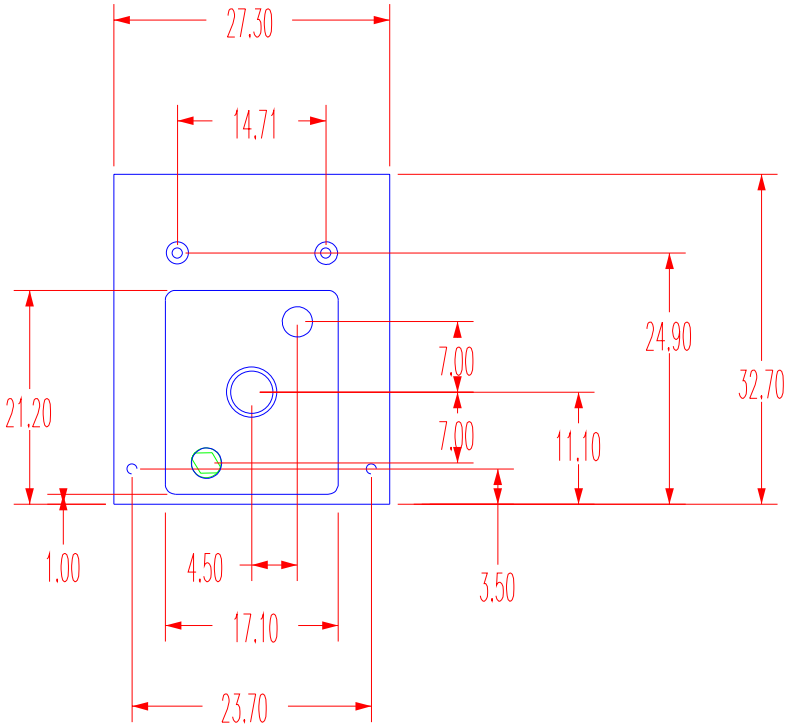

Mount is 32.7 to match PC board

DATE

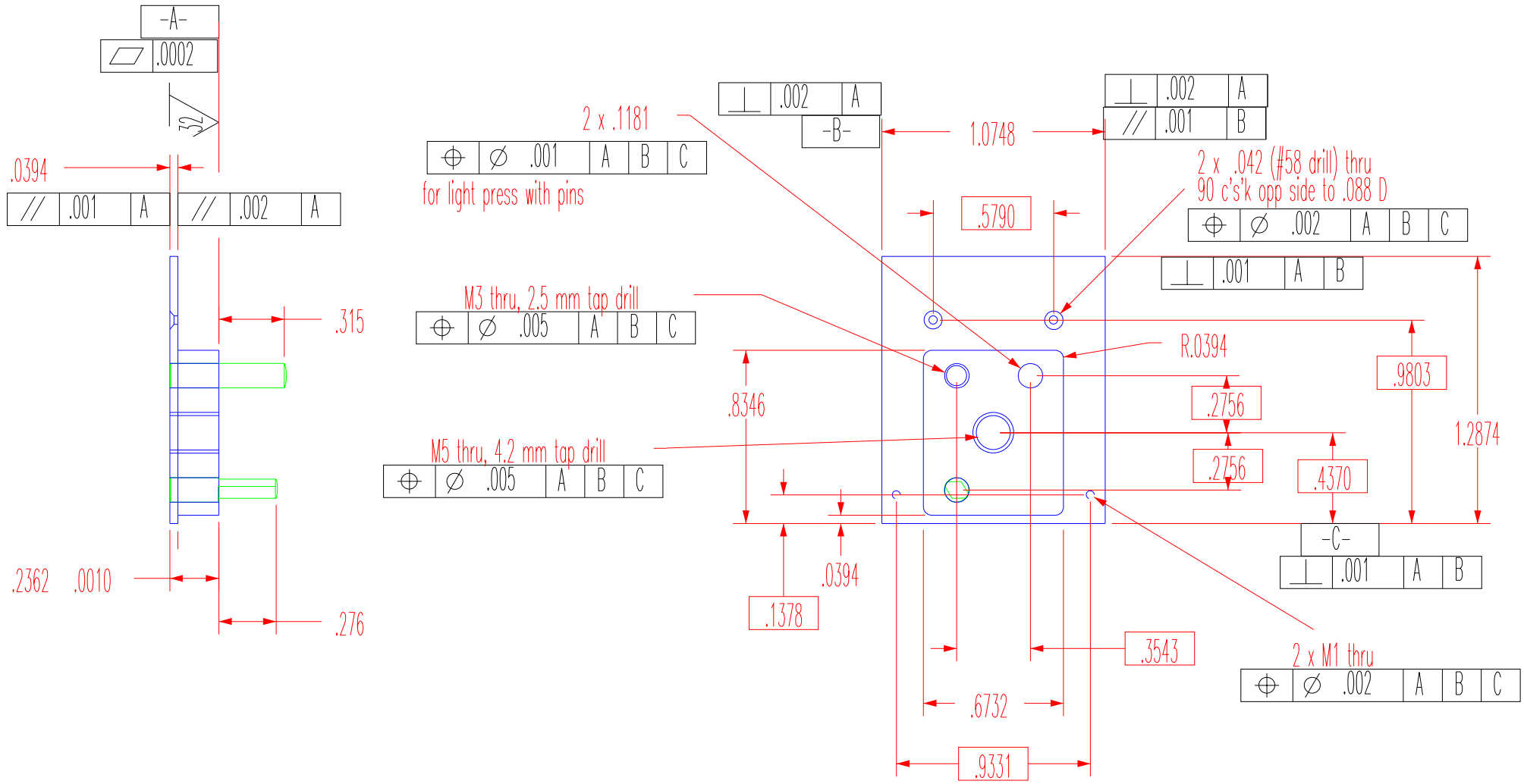
-A-
.0002
32
.0394
// .001 A
// .002 A
.315
.2362
.0010
.276
2 x .1181
⌖ ∅ .001 A B C
for light press with pins
M3 thru, 2.5 mm tap drill
⌖ ∅ .005 A B C
M5 thru, 4.2 mm tap drill
⌖ ∅ .005 A B C
⊥ .002 A
-B-
1.0748
⊥ .002 A
// .001 B
2 x .042 (#58 drill) thru
90 c'sk opp side to .088 D
⌖ ∅ .002 A B C
.5790
⊥ .001 A B
R.0394
.9803
.8346
.2756
.2756
1.2874
.4370
-C-
⊥ .001 A B
.0394
.1378
.3543
2 x M1 thru
⌖ ∅ .002 A B C
.6732
.9331

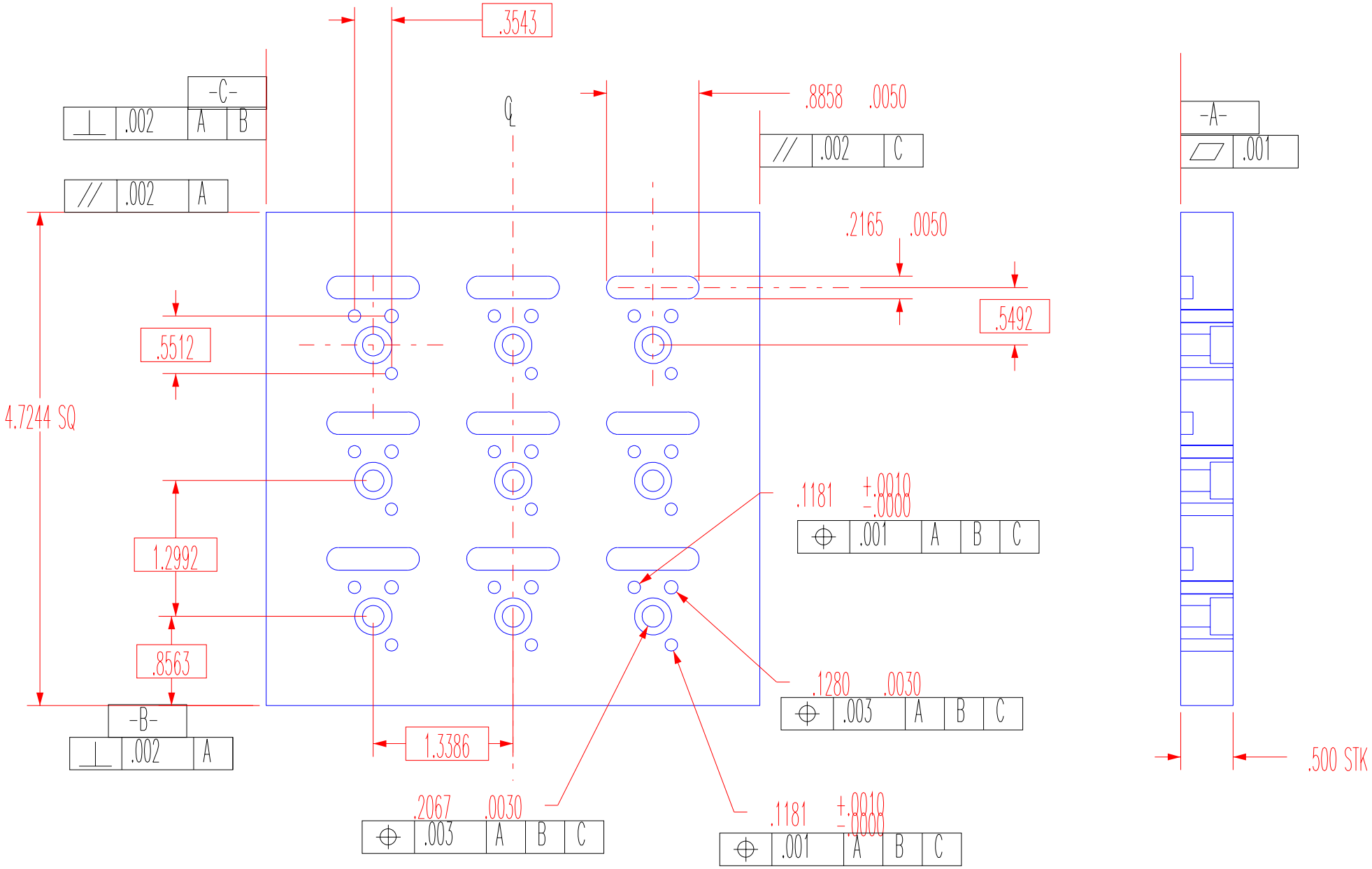
.3543
-C-
⊥ .002 A B
// .002 A
℄
.8858 .0050
// .002 C
-A-
▱ .001
.2165 .0050
.5492
.5512
4.7244 SQ
.1181 +.0010 -.0000
⊕ .001 A B C
1.2992
.8563
.1280 .0030
⊕ .003 A B C
-B-
⊥ .002 A
1.3386
.500 STK
.2067 .0030
⊕ .003 A B C
.1181 +.0010 -.0000
⊕ .001 A B C

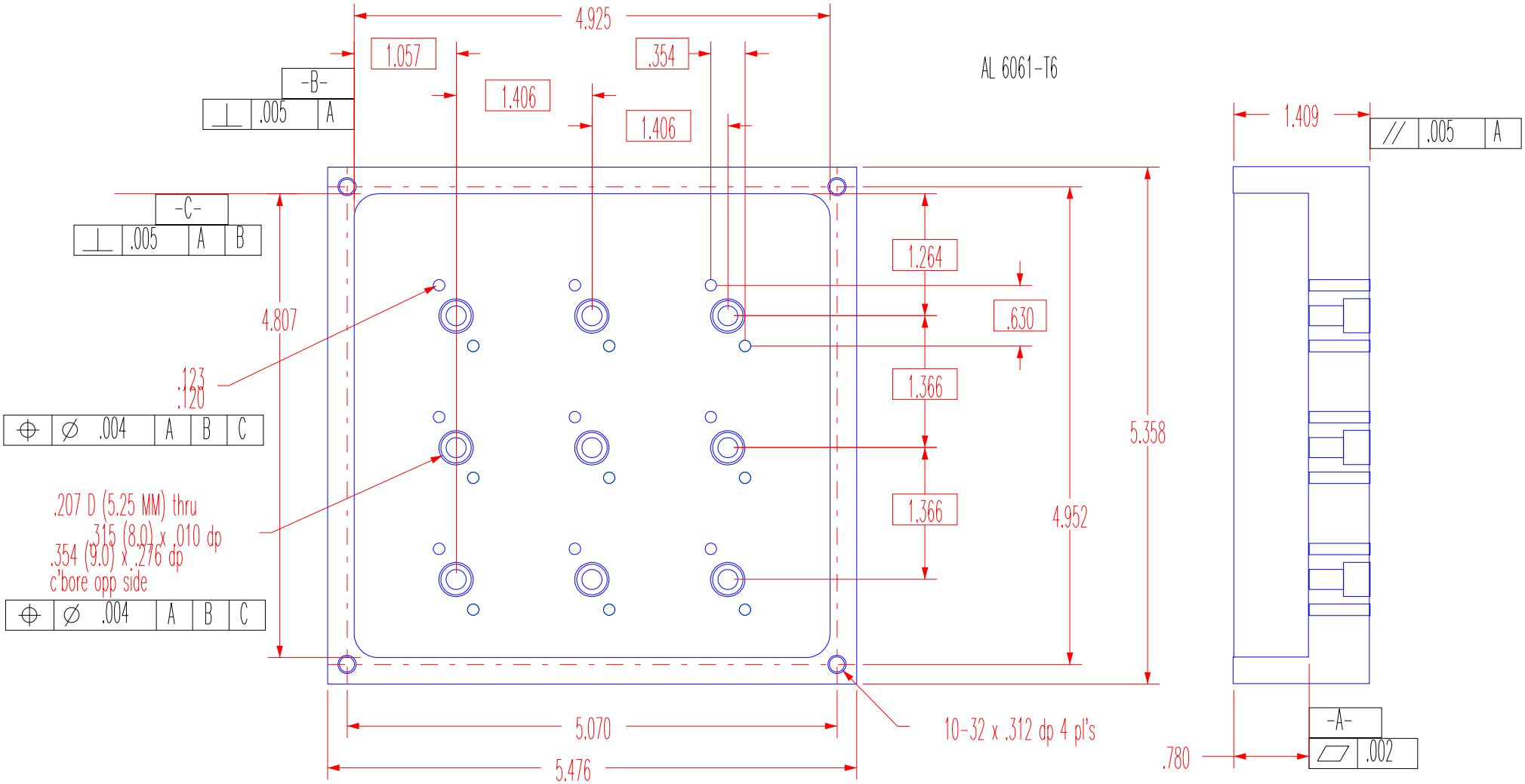

Gigacam
2K x 2K transport box

2X