REVISIONS				
ZONE	REV.	DESCRIPTION	DATE	APPROVED

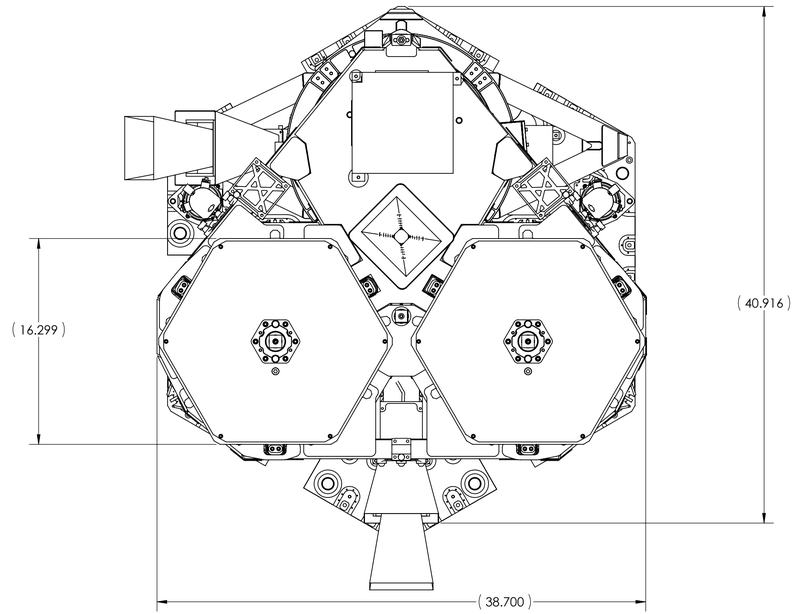

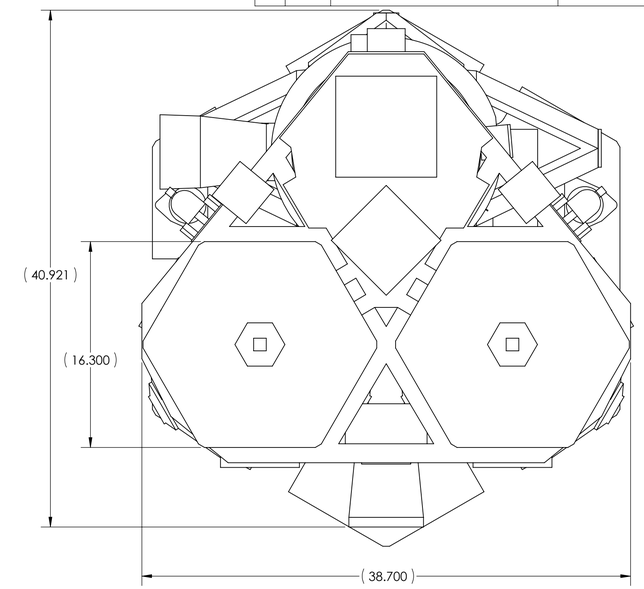

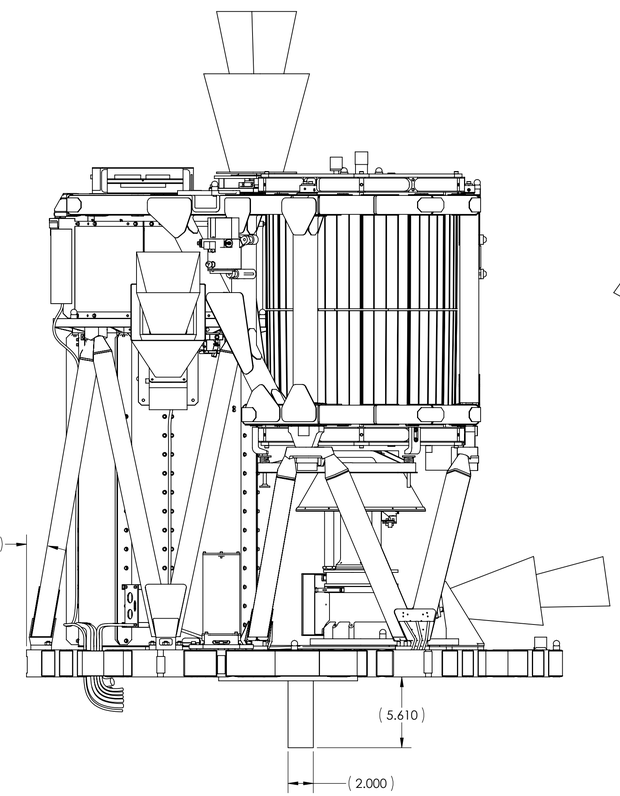

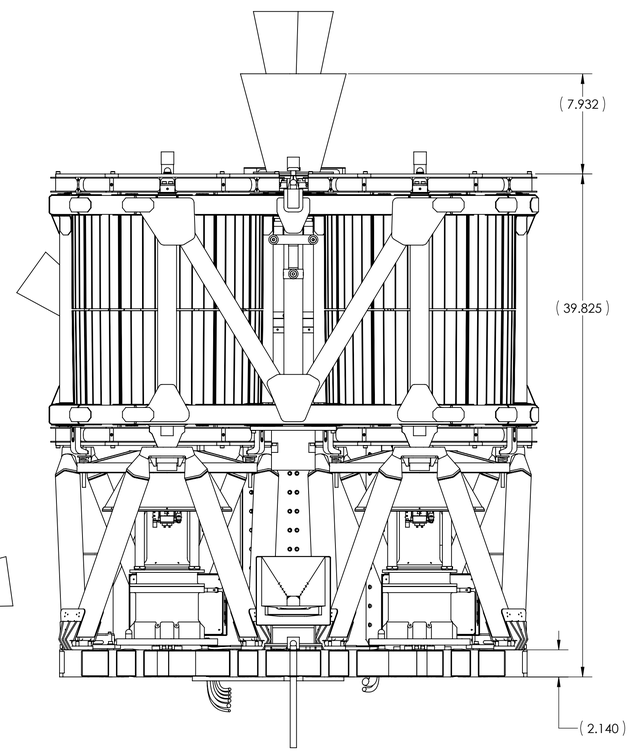

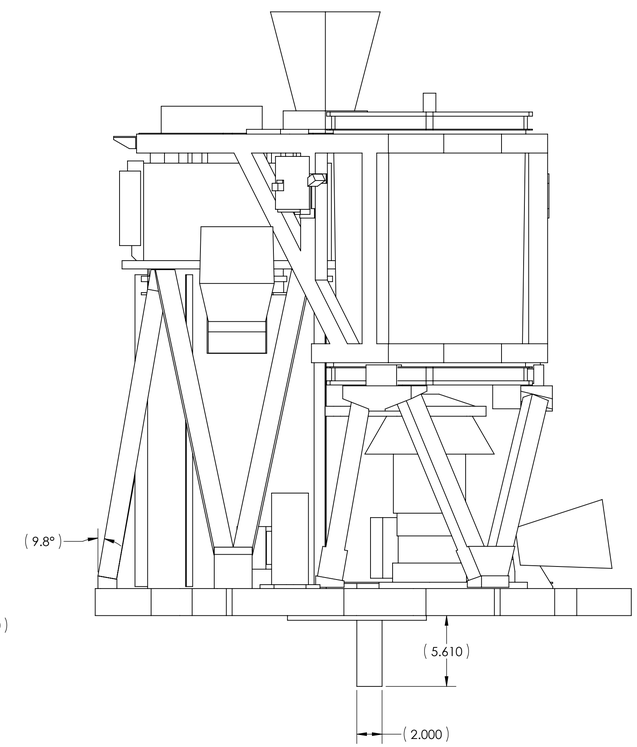

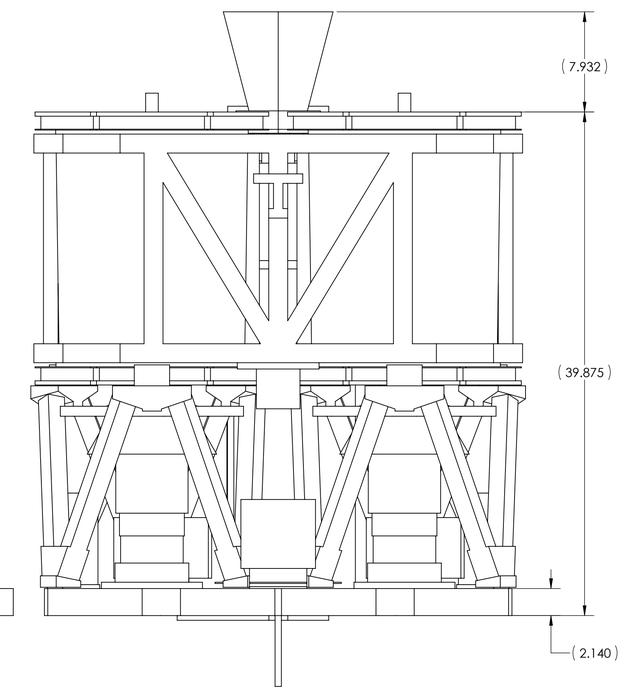

PROPRIETARY AND CONFIDENTIAL

THE INFORMATION CONTAINED IN THIS DRAWING IS THE SOLE PROPERTY OF CALWEST ENGINEERING. ANY REPRODUCTION IN PART OR AS A WHOLE WITHOUT THE WRITTEN PERMISSION OF CALWEST ENGINEERING IS PROHIBITED.

NEXT ASSY	USED ON
APPLICATION	

UNLESS OTHERWISE SPECIFIED:

DIMENSIONS ARE IN INCHES
TOLERANCES:
FRACTIONAL ±
ANGULAR: MACH ± BEND ±
TWO PLACE DECIMAL ±
THREE PLACE DECIMAL ±

INTERPRET GEOMETRIC TOLERANCING PER:

MATERIAL

FINISH

DO NOT SCALE DRAWING

	NAME	DATE
DRAWN	JONG	08/27/09
CHECKED	DECKER	08/27/09
ENG APPR.		
MFG APPR.		
Q.A.		

COMMENTS:

CALWEST ENGINEERING

TITLE:

STOWED INSTRUMENT ASSY
COMPARISON LAYOUT

SIZE	DWG. NO.	REV
D	CWE 09-XXXXX	A

SCALE: WEIGHT: SHEET 1 OF 1

STOWED INSTRUMENT LAYOUT

08/27/09