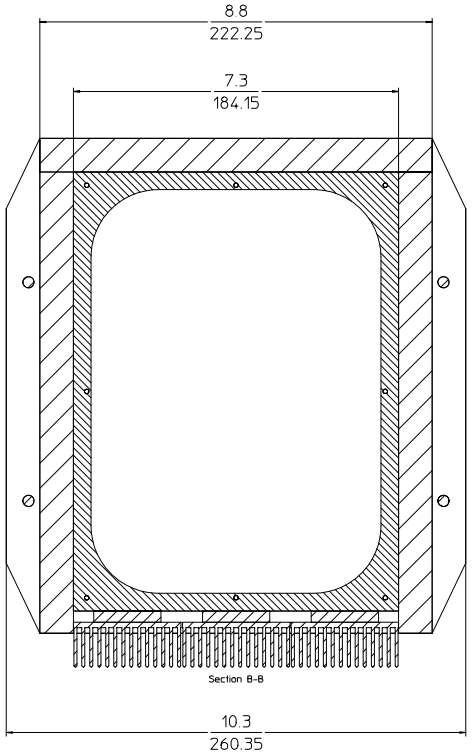

Section B-B

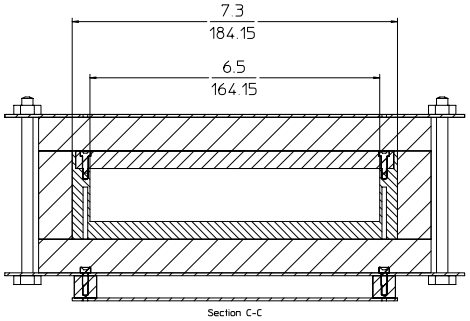

Section C-C

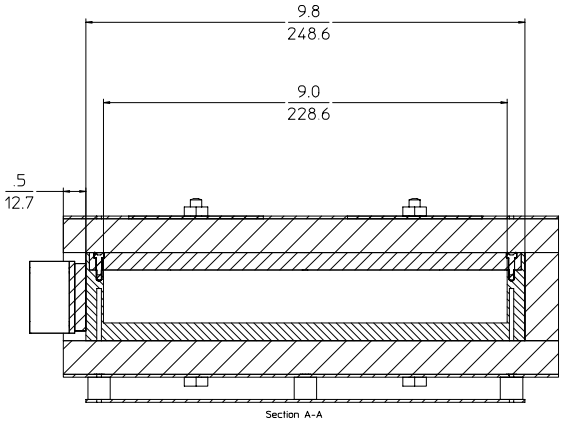

Section A-A

USE RANGE	TOLERANCE	SURFACE	ARCHIVE	SCALE 1/1	
			MATERIAL		
	DATE	NAME	DESCRIPTION		
	DRAWN		Basic Box Layout		
	APPR.				
	R.S.				
	Co|Create		DRAWING-NUMBER BoxPACKAGE	SHEET 1 OF 1	
INDEX DESCRIPTION DATE NAME	ORIGINAL		LEXCH.F.	LEXCH.TH.	