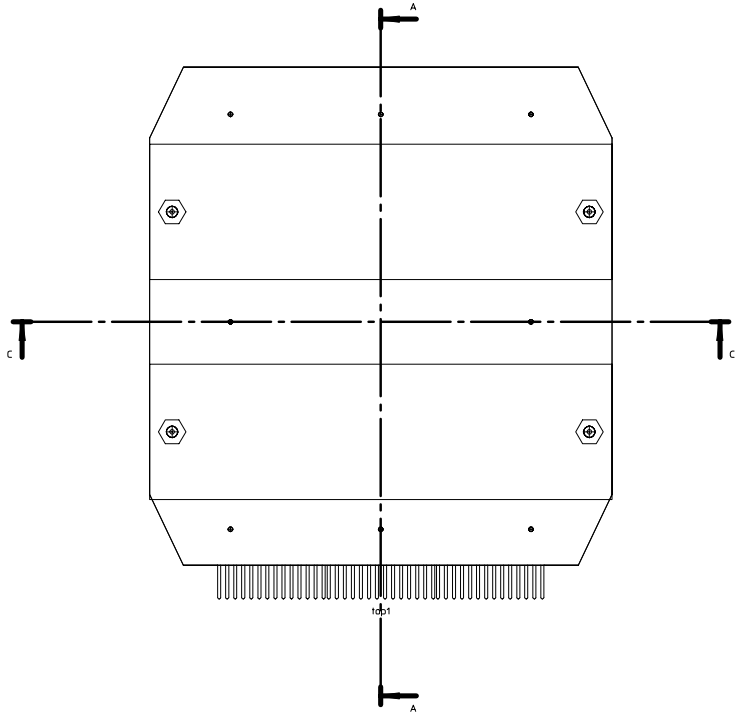

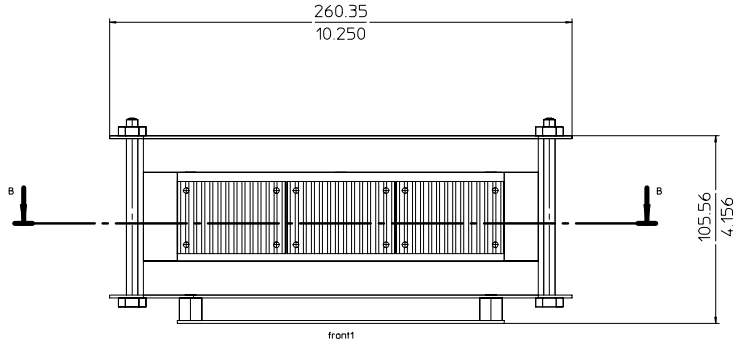

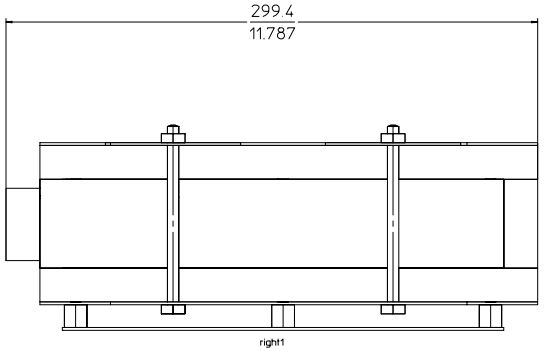

USE RANGE			TOLERANCE		SURFACE	ARCHIVE	SCALE 1/1
						MATERIAL	
				DATE	NAME	DESCRIPTION	
			DRAWN			Basic Box Layout	
			APPR.				
			ALG.				
			Co|Create			DRAWING-NUMBER Box-PACKAGE	SHEET 1 OF 1
INDEX	DESCRIPTION	DATE	NAME	ORIGINAL		LEXICALF.	LEXICALTH.