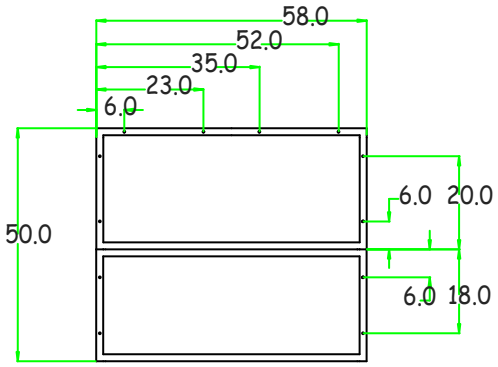


top1

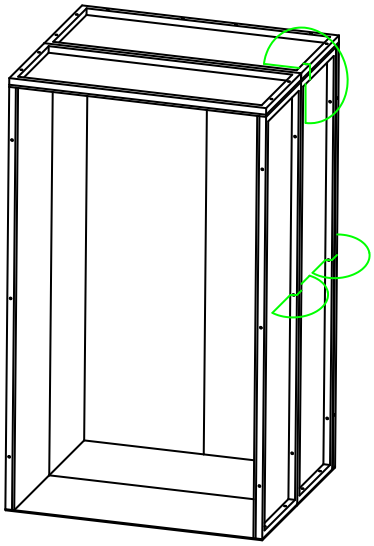

gen1

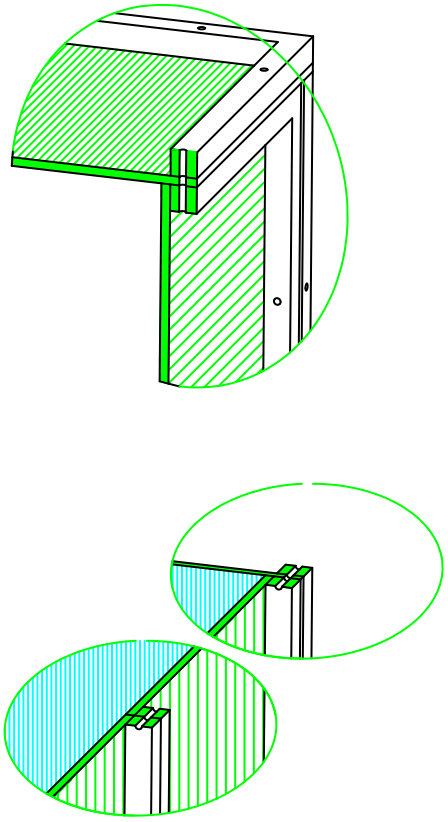

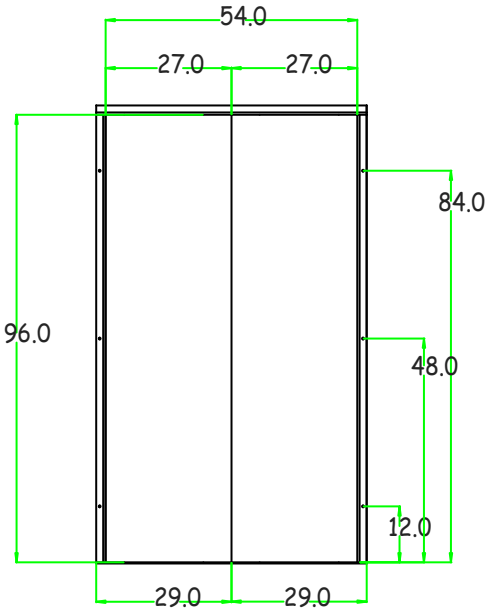


front1

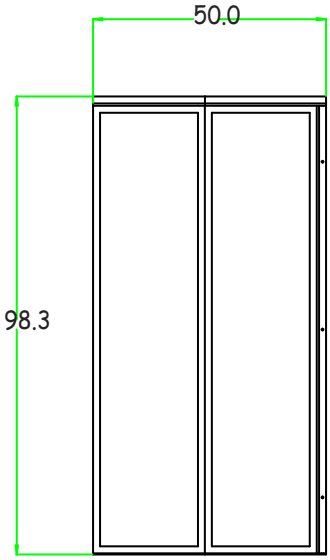


right1

File: Kiosk.dxf
Date: 9-Apr- 101 17:28:45
Author: lafever
Dir: //me56/lafever/mosaic/DesignWorks