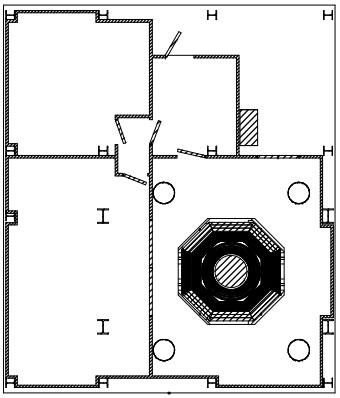

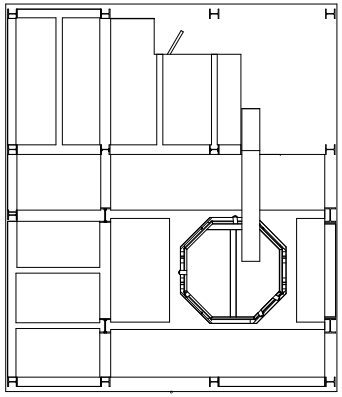

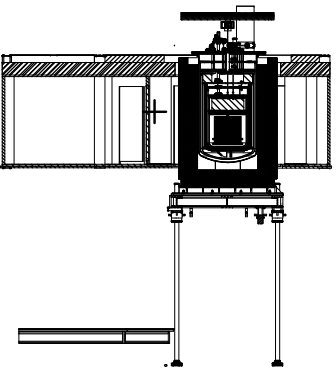

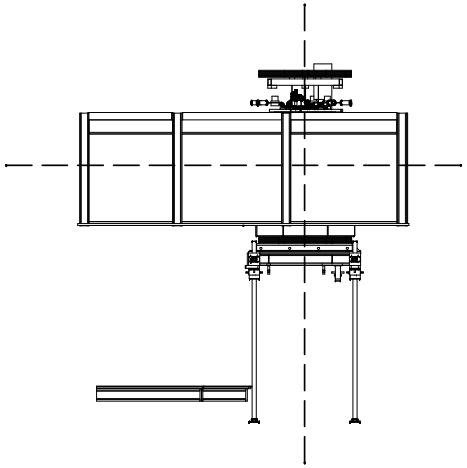

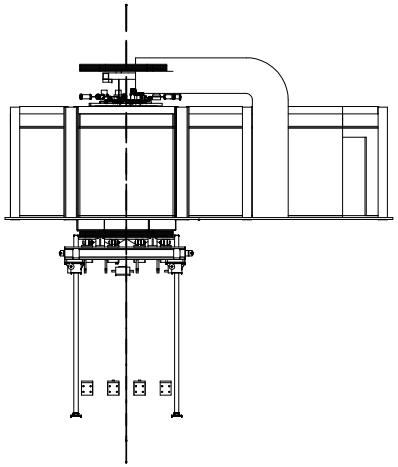

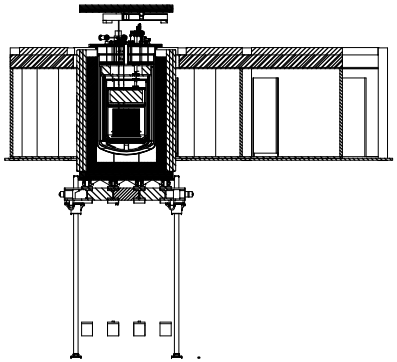

CleanRoom-Generic.dxf