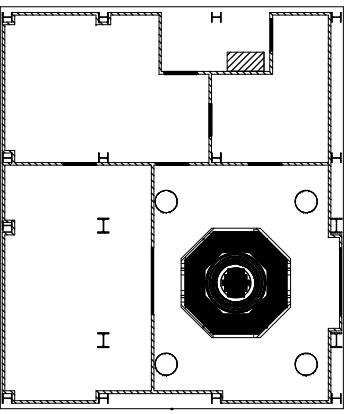

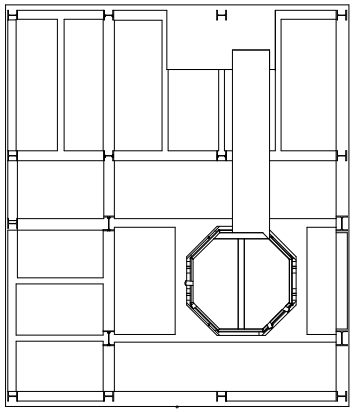

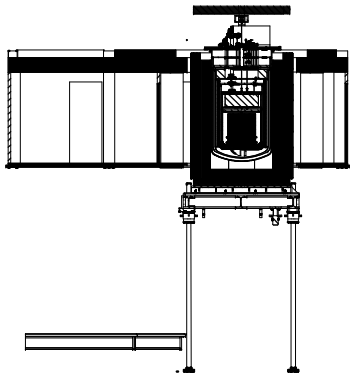

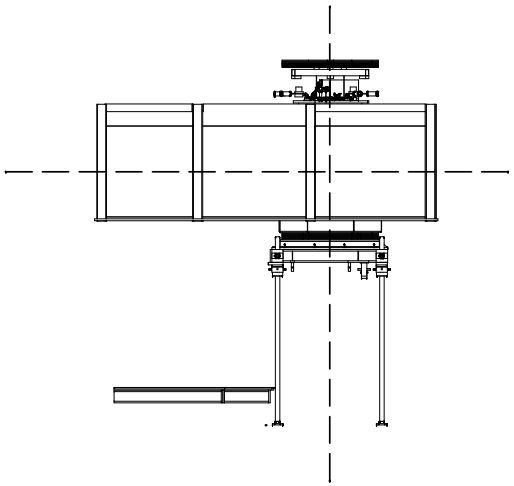

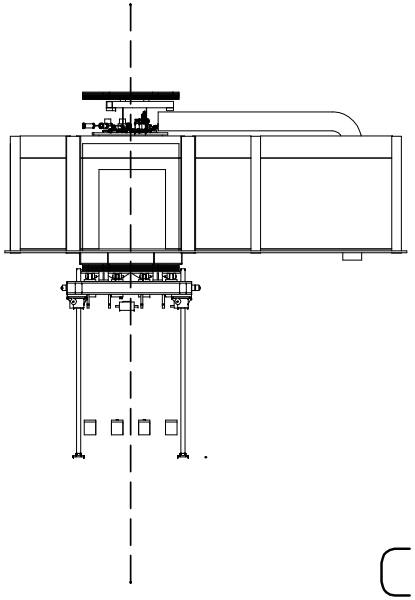

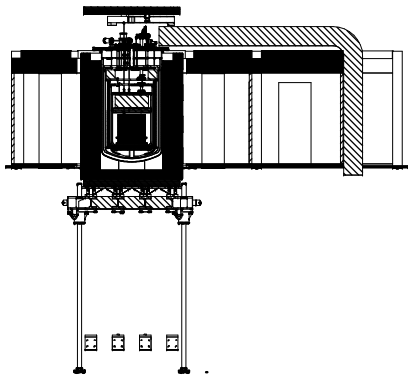

CleanRoom-D.dxf