Fiber Connector Costs

MTP connector flatness

Durham ferrule design

Slit Assembly Details

MIL Fiber Connector Costs

GLENAIR GHD

MATERIALS ONLY – two connection pairs

FIBER CABLES 10 spectrog X 10 connectors @ 52 fibers per connector + 20% spare
Materials only (ferrules, plugs, sockets) $300 k

FIBER ENDs for 12 X slits and 6000 science fibers
Materials only (ferrules) $300 k

TOTAL MATERIALS ONLY $600 k

ASSEMBLED by Glenair (customer supplied fiber)

FIBER CABLES 10 spectrog X 10 connectors @ 52 fibers per connector + 20% spare
$500 k

FIBER ENDS – make 6000 segments, termini each end $645 k
cut 1/2 for slit, 1/2 for actuator, plus plugs and sockets

TOTAL Assembled Fibers $1.15 M

Other Fiber Connector Costs

Other connector types...

MATERIALS ONLY **one connection pair (e.g. at the spectrograph only) for 6000 fibers**

~$ 25 k **32-pin MTP connectors (Apogee / Sloan type) + Polishing Costs**

~$ 15 - 50 k **$15-50k splice equipment**
+ Splicing Technician
(3 m./splice, 6000 = 38 x 8 hours days)

~$ 150 k **pre-made splice connectors + Splicing**

Durham ferrule design

Assy Drawings in progress

Ferrule to Strain Relief junction
- Steel, Kapton, Glass
- Bonding voids ...

ISOMETRIC VIEW (10 : 1

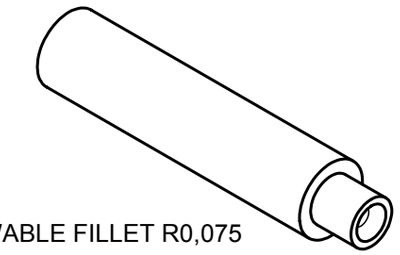

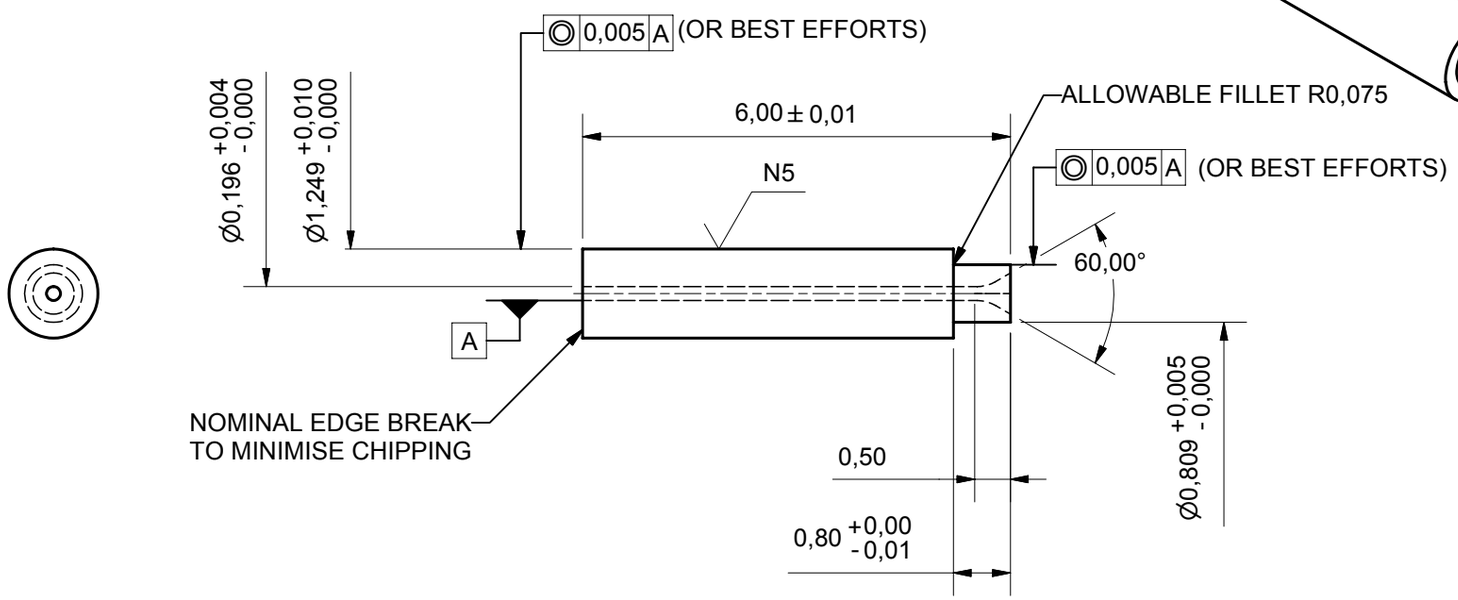

ISOMETRIC VIEW (20 : 1)

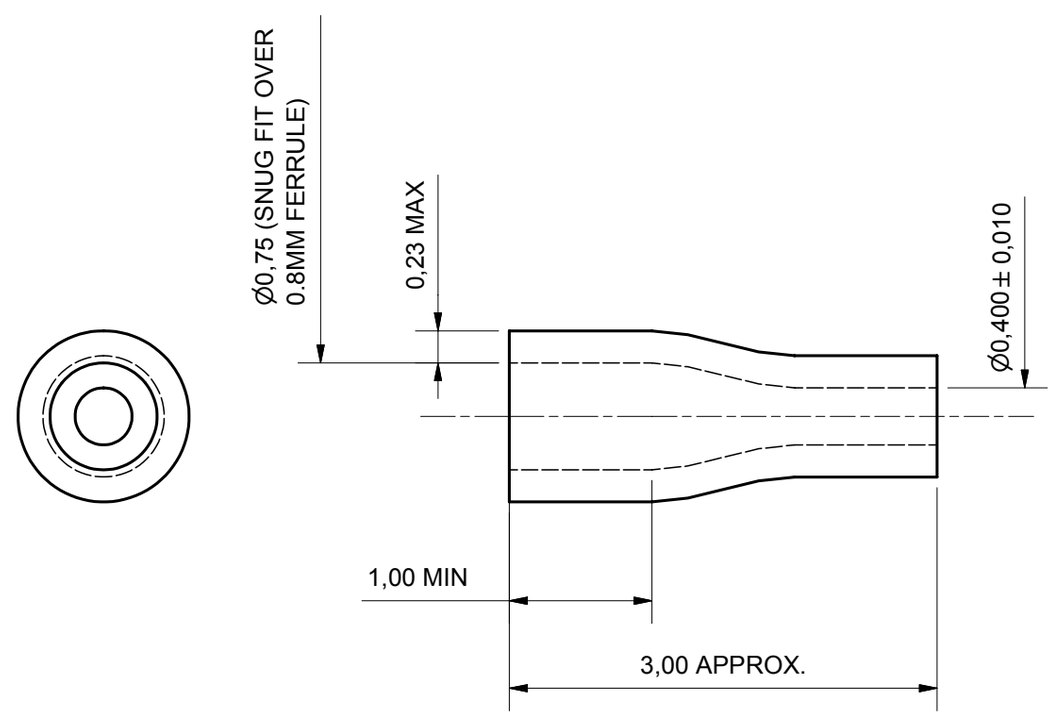

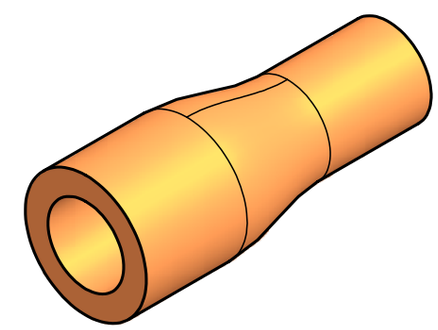

Slit Assembly

Groove design

Materials discussion
- Glass machined
- Metal EDM
- Plastic molded

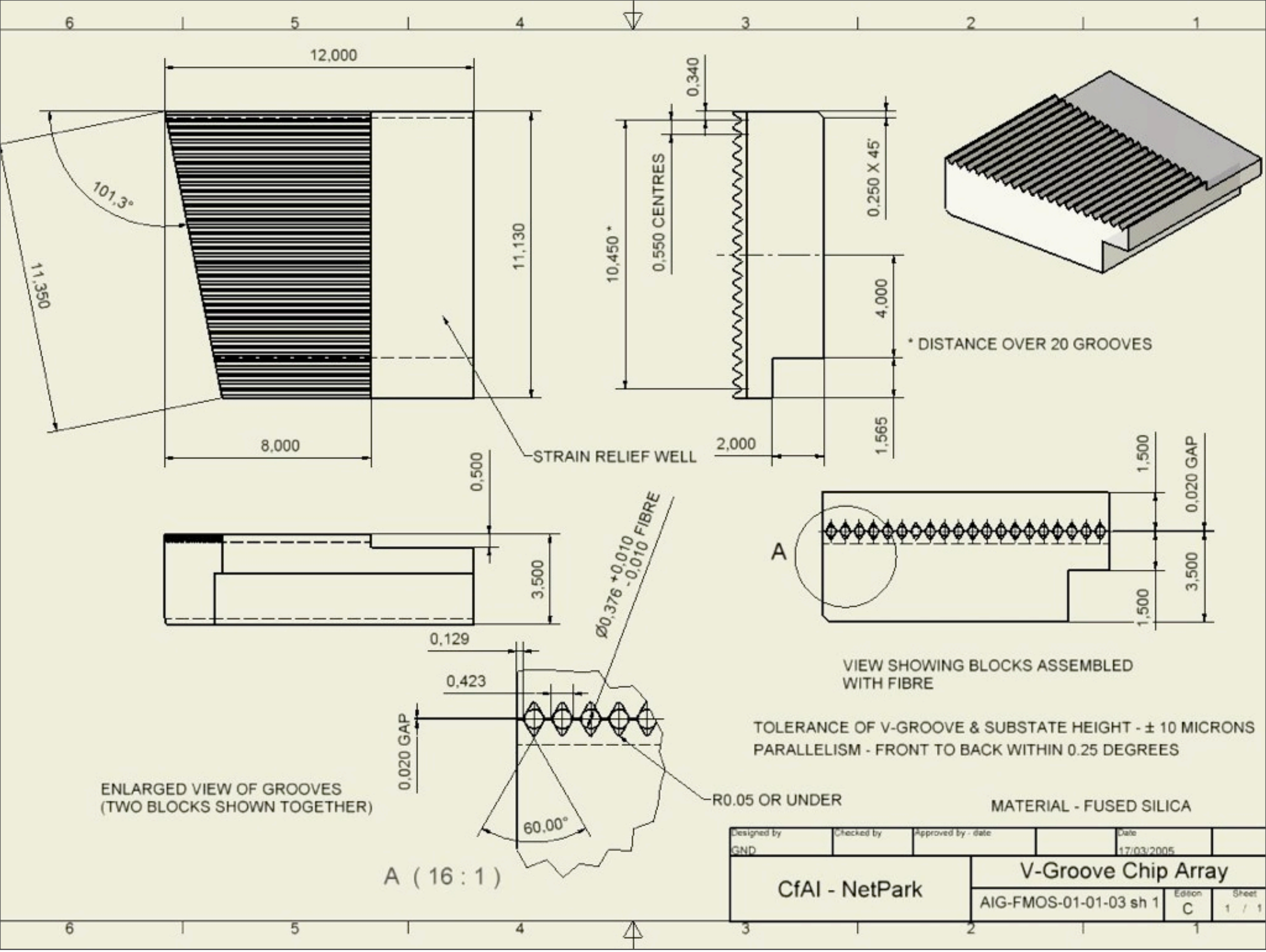
12,000
101,3°
11,350
11,130
8,000
STRAIN RELIEF WELL
0,340
10,450 *
0,550 CENTRES
0,250 X 45°
4,000
1,565
2,000
* DISTANCE OVER 20 GROOVES
0,500
3,500
1,500
0,020 GAP
A
VIEW SHOWING BLOCKS ASSEMBLED
WITH FIBRE
Ø0,376 +0,010 -0,010 FIBRE
0,129
0,423
0,020 GAP
60,00°
R0.05 OR UNDER
ENLARGED VIEW OF GROOVES
(TWO BLOCKS SHOWN TOGETHER)
A (16 : 1)
TOLERANCE OF V-GROOVE & SUBSTATE HEIGHT - ± 10 MICRONS
PARALLELISM - FRONT TO BACK WITHIN 0.25 DEGREES
MATERIAL - FUSED SILICA
Designed by GND
Checked by
Approved by - date
Date 17/03/2005
CfAI - NetPark
V-Groove Chip Array
AIG-FMOS-01-01-03 sh 1
Edition C
Sheet 1 / 1

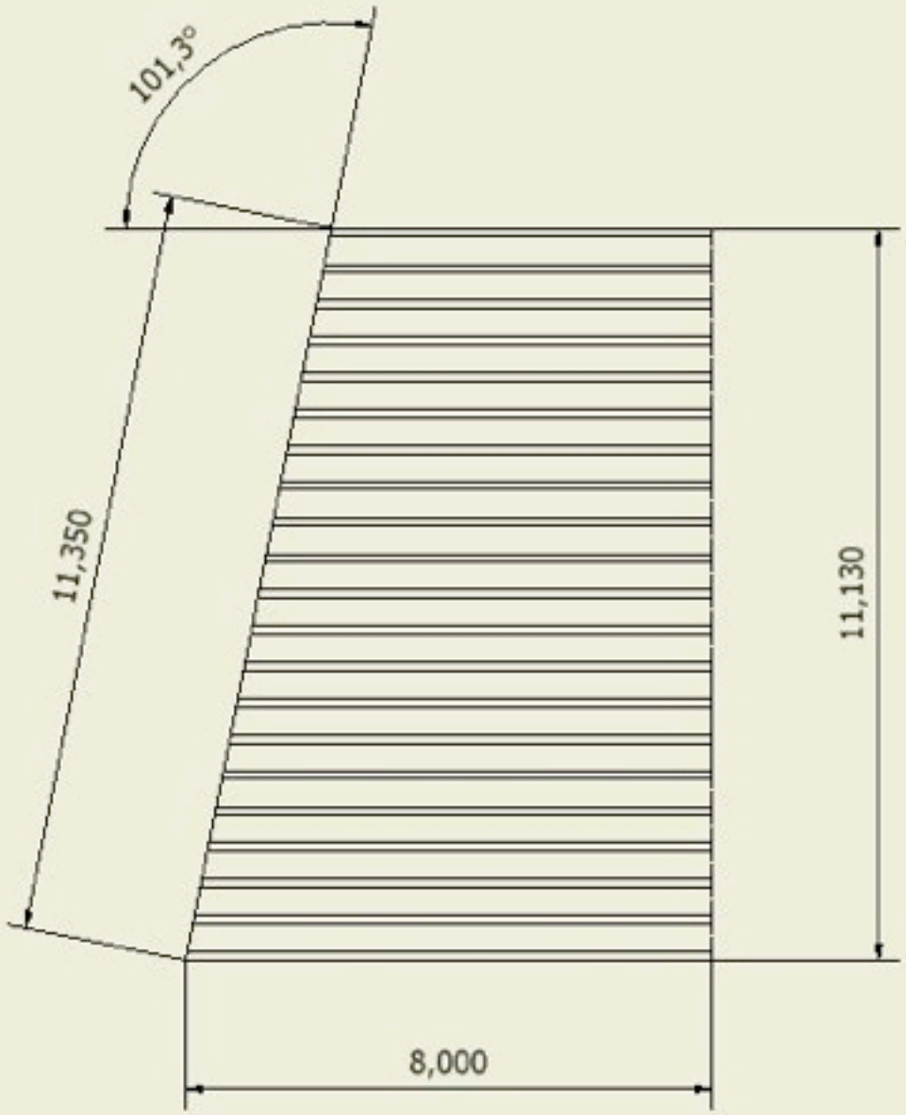

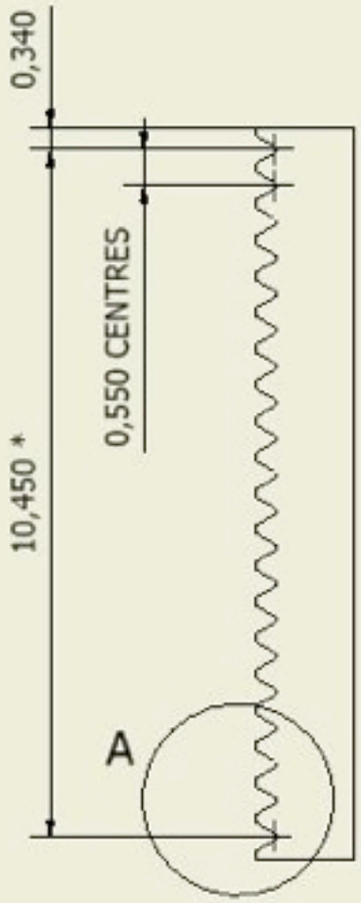

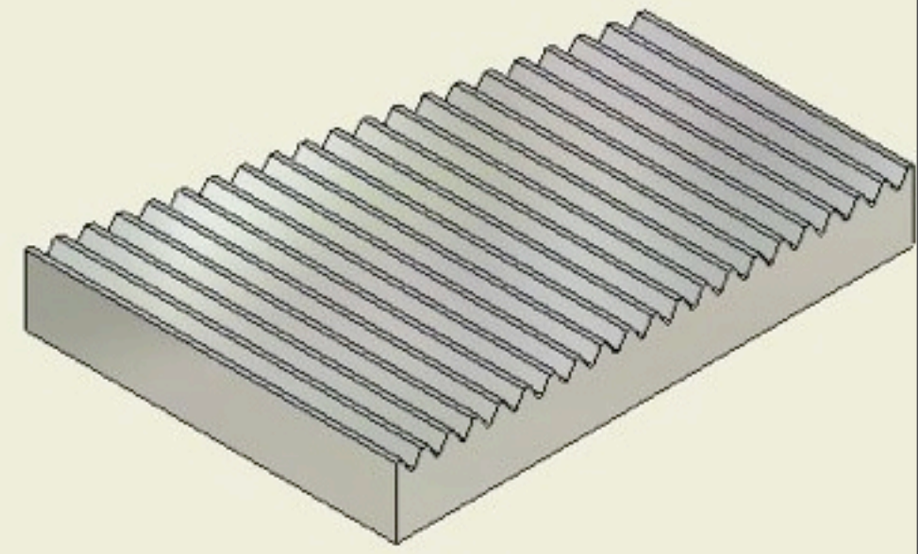

* DISTANCE OVER 20 GROOVES

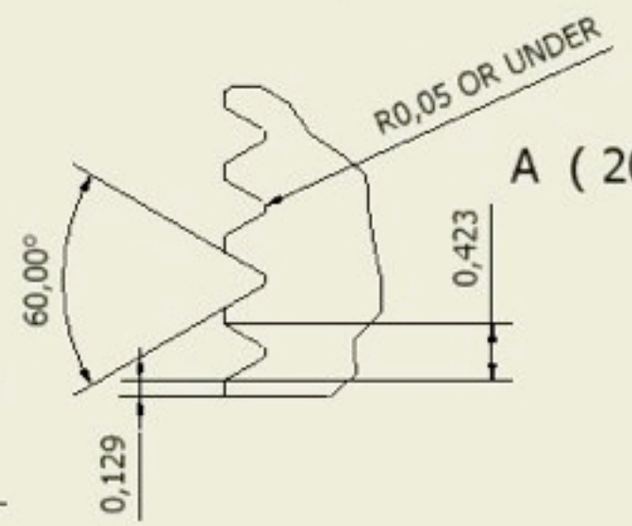

A (20 : 1)

MATERIAL - FUSED SILICA

Designed by	Checked by	Approved by	Date		Date	
GND					17/03/2005	

CfAI - NetPark	V-Groove Chip Top		
	AIG-FMOS-01-01-03 SH 2	Edition A	Sheet 1 / 1

DO NOT SCALE

THIRD ANGLE PROJECTION

A3

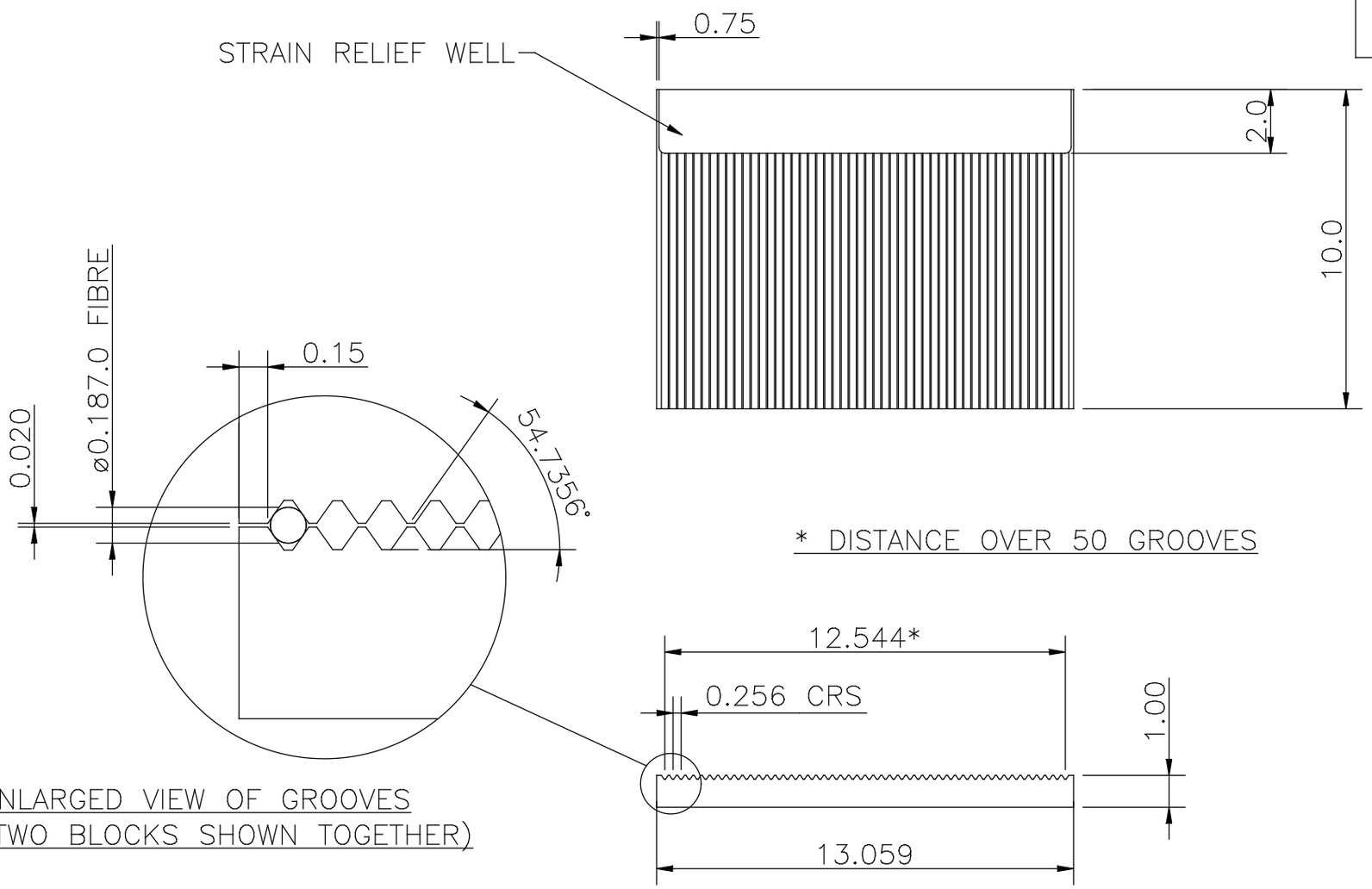

DRG. TITLE: V–GROOVES FOR GMOS IFU OUTPUT BLOCK

ISSUE	REVISION	DRN	DATE
C	THICKNESS 1.00 WAS 0.525	GD	09/03/00
B	RE–DESIGNED AS SILICON BLOCK	GD	21/02/00

ALL DIMENSIONS IN MM UNLESS OTHERWISE STATED

IMPLIED TOLERANCES
X (OVER 100) ±0.20
X (UP TO 100) ±0.1
X.X ±0.10
X.XX ±0.05

Material: SILICON

Quantity: 70 OFF

SCALE 5:1

DRAWN BY: G.D

APP'D BY:

DATE 21/02/00

ASTRONOMICAL INSTRUMENTATION GROUP
DURHAM UNIVERSITY, PHYSICS DEPARTMENT
SCIENCE LABS, SOUTH ROAD, DURHAM, DHI 3LE
TEL. (0191) 374 2107 & 2108

DRAWING No. 35a45

REV. C